CHAPTER 10 - MISCELLANEOUS DOCUMENTS

10.1 MISCELLANEOUS DOCUMENTS INDEX

State Environmental Policy Act (SEPA) Checklist
SEPA Determination of Non-Significance (DNS)
2013 Water Facility Inventory
Local Government Consistency Review Checklist(s)
Water Use Efficiency (WUE) Program
WUE Program Goal Adoption
Water System Plan Consumer Input Process
City of Zillah Municipal Code
- Chapter 13.08 - Water Systems
- Chapter 13.18 - Utility Standards for Urban Growth Areas
- Chapter 13.28 - Reduction in Water Billings Due to Leaks
- Chapter 13.30 - Utility Reimbursement Agreements
- Chapter 13.34 - Utility Tax Discount
- Chapter 13.38 - Infrastructure Improvement Program

Extension by Developers Policy
Water Rights
- Rainier Well
- Rainier Well Application
- 3rd Avenue Well
- WIPPCO Well
- 3rd Avenue Well and WIPPCO Well
- Superseding Permit G4-29702P
- Permit G4-29702P Aquifer Designation Memorandum

Well Logs
- Rainier Well
- 3rd Avenue Well

Protective Covenants
- WIPPCO Well

Susceptibility Assessment Survey Forms
- Rainier Well
- 3rd Avenue Well
- WIPPCO Well

USGS Groundwater Status and Trends for the Columbia Plateau Regional Aquifer System, Washington, Oregon, and Idaho
Zillah Wellhead Protection Plan
Cross-Connection Control Manual
2013 Consumer Confidence Report
Current Water Quality Monitoring Report
Coliform Monitoring Plan
Inorganic Chemical Analysis
- Rainier Well 2010, 2007, 2000
- 3rd Avenue Well 2010, 2007, 2000
- WIPPCO Well 2010, 2007, 2000

Nitrate & Nitrite Chemical Analysis
- Rainier Well 2013 - 1999
- 3rd Avenue Well 2013 - 2002
- WIPPCO Well 2013 - 2002

Volatile Organic Chemical Analysis
- Rainier Well 2011, 2006, 2003, 2002, 2001, 2000
- 3rd Avenue Well 2010, 2006, 2003, 2002, 2000
- WIPPCO Well 2010, 2006, 2003, 2002, 2001, 2000

Synthetic Organic Chemical Analysis
- Rainier Well 2009, 2001, 1998
- 3rd Avenue Well 2009, 2001, 1998

WIPPCO Well 2009, 2001, 1998

Radionuclide Analysis

Rainier Well 2012, 2010, 2007

3rd Avenue Well 2010, 2007

WIPPCO Well 2012, 2007

Lead & Copper Chemical Analysis 2008, 2011

Lead & Copper Certification Form & Consumer Notice Example

Bacteriological Analysis 2013

Computer Printout of Hydraulic Analysis Results

City of Zillah Design and Construction Standards

City of Zillah Utility Connect Order Form

City of Zillah Work Order Form

Zillah Fire Department Hydrant Flow Test 2013

Map A – Existing Water System

Map B – Hydraulic Analysis Nodes and Pipes

STATE ENVIRONMENTAL POLICY ACT (SEPA) CHECKLIST

CITY OF ZILLAH
Yakima County, Washington

CITY OF ZILLAH
WATER SYSTEM PLAN

STATE ENVIRONMENTAL POLICY ACT

ENVIRONMENTAL CHECKLIST

Prepared by

HLA
Huibregtse, Louman Associates, Inc.
Civil Engineering • Land Surveying • Planning
2803 River Road
Yakima, WA 98902
509.966.7000
FAX 509.965.3800
www.hlacivil.com

HLA Project No. 13033E
JULY 2014

STATE ENVIRONMENTAL POLICY ACT

ENVIRONMENTAL CHECKLIST

A. BACKGROUND

1. *Name of Proposal, if Applicable:* Water System Plan

2. *Name of Proponent:* City of Zillah
   Phone Number: (509) 829-5151
   Address of Proponent: 503 First Ave.
   Zillah, WA 98953

3. *Person Completing Form:* Dustin Posten, PE
   Phone Number: (509) 966-7000
   Address: Huibregtse, Louman Associates, Inc.
   2803 River Road
   Yakima, WA 98902

4. *Date Checklist Prepared:* July 2014

5. *Agency Requesting Checklist:* City of Zillah

6. *Proposed timing or schedule (including phasing, if applicable):*
   Water System Plan adoption estimated by January 2015.

7. *Do you have any plans for future additions, expansions, or further activity related to or connected with this proposal? If yes, explain.*
   The plan identifies the on-going maintenance activities as well as replacement and growth-related improvements of the City's municipal water system.

8. *List any environmental information you know about that has been prepared, or will be prepared, directly related to this proposal.*
   None.

9. *Do you know whether applications are pending for governmental approvals of other proposals directly affecting the property covered by your proposal? If yes, explain.*
   No.

10. *List any governmental approvals or permits that will be needed for your proposal, if known.*
    - Zillah City Council - approval and adoption of the Plan.

- Department of Health – approval of all water system related projects.
- Department of Ecology – issuance of certified water rights for any new source.

11. *Give brief, complete description of your proposal, including the proposed uses and the size of the project and site. There are several questions later in this checklist that ask you to describe certain aspects of your proposal. You do not need to repeat those answers on this page.*

Adoption of the Water System Plan for the City of Zillah. The various chapters of the draft Water System Comprehensive Plan document can be reviewed at http://www.cityofzillah.us/Projects%20under%20Review.html. The plan identifies the following recommended maintenance and growth-related improvements to the Zillah water system:

Operational and Maintenance (O&M) Improvements:

1. 3rd Avenue Well Water Quality Analysis
2. Source Well Protective Covenants
3. WIPPCO Well Maintenance
4. Meter Replacement Project
5. DOH Sanitary Survey
6. Reservoir Inspection (Divers)
7. Re-Paint Existing Reservoirs No. 1 and No. 2
8. Valve and Fire Hydrant Replacement
9. Water System Plan Update

Major Capital Improvements:

1. Cutler Way, 10-Inch Water Main Loop
2. 3rd Avenue Well Rehabilitation
3. Rainier Well Reconstruction
4. WIPPCO Well Reconstruction
5. Zone 2 Booster Station Pump Nol. 4
6. Cutler Way Booster Station Pump No. 3
7. Zone 2, 8-Inch Water Main Loops
8. Schoentrup Drive to Reo Drive, 8-Inch Water Main Loop
9. South First Avenue to Miles Drive, 8-Inch Water Main Loop
10. Meade Street to S. First Avenue Water Main Loop
11. Pollock Avenue Upsize 4-Inch Water Main
12. Construct New Source Well at Joseph Well Site
13. Replace 6-Inch Steel Line in First Avenue from Cheyne Road to Third Street
14. Replace Existing 4-Inch Water Main in Edson Street and Loop to Fourth Avenue
15. Collin's Place Water Main Upsize
16. Zone 2 Catholic Church Water Main Upsize
17. Replace 6-Inch Steel Line in First Avenue from Meade Street to Glen Drive
18. Pearson Street to South Industrial Area Loop, 8-Inch Water Main Loop
19. Fifth Street from Glenwood Drive to Third Avenue Water Main Upsize
20. System Hypochlorination

The Environmental Checklist has been completed as it pertains to adoption of the City of Zillah Water System Plan. Construction, with potential construction related impacts, may be necessary to implement the Plan recommendations. Further environmental review is required for all non-exempt construction activities, and project specific checklist responses will be provided at that time.

12. *Location of the proposal. Give sufficient information for a person to understand the precise location of your proposed project, including a street address, if any, and section, township, and range, if known. If a proposal would occur over a range of area, provide the range or boundaries of the site(s). Provide a legal description, site plan, vicinity map, and topographic map, if reasonably available. While you should submit any plans re-*

quired by the agency, you are not required to duplicate maps or detailed plans submitted with any permit application related to this checklist.

The proposed water system improvements are located throughout the incorporated and unincorporated areas within the City of Zillah Urban Growth Area boundary, and are shown on Map B of the Water System Plan.

B. ENVIRONMENTAL ELEMENTS

1. EARTH

a. General description of the site (underline one): Flat, rolling, hilly, steep slopes, mountainous, other.

The area can be generally described as slightly rolling from the north-northeast to the south-southwest.

b. What is the steepest slope on the site (approximate percent slope)?

The majority of the City sits on slopes from 0% to 10%, but slopes along the Zillah Bluffs can be nearly vertical.

c. What general types of soils are found on the site (for example, clay, sand, gravel, peat, muck)? If you know the classification of agricultural soils, specify them and note any agricultural land of long-term commercial significance and whether the proposal results in removing any of these soils.

Eleven soil types are found within the general boundary of the Urban Growth Area, and these soil types are discussed below:

1. Cleman very fine sandy loam. This very deep, well drained soil is typically found on flood plains. Permeability of this soil is moderate. The effective rooting depth is 60 inches or more. Runoff from this soil is slow, and the water erosion hazard is moderate. This soil is typically used for irrigated field and orchard crops, non-irrigated crops, rangeland, wildlife habitat, and homesites. The main irrigated crops are grain, grapes, hops, peas, and fruit trees.

2. Esquatzel silt loam. This very deep, well drained soil is typically found on flood plains. Permeability of this soil is moderate. The effective rooting depth is 60 inches or more. Runoff from this soil is very slow. This soil is typically used for irrigated field and orchard crops, for wildlife habitat, and for homesites. The main irrigated crops are asparagus, corn, grain, grapes, hops, mint, peas, and fruit trees.

3. Logy silt loam. This very deep, well and somewhat excessively drained soils formed in alluvium on flood plans and alluvial fans. Runoff from this soil is slow. This soil is typically used for irrigated field and orchard crops, for wildlife habitat, and for homesites. The main irrigated crops are asparagus, corn, grain, grapes, hops, mint, peas, and fruit trees.

4. Outlook silt loam. This very deep, artificially drained soil is typically found on flood plains. Permeability of this soil is moderate. The effective root-

ing depth is limited by a seasonal high water table that is at a depth of 24 to 48 inches. Runoff from this soil is ponded, and the water erosion hazard is slight. This soil is typically used for irrigated crops for wildlife habitat, and for homesites. Where the soil is drained, leached, and irrigated, the main irrigated crops are asparagus, corn, grain, hops, and mint.

5. Sinloc silt loam. This deep, somewhat poorly drained soil is typically found on terraces. Permeability of this soil is moderate. Runoff from this soil is slow to medium, and the water erosion hazard is moderate to high. This soil is typically used for irrigated field and orchard crops for wildlife habitat, and for homesites. The main irrigated crops are corn, grain, grapes, hops, mint, peas, and tree fruit.

6. Warden silt loam. This very deep, well drained soil is typically found on terraces. Permeability of this soil is moderate. The effective rooting depth is 60 inches or more. Runoff from this soil is slow, and the water erosion hazard is slight. This soil is typically used for irrigated field and orchard crops for wildlife habitat, and for homesites. The main irrigated crops are corn, grain, grapes, hops, mint, peas, and tree fruit.

7. Weirman sandy loam, channeled. This very deep, somewhat excessively drained soil is typically found on low terraces and flood plains. Permeability of this soil is rapid. The effective rooting depth is limited by a seasonal high water table that is at a depth of 36 to 60 inches. Runoff from this soil is slow, and the water erosion hazard is slight. This soil is typically used as rangeland and for wildlife habitat.

8. Weirman fine sandy loam. This very deep, somewhat excessively drained soil is typically found on low terraces and flood plains. Permeability of this soil is rapid. The effective rooting depth is 60 inches or more. Runoff from this soil is slow, and the water erosion hazard is slight. This soil is typically used for irrigated crops for wildlife habitat, and for homesites. The main irrigated crops are corn, grain, grapes, and peas.

9. Yakima silt loam. This very deep, well drained soil is typically found on bottomlands. Permeability of this soil is moderate to very rapid. Runoff is very slow to slow. This soil is typically used for irrigated field and crops for wildlife habitat. The main irrigated crops are alfalfa, grass, and vegetables.

10. Zillah silt loam. This very deep, poorly drained soil is typically found on flood plains. Permeability of this soil is moderate. Runoff is very slow to ponded. This soil is typically used for irrigated field and crops for wildlife habitat. The main irrigated crops are pasture and hay.

11. Pits consists primarily of gravel pits, areas used for sanitary landfills, areas used as a source of clay, used as a source of material for roadfill and for surfacing roads, and as a source of sand and gravel for use in concrete.

Esquatzel silt loam, Cleman very fine sandy loam, Logy silt loam and Warden silt loam are classified by the U.S. Department of Agriculture Natural Resource Conservation Service (USDA-NRCS) as Prime Farmland if irrigated.

d. Are there surface indications or history of unstable soils in the immediate vicinity? If so, describe.

There has been no recent indications of unstable soils or earth movement in the Zillah area. The City of Zillah does recognize (Ordinance 760) the Zillah Bluff area along the south section of the City as an "unstable soil area" due to its slope and soil makeup.

e. Describe the purpose, type, total area, and approximate quantities and total affected area of any filling, excavation, and grading proposed. Indicate source of fill.

None proposed.

f. Could erosion occur as a result of clearing, construction, or use? If so, generally describe.

No.

g. About what percent of the site will be covered with impervious surfaces after project construction (for example, asphalt or building)?

No additional impervious surfaces.

h. Proposed measures to reduce or control erosion, or other impacts to the earth, if any:

None.

2. AIR

a. What types of emissions to the air would result from the proposal (i.e., dust, automobile, odors, industrial wood smoke) during construction, operation, and maintenance when the project is completed? If any, generally describe and give approximate quantities if known.

None.

b. Are there any off-site sources of emissions or odor that may affect your proposal? If so, generally describe.

No.

c. Proposed measures to reduce or control emissions or other impacts to air, if any:

None.

3. WATER

a. Surface Water:

1. Is there any surface water body on or in the immediate vicinity of the site (including year-round and seasonal streams, saltwater, lakes, ponds, wetlands)? If yes, de-

scribe type and provide names. If appropriate, state what stream or river it flows into.

The Yakima River, and irrigation canals and drains lie within or immediately adjacent to the current and future water service areas.

2. *Will the project require any work over, in, or adjacent to (within 200 feet) the described waters? If yes, please describe and attach available plans.*

   No.

3. *Estimate the amount of fill and dredge material that would be placed in or removed from surface water or wetlands and indicate the area of the site that would be affected. Indicate the source of fill material.*

   None.

4. *Will the proposal require surface water withdrawals or diversions? Give general description, purpose, and approximate quantities if known.*

   No.

5. *Does the proposal lie within a 100-year floodplain? If so, note location on the site plan.*

   The City of Zillah Urban Growth Area boundary contains lands located within the 100-year floodplain of the Yakima River.

6. *Does the proposal involve any discharges of waste materials to surface waters? If so, describe the type of waste and anticipated volume of discharge.*

   No.

b. *Ground Water:*

1. *Will groundwater be withdrawn from a well for drinking water or other purposes? If so, give a general description of the well, proposed uses and approximate quantities withdrawn from the well. Will water be discharged to groundwater? Give general description, purpose, and approximate quantities if known.*

   Approximately 564.6 acre-feet of ground water is presently being withdrawn for water supply of the Zillah water system. The City has rights for 1,458.1 acre-feet per year. It is forecast that Zillah's groundwater withdrawals will increase to 747.1 acre-feet annually in the year 2033.

2. *Describe waste material that will be discharged into the ground from septic tanks or other sources, if any (for example: domestic sewage, industrial, containing the following chemicals...; agricultural, etc.). Describe the general size of the system, the number of such systems, the number of houses to be served (if applicable), or the number of animals or humans the system(s) are expected to serve.*

   None.

c. *Water Runoff (including storm water):*

1. *Describe the source of runoff (including storm water) and method of collection and disposal, if any (include quantities, if known). Where will the water flow? Will this water flow into other waters? If so, describe.*
   Not applicable.

2. *Could waste materials enter ground or surface waters? If so, generally describe.*
   No.

3. *Does the proposal alter or otherwise affect drainage patterns in the vicinity of the site? If so, describe.*
   No.

4. *Proposed measures to reduce or control surface, ground, and runoff water, and drainage pattern impacts, if any:*
   Not applicable.

4. PLANTS

a. *Check or underline type of vegetation found on the site:*

__X__ deciduous tree: alder, maple, aspen, other
__X__ evergreen tree: fir, cedar, pine, other
__X__ shrubs
__X__ grass
__X__ pasture
__X__ crop or grain
__X__ Orchards, vineyards or other permanent crops
__X__ wet soil plants; cattail, buttercup, bullrush, skunk cabbage, other
____ water plants: water lily, eelgrass, milfoil, other
__X__ other types of vegetation

b. *What kind and amount of vegetation will be removed or altered?*
   None.

c. *List threatened or endangered species known to be on or near the site.*
   The U.S. Fish & Wildlife Service lists two endangered plants that may occur within Yakima County, these being:
   Ute ladies'-tresses (*Spiranthes diluvialis*); and
   Basalt Daisy (*Erigeron basalticus*).
   Neither of these two plants are known to exist within the City of Zillah or it's Urban Growth Area.

d. *Proposed landscaping, use of native plants, or other measures to preserve or enhance vegetation on the site, if any:*
   None.

e. List all noxious weeds and invasive species known to be on or near the site.

None.

5. ANIMALS

a. List any birds and other animals which have been observed on or near the site or are known to be on or near the site. Examples include:

Bird: hawk, heron, eagle, songbird, other
Mammals: deer, bear, elk, beaver, other
Fish: bass, salmon, trout, herring, shellfish, other

b. List any threatened or endangered species known to be on or near the site.

Bald eagles (*Haliaeetus leucocephalus*) listed by the U.S. Fish & Wildlife Service as "Species of Concern," are present along the Yakima River in the Zillah vicinity. Steelhead (*Oncorhynchus mykiss*), currently listed by National Marine Fisheries Service as "Threatened," and the Bull Trout (Salvelinus confluentus), currently listed by the U.S. Fish & Wildlife Service as "Threatened," are present in the Yakima River. Sandhill Cranes (*Grus Canadensis)* are listed by the State of Washington as "Endangered"

c. Is this site part of a migration route? If so, explain.

The City of Zillah Urban Growth Area boundary may be within a migratory route for some bird species. The Yakima River is a migratory route for Mid-Columbia River Steelhead (*Oncorhynchus mykiss*).

d. Proposed measures to preserve or enhance wildlife, if any:

None.

e. List any invasive animal species known to be on or near the site.

None.

6. ENERGY AND NATURAL RESOURCES

a. What kinds of energy (electric, natural gas, oil, wood stove, solar) will be used to meet the completed project's energy needs? Describe whether it will be used for heating, manufacturing, etc.

None.

b. Would your project affect the potential use of solar energy by adjacent properties? If so, generally describe.

No.

c. *What kinds of energy conservation features are included in the plans of this proposal? List other proposed measures to reduce or control energy impacts, if any:*

None.

7. ENVIRONMENTAL HEALTH

a. *Are there any environmental health hazards, including exposure to toxic chemicals, risk of fire and explosion, spill, or hazardous waste, that could occur as a result of this proposal? If so, describe.*

No.

1. *Describe any known or possible contamination at the site from present or past uses.*

None.

2. *Describe existing hazardous chemicals/conditions that might affect project development and design. This includes underground hazardous liquid and gas transmissions pipelines located within the project area and in the vicinity.*

None.

3. *Describe any toxic or hazardous chemicals that might be stored, used, or produced during the project's development or construction, or at any time during the operating life of the project.*

None.

4. *Describe special emergency services that might be required.*

None.

5. *Proposed measures to reduce or control environmental health hazards, if any:*

None.

b. *Noise*

1. *What types of noise exist in the area which may affect your project (for example: traffic, equipment, operation, other)?*

None.

2. *What types and levels of noise would be created by or associated with the project on a short-term or a long-term basis (for example: traffic, construction, operation, other)? Indicate what hours noise would come from the site.*

None.

3. *Proposed measures to reduce or control noise impacts, if any:*

None.

8. LAND AND SHORELINE USE

a. *What is the current use of the site and adjacent properties? Will the proposal affect current land uses on nearby or adjacent properties? If so, describe.*

The City of Zillah Urban Growth Area is a combination of agricultural, residential, commercial, industrial, public, and quasi-public land uses.

b. *Has the project site been used as working farmlands or working forest land? If so, describe. How much agricultural or forest land of long-term commercial significance will be converted to other uses as a result of the proposal, if any? If resource lands have not been designated, how many acres in farmland or forest land tax status will be converted to nonfarm or non-forest use?*

Historically, land within the City of Zillah Urban Growth Area has been used for agriculture. However some of the land area has been converted to non-agricultural urban uses.

1. *Will the proposal affect or be affected by surrounding working farm or forest land normal business operations, such as oversize equipment access, the application of pesticides, tilling, and harvesting? If so, how:*

No.

c. *Describe any structures on the site.*

Not applicable.

d. *Will any structures be demolished? If so, what?*

No.

e. *What is the current zoning classification of the site?*

The incorporated and unincorporated City of Zillah Urban Growth Area consists of a range of zoning classifications including residential, commercial, light manufacturing, commercial tourism, public lands/church, and suburban.

f. *What is the current comprehensive plan designation of the site?*

Not applicable.

g. *If applicable, what is the current shoreline master program designation of the site?*

Not applicable.

h. *Has any part of the site been classified as a critical area by the city or county? If so, specify.*

Yes. There are areas classified as “unstable slopes” along the southern section of the City (the Zillah Bluffs area), and there are also wetland areas present within the City and its urban growth area.

i. Approximately how many people would reside or work in the completed project?
Not applicable.

j. Approximately how many people would the completed project displace?
None.

k. Proposed measures to avoid or reduce displacement impacts, if any:
Not applicable.

l. Proposed measures to ensure the proposal is compatible with existing and projected land uses and plans, if any:
None.

m. Proposed measures to ensure the proposal is compatible with nearby agricultural and forest lands of long-term commercial significance, if any:
Not applicable.

9. HOUSING

a. Approximately how many units would be provided, if any? Indicate whether high, middle, or low-income housing.
None.

b. Approximately how many units, if any, would be eliminated? Indicate whether high, middle, or low-income housing.
None.

c. Proposed measures to reduce or control housing impacts, if any:
Not applicable.

10. AESTHETICS

a. What is the tallest height of any proposed structure(s), not including antennas; what is the principal exterior building material(s) proposed?
Not applicable.

b. What views in the immediate vicinity would be altered or obstructed?
None.

c. Proposed measures to reduce or control aesthetic impacts, if any:
None.

11. LIGHT AND GLARE

a. What type of light or glare will the proposal produce? What time of day would it mainly occur?

None.

b. Could light or glare from the finished project be a safety hazard or interfere with views?

No.

c. What existing off-site sources of light or glare may affect your proposal?

None.

d. Proposed measures to reduce or control light and glare impacts, if any:

None.

12. RECREATION

a. What designated and informal recreational opportunities are in the immediate vicinity?

The City of Zillah Urban Growth Area contains numerous municipal parks and school playgrounds. Numerous informal recreational opportunities such as fishing, bird watching, walking, jogging, bicycling, etc., exist within the Urban Growth Area.

b. Would the proposed project displace any existing recreational uses? If so, describe.

No.

c. Proposed measures to reduce or control impacts on recreation, including recreation opportunities to be provided by the project or applicant, if any:

None.

13. HISTORIC AND CULTURAL PRESERVATION

a. Area there any buildings, structures, or sites, located on or near the site that are over 45 years old listed in or eligible for listing in national, state, or local preservation registers located on or near the site? If so, specifically describe.

No.

b. Are there any landmarks, features, or other evidence of Indian or historic use or occupation? This may include human burials or old cemeteries. Is there any material evidence, artifacts, or areas of cultural importance on or near the site? Please list any professional studies conducted at the site to identify such resources.

None.

c. *Describe the methods used to assess the potential impacts to cultural an historic resources on or near the project site. Examples include consultation with tribes and the department of archeology and historic preservation, archaeological surveys, historic maps, GIS data, etc.*

None.

d. *Proposed measures to avoid, minimize, or compensate for loss, changes to, and disturbance to resources. Please include plans for the above and any permits that may be required.*

None.

14. TRANSPORTATION

a. *Identify public streets and highways serving the site or affected geographic area and describe proposed access to the existing street system. Show on site plans, if any.*

The City of Zillah Urban Growth Area contains numerous City of Zillah, Yakima County, and Washington Department of Transportation streets and highways. Public streets are shown on Map B of this Water System Plans

b. *Is the site or affected geographic area currently served by public transit? If so, general describe. If not, what is the approximate distance to the nearest transit stop?*

No public transit service is provided within the City of Zillah Urban Growth Area.

c. *How many additional parking spaces would the completed project or non-project proposal have? How many would the project or proposal eliminate?*

Not applicable.

d. *Will the proposal require any new or improvements to existing roads, streets, pedestrian, bicycle or state transportation facilities, not including driveways? If so, generally describe (indicate whether public or private).*

No.

e. *Will the project or proposal use (or occur in the immediate vicinity of) water, rail, or air transportation? If so, generally describe.*

No.

f. *How many vehicular trips per day would be generated by the completed project or proposal? If known, indicate when peak volumes would occur and what percentage of the volume would be trucks (such as commercial and non-passenger vehicles). What data or transportation models were used to make these estimates?*

None.

g. Will the proposal interfere with, affect or be affected by the movement of agricultural and forest products on roads or streets in the area? If so, generally describe.

No.

h. *Proposed measures to reduce or control transportation impacts, if any:*
None.

15. PUBLIC SERVICES

a. *Would the project result in an increased need for public services (for example: fire protection, police protection, health care, schools, other?) If so, generally describe.*
No.

b. *Proposed measures to reduce or control direct impacts on public services, if any.*
None.

16. UTILITIES

a. *Underline the utilities currently available at the site: electricity, natural gas, water, refuse service, telephone, sanitary sewer, septic system, irrigation, cable TV, drains, other.*
Available at numerous locations within the City of Zillah Urban Growth Area.

b. *Describe the utilities that are proposed for the project, the utility providing the service, and the general construction activities on the site or in the immediate vicinity which might be needed.*
None

C. SIGNATURE

The above answers are true and complete to the best of my knowledge. I understand that the lead agency is relying on them to make its decision.

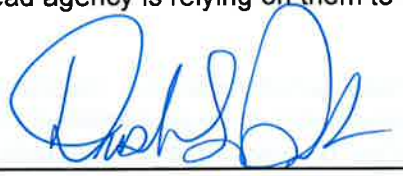

8/14/14
Date

Dustin Posten, PE
Project Consulting Engineer
Huibregtse, Louman Associates, Inc.

D. SUPPLEMENTAL SHEET FOR NONPROJECT ACTION

1. How would the proposal be likely to increase discharge to water; emissions to air; production, storage or release of toxic or hazardous substances; or production of noise?

This Water System Plan addresses and identifies improvements to and expansion of the City of Zillah's water system necessary to accommodate projected growth within the City and its Urban Growth Area over the next 20-year period. No increases in the discharge of treated wastewater, emissions to air, production, storage, or release of toxic or hazardous substances, or production of noise are likely as a result of this proposal.

Proposed measures to avoid or reduce such increases are:

Not applicable.

2. How would the proposal be likely to affect plants, animals, fish, or marine life?

No effects are likely as a result of this proposal.

Proposed measures to protect or conserve plants, animals, fish or marine life are:

Not applicable.

3. How would the proposal be likely to deplete energy of natural resources?

Because some water system components operate electrically, this proposal may result in a minor increase in energy requirements to operate electrical equipment over current amounts.

Proposed measures to protect or conserve energy and natural resources are:

The increase of electrical energy requirements will be reduced to the extent possible through the use of high-efficiency electrical motors and equipment.

4. How would the proposal be likely to use or affect environmentally sensitive areas or areas designated (or eligible or under study) for governmental protection; such as parks, wilderness, wild and scenic rivers, threatened or endangered species habitat, historic or cultural sites, wetlands, floodplains, or prime farmlands?

The proposal in not likely to use or affect environmentally sensitive areas. As stated above, future identified maintenance or improvement projects should be evaluated at the time of project initiation and design to minimize use or effect on environmentally sensitive areas.

Proposed measures to protect such resources or to avoid or reduce impacts are:

Environmentally sensitive areas were identified during the development of Zillah's GMA Comprehensive Plan. These areas will be avoided when detailed plans are prepared and pipeline alignments selected.

5. *How would the proposal be likely to affect land and shoreline use, including whether it would allow or encourage land or shoreline uses incompatible with existing plans?*

The proposal will not affect land or shoreline use in ways incompatible with existing plans.

Proposed measures to avoid or reduce shoreline and land use impacts are:

None.

6. *How would the proposal be likely to increase demands on transportation or public services and utilities?*

This proposal identifies the future demand upon the Zillah water system, and identifies the measures the City will take to accommodate that future demand.

Proposed measures to reduce or respond to such demand(s) are:

Proposed measures include expansion of the water system to serve lands within the City's Urban Growth Area.

7. *Identify, if possible whether the proposal may conflict with local, state, or federal laws or requirements for the protection of the environment.*

This proposal does not conflict with laws or requirements for the protection of the environment. Improvements identified within this proposal will allow the City to comply with public health requirements.

SEPA DETERMINATION OF NON-SIGNIFICANCE (DNS)

The City Of Zillah
THE HEART OF WINE COUNTRY

DATE: October 13, 2014

TO: Interested Agencies and Interested Parties

FROM: Ardele Steele, Planning Official / SEPA Responsible Official

SUBJ: **File No. ER 2014-19& CPA 2014-20 (CWP) - City of Zillah 2014 Comprehensive Water Plan Water Use Efficiency Program (WUE) - Goals and plan**
Notice of Decision on Environmental Review – FINAL Determination of Non-Significance

Description of Proposal
On September 2, 2014, the City of Zillah submitted an Environmental checklist and a Comprehensive Plan Amendment application for processing. City of Zillah is proposing to update its Comprehensive Water Plan which includes the Water Use Efficiency (WUE) Program in Chapter 4 of the CWP. These documents are being adopted to allow the City of Zillah to comply with state law. The Comprehensive Water System Plan outlines the current and future impacts as well as the future upgrades to the City of Zillah's water system. These applications were deemed complete for further processing on September 9, 2014.

Location: City of Zillah

Environmental Review and Determination:
The City of Zillah, as lead agency for this proposal, has determined that it will not have a probable significant adverse impact on the environment and an Environmental Impact Statement (EIS) is not required under *RCW 43.21C.030(2)(c)*. The Determination of non-significance (DNS) was issued under WAC 197-11-340(2).

Comment and Appeal Information
The comment period on the environmental impacts of this proposal was between **September 18th and October 6, 2014**. *There is no further comment period for this DNS.* Notice of the Planning Commission recommendation on the Plan and regulation changes will be sent to those who commented, or may be obtained upon request. There is no administrative appeal of the final threshold determination.

For information on the comment process, or on other issues relating to this proposal, please contact Ardele Steele, Associate Planner at 509-829-5151.

Encl.: Final DNS – Interested Parties and Agencies

FINAL
DETERMINATION OF NON-SIGNIFICANCE

1. **Description of Proposal:** City of Zillah is proposing to update its Comprehensive Water Plan. These documents are being adopted to allow the City of Zillah to comply with state law. Information on this project can be obtained in our offices.

2. **Proponent:** City of Zillah
503 First Avenue
P.O. Box 475
Zillah, WA 98953

3. **Location of Proposal:** City of Zillah, Urban Growth/Service Area

4. **Lead Agency:** City of Zillah

5. **File Number:** ER **2014-19**

6. **Determination:**
The lead agency for this proposal has determined that it will not have a probable significant adverse impact on the environment and an Environmental Impact Statement (EIS) is not required under RCW 43.21C.030(2)(c). This decision was made after a careful review of the completed environmental checklist, and other information on file with the lead agency. This information is available to the public on request and can be examined in our offices during regular business hours.

7. **Comment Period:** This DNS was issued under WAC 197-11-340(2). The comment period on the environmental impacts of this proposal was between **September 18th and October 6, 2014**. There is no further comment for this DNS. There is no administrative appeal of the final threshold determination.
For information on the comment process, or on other issues relating to this proposal, contact Ardele Steele, Associate Planner at 509-829-5151.

8. **SEPA Responsible Official:**



Ardele Steele, AICP

9. **Position/Title:** SEPA Responsible Official

10. **Address:** 503 First Avenue
P.O. Box 475
Zillah, WA 98953

11. **Date:** October 14, 2014

Encl.: Final DNS – Interested Parties and Agencies

STATE OF WASHINGTON
DEPARTMENT OF ECOLOGY
15 W Yakima Ave, Ste 200 • Yakima, WA 98902-3452 • (509) 575-2490

RECEIVED
SEP 24 2014
BY:

September 22, 2014

Tom Tilley
City of Zillah
PO Box 475
Zillah WA 98953-0475

Re: Water Right No. G4-29702P

Dear Mr. Tilley:

In response to the city's request, an extension is hereby granted to put the water to full beneficial use for the reason(s) below:

As described in the Huibregtse, Louman Associates letter of August 19, 2014, and the draft City of Zillah Water system Plan (August 2014), you have shown good cause and due diligence by:

- Taking steps to address the deficiencies in the 3rd Avenue Well (S02) and restore it to its full capacity
- Taking steps to upgrade and repair the WIPPCU Well (S03) to ensure reliable water production.

The new deadline to submit your *Proof of Appropriation of Water* is **July 31, 2021**.

YOUR RIGHT TO APPEAL

You have a right to appeal this decision to the Pollution Control Hearing Board (PCHB) within 30 days of the date of receipt of this decision. The appeal process is governed by Chapter 43.21B RCW and Chapter 371-08 WAC. "Date of receipt" is defined in RCW 43.21B.001(2).

To appeal you must do the following within 30 days of the date of receipt of this decision:

- File your appeal and a copy of this decision with the PCHB (see addresses below). Filing means actual receipt by the PCHB during regular business hours.
- Serve a copy of your appeal and this decision on Ecology in paper form - by mail or in person. (See addresses below.) E-mail is not accepted.

You must also comply with other applicable requirements in Chapter 43.21B RCW and Chapter 371-08 WAC.

ADDRESS AND LOCATION INFORMATION

Street Addresses	Mailing Addresses
Department of Ecology Attn: Appeals Processing Desk 300 Desmond Drive SE Lacey WA 98503 **Pollution Control Hearings Board** 1111 Israel Road SW Ste 301 Tumwater WA 98501	**Department of Ecology** Attn: Appeals Processing Desk PO Box 47608 Olympia WA 98504-7608 **Pollution Control Hearings Board** PO Box 40903 Olympia WA 98504-0903

For additional information visit the Environmental Hearings Office Website: http://www.eho.wa.gov
To find laws and agency rules visit the Washington State Legislature Website: http://www.leg.wa.gov/CodeReviser

If you have any questions, please contact Teresa Mitchell at 509-575-2597.

Sincerely,

Robert F. Barwin
Acting Section Manager
Water Resources Program

RFB:DH:HD
140911

Enclosures: *Proof of Appropriation of Water*
Your Right to Be Heard

By certified mail: 7010 0290 0000 7131 2443

STATE OF WASHINGTON
DEPARTMENT OF ECOLOGY
15 W Yakima Ave, Ste 200 • Yakima, WA 98902-3452 • (509) 575-2490

RECEIVED
SEP 24 2014
BY:

September 23, 2014

Tim Tilley
City of Zillah
PO Box 475
Zillah WA 98953-0475

Bryan Sayers
Department of Health
16201 East Indiana Avenue, Suite 1500
Spokane Valley WA 99216-2836

Subject: City of Zillah Water System Plan Draft Review

Thank you for the opportunity to review the draft Water System Plan (WSP) for the City of Zillah. Based on my review:

- The WSP is "not inconsistent" with an approved watershed plan adopted under 90.82 RCW or 90.54 RCW.

- Ecology has granted an extension to your water right number G4-29702P. With this extension, the City of Zillah is compliant with its existing water rights.

Please contact me if you have any questions at (509) 457-7112.

Sincerely,

David Holland, Environmental Planner
Department of Ecology, Central Regional Office

DH:HD
140910

2013
WATER FACILITY INVENTORY

WATER FACILITIES INVENTORY (WFI) FORM

ONE FORM PER SYSTEM

Quarter: 1
Updated: 10/31/2013
Printed: 6/30/2014
WFI Printed For: On-Demand
Submission Reason: Pop/Connect

RETURN TO: Eastern Regional Office, 16201 E Indiana, Suite 1500, Spokane Valley, WA, 99216

1. SYSTEM ID NO.	2. SYSTEM NAME	3. COUNTY	4. GROUP	5. TYPE
99800 W	ZILLAH, CITY OF	YAKIMA	A	Comm

6. PRIMARY CONTACT NAME & MAILING ADDRESS
TIM TILLEY [PW DIRECTOR]
PO BOX 475
ZILLAH, WA 98953

STREET ADDRESS IF DIFFERENT FROM ABOVE
ATTN
ADDRESS 503 FIRST AVE
CITY ZILLAH STATE WA ZIP 98953

7. OWNER NAME & MAILING ADDRESS
ZILLAH, CITY OF
TIM TILLEY
PO BOX 475
ZILLAH, WA 98953

8. Owner Number 006820
TITLE: PW DIRECTOR

STREET ADDRESS IF DIFFERENT FROM
ATTN
ADDRESS
CITY STATE ZIP

9. 24 HOUR PRIMARY CONTACT INFORMATION		10. OWNER CONTACT INFORMATION	
Primary Contact Daytime Phone:	(509) 829-5151	Owner Daytime Phone:	(509) 829-5151
Primary Contact Mobile/Cell Phone:	(509) 949-0380	Owner Mobile/Cell Phone:	(509) 949-0380
Primary Contact Evening Phone:	(xxx) xxx-xxxx	Owner Evening Phone:	(xxx) xxx-xxxx
Fax:(509) 829-5457 | E-mail: XXXXXX		Owner Fax Phone: | E-mail: XXXXXX	

WAC 246-290-420(9) requires that water systems provide 24-hour contact information for emergencies.

11. SATELLITE MANAGEMENT AGENCY - SMA (check only one)

- [x] Not applicable (Skip to #12)
- [ ] Owned and Managed — SMA NAME: _____ SMA Number:
- [ ] Managed Only
- [ ] Owned Only

12. WATER SYSTEM CHARACTERISTICS (mark all that apply)

- [ ] Agricultural
- [x] Commercial / Business
- [x] Day Care
- [x] Food Service/Food Permit
- [ ] 1,000 or more person event for 2 or more days per year
- [ ] Hospital/Clinic
- [x] Industrial
- [ ] Licensed Residential Facility
- [x] Lodging
- [ ] Recreational / RV Park
- [x] Residential
- [x] School
- [ ] Temporary Farm Worker
- [ ] Other (church, fire station, etc.): _____

13. WATER SYSTEM OWNERSHIP (mark only one)

- [ ] Association
- [x] City / Town
- [ ] County
- [ ] Federal
- [ ] Investor
- [ ] Private
- [ ] Special District
- [ ] State

14. STORAGE CAPACITY (gallons)
~~1,225,000~~ 1,046,000

15	16	17	18										19			20	21						22	23	24			
	SOURCE NAME	INTERTIE	SOURCE CATEGORY										USE				TREATMENT						DEPTH		SOURCE LOCATION			
Source Number	LIST UTILITY'S NAME FOR SOURCE AND WELL TAG ID NUMBER. Example: WELL #1 XYZ456 IF SOURCE IS PURCHASED OR INTERTIED, LIST SELLER'S NAME Example: SEATTLE	INTERTIE SYSTEM ID NUMBER	WELL	WELL FIELD	WELL IN A WELL	SPRING	SPRING FIELD	SPRING IN GRAVEL	SEA WATER	SURFACE WATER	RANNEY / INF.	OTHER	PERMANENT	SEASONAL	EMERGENCY	SOURCE METERED	NONE	CHLORINATION	FILTRATION	FLUORIDATION	IRRADIATION (UV)	OTHER	DEPTH TO FIRST OPEN INTERVAL IN FEET	CAPACITY (GALLONS PER MINUTE)	1/4, 1/4 SECTION	SECTION NUMBER	TOWNSHIP	RANGE
S01	Rainier Ave		X										X			X	X						280	550	NW NE	36	11N	20E
S02	Third Ave		X										X			X	X						950	400	SE SW	25	11N	20E
S03	WIPPCO Well		X										X			X	X						260	650	SW SW	25	11N	20E

WATER FACILITIES INVENTORY (WFI) FORM - Continued

1. SYSTEM ID	2. SYSTEM NAME	3. COUNTY	4. GROUP	5. TYPE
99800 W	ZILLAH, CITY OF	YAKIMA	A	Comm

	ACTIVE SERVICE CONNECTIONS	DOH USE ONLY! CALCULATED ACTIVE CONNECTIONS	DOH USE ONLY! APPROVED CONNECTIONS
25. SINGLE FAMILY RESIDENCES (How many of the following do you have?)	0	1051	Unspecified
A. Full Time Single Family Residences (Occupied 180 days or more per year)	859		
B. Part Time Single Family Residences (Occupied less than 180 days per year)	0		
26. MULTI-FAMILY RESIDENTIAL BUILDINGS (How many of the following do you have?)			
A. Apartment Buildings, condos, duplexes, barracks, dorms	95		
B. Full Time Residential Units in the Apartments, Condos, Duplexes, Dorms that are occupied more than 180 days/year	192		
C. Part Time Residential Units in the Apartments, Condos, Duplexes, Dorms that are occupied less than 180 days/year	0		
27. NON-RESIDENTIAL CONNECTIONS (How many of the following do you have?)			
A. Recreational Services and/or Transient Accommodations (Campsites, RV sites, hotel/motel/overnight units)	0	0	
B. Institutional, Commercial/Business, School, Day Care, Industrial Services, etc.	115	115	
28. TOTAL SERVICE CONNECTIONS		1166	

29. FULL-TIME RESIDENTIAL POPULATION

A. How many residents are served by this system 180 or more days per: 3130

30. PART-TIME RESIDENTIAL POPULATION	JAN	FEB	MAR	APR	MAY	JUN	JUL	AUG	SEP	OCT	NOV	DEC
A. How many part-time residents are present each month?												
B. How many days per month are they present?												

31. TEMPORARY & TRANSIENT USERS	JAN	FEB	MAR	APR	MAY	JUN	JUL	AUG	SEP	OCT	NOV	DEC
A. How many total visitors, attendees, travelers, campers, patients or customers have access to the water system each month?												
B. How many days per month is water accessible to the public?												

32. REGULAR NON-RESIDENTIAL USERS	JAN	FEB	MAR	APR	MAY	JUN	JUL	AUG	SEP	OCT	NOV	DEC
A. If you have schools, daycares, or businesses connected to your water system, how many students daycare children and/or employees are present each month?												
B. How many days per month are they present?												

33. ROUTINE COLIFORM SCHEDULE	JAN	FEB	MAR	APR	MAY	JUN	JUL	AUG	SEP	OCT	NOV	DEC
	3	3	3	3	3	3	3	3	3	3	3	3

35. Reason for Submitting WFI:

☒ Update - Change ☐ Update - No Change ☐ Inactivate ☐ Re-Activate ☐ Name Change ☐ New System ☐ Other _____

36. I certify that the information stated on this WFI form is correct to the best of my knowledge.

SIGNATURE: _____

DATE: _____

PRINT NAME: _____

TITLE: _____

LOCAL GOVERNMENT CONSISTENCY REVIEW CHECKLIST(S)

Health

Local Government Consistency Review Checklist

Water System Name: City of Zillah PWS ID: 99800 W

Planning/Engineering Document Title: Water System Plan Plan Date: 2014

Local Government with Jurisdiction: City of Zillah

WAC 246-290-108 Consistency with local plans and regulations:
Consistency with local plans and regulations applies to planning and engineering documents under WAC 246-290-106, 246-290-107, and 246-290-110(4)(b (ii).

1) Municipal water suppliers must include a consistency review and supporting documentation in its planning or engineering document describing how it has addressed consistency with **local plans and regulations**. This review must include specific elements of local plans and regulations, as they reasonably relate to water service as determined by Department of Health (DOH). Complete the table below and see instructions on back.

Local Government Consistency Statement	Page(s) in Planning Document	Yes – No – Not Applicable
a) The water system service area is consistent with the adopted land use and zoning within the applicable service area.	2-1 through 2-4	Yes
b) The six-year growth projection used to forecast water demand is consistent with the adopted city/county's population growth projections. If a different growth projection is used, provide an explanation of the alternative growth projection and methodology.	2-5 through 2-8	Yes
c) Applies to cities and towns that provide water service: All water service area policies of the city or town are consistent with the utility service extension ordinances of the city or town.	1-9 through 1-11	Yes
d) Service area policies for new service connections are consistent with the adopted local plans and adopted development regulations of all jurisdictions with authority over the service area [City(ies), County(ies)].	1-9 through 1-11	Yes
e) Other relevant elements related to water supply are addressed in the water system plan, if applicable; Coordinated Water System plans, Regional Wastewater plans, Reclaimed Water plans, Groundwater Area Management plans, and Capital Facilities Element of Comprehensive plans.	NA	Yes

I certify that the above statements are true to the best of my knowledge and that these specific elements are consistent with adopted local plans and development regulations.

Ardele M. Steele 12-16-2014

Signature Date

Ardele M. Steele, Associate Planner City of Zillah

Printed Name, Title, & Jurisdiction

Health

Local Government Consistency Review Checklist

Water System Name: City of Zillah PWS ID: 99800 W

Planning/Engineering Document Title: Water System Plan Plan Date: 2014

Local Government with Jurisdiction: Yakima County

WAC 246-290-108 Consistency with local plans and regulations:
Consistency with local plans and regulations applies to planning and engineering documents under WAC 246-290-106, 246-290-107, and 246-290-110(4)(b (ii).

1) Municipal water suppliers must include a consistency review and supporting documentation in its planning or engineering document describing how it has addressed consistency with **local plans and regulations**. This review must include specific elements of local plans and regulations, as they reasonably relate to water service as determined by Department of Health (DOH). Complete the table below and see instructions on back.

Local Government Consistency Statement	Page(s) in Planning Document	Yes – No – Not Applicable
a) The water system service area is consistent with the adopted land use and zoning within the applicable service area.	2-1 through 2-4	Yes
b) The six-year growth projection used to forecast water demand is consistent with the adopted city/county's population growth projections. If a different growth projection is used, provide an explanation of the alternative growth projection and methodology.	2-5 through 2-8	No *
c) Applies to cities and towns that provide water service: All water service area policies of the city or town are consistent with the utility service extension ordinances of the city or town.	1-9 through 1-11	N.A.
d) Service area policies for new service connections are consistent with the adopted local plans and adopted development regulations of all jurisdictions with authority over the service area [City(ies), County(ies)].	1-9 through 1-11	Yes
e) Other relevant elements related to water supply are addressed in the water system plan, if applicable; Coordinated Water System plans, Regional Wastewater plans, Reclaimed Water plans, Groundwater Area Management plans, and Capital Facilities Element of Comprehensive plans.	NA	N.A

I certify that the above statements are true to the best of my knowledge and that these specific elements are consistent with adopted local plans and development regulations.

Phil Hoge 12-18-14

Signature Date

Phil Hoge, Project Planner-Long Range, Yakima County

Printed Name, Title, & Jurisdiction * See explanation in attached letter/email.

Dustin Posten

From: Phil Hoge <phil.hoge@co.yakima.wa.us>
Sent: Thursday, April 09, 2015 1:48 PM
To: Dustin Posten
Cc: Thomas Carroll
Subject: RE: Zillah Water System Plan - County's Consistency Checklist
Attachments: population errors in Zillah's WSP footnoted.docx

Hi, Dustin--

Tommy and I have reviewed your email, Zillah's draft WSP, and the County's population projections. The WSP's "Section 2.3.2 Future Population," we believe, includes several misstatements and misunderstandings, which we address in the attached document's footnotes.

Our conclusions, as explained in the footnotes, are:

1. The County's projections (made in 2007) are not erroneous; (indeed, in 2009 the Growth Management Hearings Board found Zillah's higher population projections inconsistent with the Growth Management Act and let the County's projections stand).
2. The WSP's population projections are higher than the County's projections, and are therefore inconsistent with the County's projections.
3. It would be incorrect for the County to find that the WSP's population projections are consistent with the County's projections.

That said, the County observes that the Consistency Checklist only recognizes the responsibility and obligation of the County to determine consistency between the items listed on the Checklist, including population projections. However, it is not the prerogative of the County to determine the consistency between the population projections used in the WSP and the WSP's plan, program, budget, etc. Your contention that the difference between the County's and WSP's population projections would result in no difference or impacts in the WSP's plan, program, budget, etc. is entirely plausible. But it is Zillah's prerogative and responsibility, not the County's, to demonstrate and justify that conclusion.

Furthermore, DOH's statement that RCW 43.20.260 forbids DOH from approving a WSP without local government consistency appears contrary to a reading of that RCW and DOH's past practice. The RCW says, in pertinent part: "…[DOH] shall ensure that water service to be provided…is consistent with…requirements of any comprehensive plan or development regulations…" The County sees no inconsistency between its comp plan or development regulations and Zillah's water service. In our experience, when the County has found an inconsistency between its population projections and those in a city's WSP, DOH would at least consider and evaluate the city's justification for the difference, despite the County's finding.

If you have further questions, please feel free to contact me.

Phil Hoge
Project Planner - Long Range
Planning Division | Yakima County Public Services
Fourth Floor County Courthouse | 128 N. 2nd Street | Yakima, WA 98901
509-574-2300 voice | 509-574-2301 fax
phil.hoge@co.yakima.wa.us
www.yakimacounty.us/planning

2.3.2 Future Population

The Yakima County Planning Division has provided the County-Wide Planning Policy Committee population projections for each community within Yakima County for the year 2025[1]. A population estimate for the year 2025 of 4,019 has been made for Zillah, based on the County's 2.5% per year estimate[2]. However, the City believes that the population increase will be even larger with the continued build-out of the Zillah Lakes planned development[3].

The County projected the City population to be 2,858 in 2010, but the City's population was actually 2,964, according to the 2010 Census results provided by the US Census Bureau. For 2011, the County projected a population of 2,929, which is below the 2010 Census value and the OFM projection of 3,000[4]. In response to these shortfalls, Yakima County adjusted the growth rate for Zillah to 2.7% in the Growth Management Hearings Board in 2009[5]. This adjustment will help the projections remain consistent with the growth of previous years. For the purpose of water system planning, the City's projected future population is as shown in Table 2-6[6].

[1] Yakima County distributed the County-Wide Planning Policy Committee's population projections for each community for the year 2025 on May 20, 2002. The CWPPC's year 2025 high projection for Zillah was 3,222.

[2] In 2006, while conducting the land capacity analysis for the Growth Management Act's required 10-year Urban Growth Area review, Yakima County realized the Committee's projection for Zillah was erroneously low and revised it up to 4,019. This revision was based on a straight line extrapolation of Zillah's population increase from 2000 to 2006 (i.e., adding 72.8333 people per year), rather than "on the County's 2.5% per year estimate."

[3] Yakima County knows of no evidence that the development of Zillah Lakes will disproportionately increase Zillah's population. In 2006 Zillah expressed its belief that the Zillah Lakes planned development will be a market unto itself and result in a population growth that will be on top of the "background" growth for the rest of Zillah. During the 2006 discussions, Zillah expressed its belief that Zillah Lakes would build out within seven years, which clearly has not happened. The County disagreed with Zillah's beliefs in 2006 and has no evidence to change its assessment in 2015. A comparison of the County's projections with the 2010 Census and subsequent OFM estimate in footnote 4 (below) supports the County's position.

[4] The County's straight line projection, which was adopted in 2006 and revised the CWPPC's projection, did not state a population for 2010, but its methodology (i.e., adding 72.8333 per year after year 2006) would calculate a 2010 population of 2,926, which is 38 less than 2,964 (2010 Census). The County's straight line projection methodology would also calculate a 2011 population of 2,999, which is 1 less than OFM's estimate of 3,000. These data indicate that the County's straight line projection is reasonably accurate to date.

[5] Yakima County did not adjust the growth rate for Zillah to 2.7% in the Growth Management Hearings Board in 2009. The County adopted -- in 2006 -- the straight line projection, which adjusted the CWPPC's projection as described in footnote 2 (above), and used that projection during the 2007 land capacity analysis and at the Growth Management Hearings Board. Indeed, the straight line projection is the County's most recently adopted projection for Zillah.

[6] Table 2-6 is based on the erroneous 2.7% annual increase (as described in footnote 5 above). Using the erroneous 2.7% factor results in the population projections in Table 2-6, which are inconsistent with Yakima County's current population projection for Zillah.

Find us on Facebook follow us on twitter
This email and replies to it are subject to public disclosure under Washington state statute (RCW 42.56 - Public Records Act).

From: Dustin Posten [mailto:dposten@hlacivil.com]
Sent: Monday, March 30, 2015 3:38 PM
To: Thomas Carroll
Cc: Phil Hoge
Subject: RE: Zillah Water System Plan - County's Consistency Checklist

Hello Tommy,

Thank you for discussing Dept. of Health's comments on Zillah's Water System Plan Update in Phil's absence. Attached and below are Phil's comments on the Zillah WSP in December, along with DOH's comments and our responses. We would like to request an updated local government consistency checklist from Yakima County which notes the 2020 growth projection as consistent, based on the fact that we have evaluated the County's lower population projections, and found them to have no impact on the recommended improvements (as noted in our response below).

[DOH Comment 3/10/2015]
Please address the concern expressed in the Local Government Consistency Review Checklist from Yakima County. Consider how the plan changes using lower population projections, i.e. lower operational revenue but, perhaps, lower capital facilities requirements as well. Then, attempt to obtain a revised Local Government Consistency Review checklist from Yakima County.

[HLA/CITY Response 3/27/2015]
The six-year growth projection inconsistency with Yakima County is noted. Although the projections diverge, the limited population difference of 91 additional people in 2020 (or 28 additional SFR services) has no impact on the recommended improvements. Additionally, the potential 'lost' revenue using the County's lower population projections would result in an estimated 1% revenue reduction, or approximately $9,000 less in 2020 which will not have a significant impact on financing proposed future improvements. For these reasons, the Plan population projections will remain based on the City established population projections and a revised local government consistency review checklist will not be requested from the County.

[DOH Comment 3/30/2015]
As a part of attaining a "not inconsistent" statement from Yakima County, the evaluation of the impact on a lower population growth rate is an important part of the plan. Additionally, local government consistency is required by RCW 43.20.260, which forbids the Department of Health from approving a water system plan without local government consistency. Please include the evaluation of the impact of a lower population growth rate at an appropriate location within the plan and include a completed local government consistency statement from Yakima County.

Please call with questions, or to discuss further. We appreciate your assistance in addressing these comments.

Thank you.

Dustin Posten, PE
Huibregtse, Louman Associates, Inc.

Phone: (509) 966-7000 | Fax: (509) 965-3800

From: Phil Hoge [mailto:phil.hoge@co.yakima.wa.us]
Sent: Thursday, December 18, 2014 8:32 AM
To: Dustin Posten
Cc: Thomas Carroll
Subject: Zillah Water System Plan - County's Consistency Checklist

December 18, 2014

Dustin Posten, PE
HLA, Inc.
2803 River Road
Yakima, WA 98902

Dear Dustin:

Attached is Yakima County's Consistency Review Checklist for Zillah's 2014 Water System Plan.

The population projections in the WSP are somewhat higher than Yakima County's most recent population projection for Zillah, which was issued in 2007 during the County's review of its Urban Growth Areas. The County projected Zillah's population to be 4,019 in year 2025. Using a straight line interpolation from Zillah's year 2005 population of 2,595 (the official estimate by Office of Financial Management) results in a "six-year growth projection" of 3,663 people (in year 2020) and 3,734 people (in year 2021). The WSP projects that Zillah's population will be 3,754 in year 2020 and 3,855 in year 2021. Thus, the WSP's projections are higher than those made by Yakima County.

Furthermore, Yakima County is currently in the process of projecting populations through year 2040 for each city in the County as part of our next review of Urban Growth Areas, which is due to be completed in year 2017. These projections are not yet finalized; however, we have noted that Zillah's population grew at an annual rate of 1.45% from 2010 to 2014. This is lower than the annual rate of 2.7% used by the WSP for the period 2014 to 2035.

Please feel free to contact me if you have questions or need additional information.

Sincerely,

Phil Hoge
Project Planner - Long Range
Planning Division | Yakima County Public Services
Fourth Floor County Courthouse | 128 N. 2nd Street | Yakima, WA 98901
509-574-2300 voice | 509-574-2301 fax
phil.hoge@co.yakima.wa.us
www.yakimacounty.us/planning



This email and replies to it are subject to public disclosure under Washington state statute (RCW 42.56 - Public Records Act).

WATER USE EFFICIENCY (WUE) PROGRAM

Water Use Efficiency (WUE) Program

Introduction

The City of Zillah (City) recognizes that water is a valuable and essential natural resource that needs to be used wisely. This Water Use Efficiency (WUE) program provides an approach to increase water use efficiency within the City's water service area.

Objectives

The objectives of this document are to:

- Describe how the City of Zillah Water District (City) will meet the state requirements of the Water Use Efficiency Rule (WUE Rule)
- Outline the water use efficiency goals the City has established
- Describe the water use efficiency measures that the City has chosen to implement to meet its Goals
- Describe how the City's water use efficiency program will be re-evaluated annually.

Water Use Efficiency Plan

Under the WUE Rule, City of Zillah must have set water use efficiency goals by July 1, 2010 and measure progress each year toward meeting those goals. As part of the Planning Requirements of the WUE, municipal water suppliers are required to collect data, forecast demand, evaluate WUE measures, calculate distribution leakage and implement a WUE program to meet their goals. Goals must include a measurable outcome, address water supply characteristics, and include an implementation schedule. As part of this data collection, demand forecasting is also an essential component for determining future use and potential savings through a water use efficiency program. The City must also evaluate or implement efficiency measures to help meet the goals. A description of the water supplier's water source and supply characteristics must also be provided.

Distribution Leakage Standard

Prior to adoption of the Municipal Water Law, the Department of Health did not have a set distribution leakage standard, but encouraged a figure of 20% or less. Municipal water suppliers must now meet a 10% or less distribution system leakage rate to comply with the new state standard. Leakage must be presented both as a percentage and as leakage volume, and based on a rolling three-year average.

Compliance with the distribution leakage standard must have been met by July 1, 2010; if unable to meet this standard, the supplier must have developed and implemented a Water Loss Control Action Plan that outlines the steps and timelines to achieve the desired leakage rate. Additionally, a meter installation schedule is also required for all service connections currently not metered.

Goal Setting and Performance Reporting

The WUE requires municipal water suppliers to establish water use efficiency goals. Establishing goals demonstrates commitment and support from the utility and its' water customers to use water

DRAFT

efficiently. Goals must be established through a public process and reported on annually, to customers and DOH by July 1 of each year. The WUE goals established through a public process are for a six-year period, and should be re-evaluated each cycle. Goals must be measurable, address water supply and demand forecasting, and include an implementation schedule for each goal. Performance reports are required to be made available to the public: this requirement may be fulfilled by including the performance report information in the annual Consumer Confidence Report.

Annual water system production total, distribution system leakage information, and a description of the WUE goals and progress of achieving them must also be included in this publication.

WATER SUPPLY CHARACTERISTICS

The City of Zillah has three sources for water supply with a total reservoir capacity of 1.46 MG. All three City-owned source wells are located on City-owned properties at various locations within the water system. For a total breakdown of the city's water system, see the most recently adopted City of Zillah Water system Plan for further details.

WATER CONSERVATION GOALS

The City of Zillah is implementing water conservation measures as mandated under WAC 246-290-466. Water meters are in place at all sources and service connections. Meter data is collected and evaluated to determine trends in the consumption of water, and to generally account for the water in the system. The following is an outline of the measures that will be taken in an effort to achieve our water use efficiency goals.

Goals and Measures

City of Zillah's Demand - Conservation goal will be to reduce the average equivalent residential unit annual water consumption by a minimum of 1% across all user classes within six years.

WATER CONSERVATION MEASURES

Water Use Efficiency Measures

The WUE Rule requires that water efficiency measures must be implemented or evaluated. WAC 246-290-810 identifies the minimum number of water use efficiency measures that must be evaluated based on system size. City of Zillah has more than 1,000 connections and therefore must evaluate or implement five supplementary water use efficiency measures in addition to the mandatory measures. The following sections describe the mandatory measures and the supplemental measures City of Zillah will implement.

Mandatory Measures:

1. Source and Service Metering

Source Metering – City of Zillah currently meters all customers and sources. The City has production meters on all water sources as well as a state of the art telemetry system to monitor these sites. The telemetry system monitors the operation of our water production system for possible pressure loss, pump function, and water reservoir levels. Each component of the water supply system including the

city's meters, water mains, supply wells, reservoirs, booster stations, pressure reducing valves, and other facilities is inspected regularly and repairs are made when necessary. City of Zillah is already in compliance with this requirement.

Service Metering –Industry standards for residential water meters state that these meters are expected to have a reasonable level of accuracy within their average service life of 10 to 12 years. The City's Public Works staff has implemented a proactive meter replacement program with the goal to reduce system leakage and achieve a standard meter age of ten years or less.

2. Meter Calibration

The City must calibrate and maintain meters based on generally accepted industry standards and manufacturer information. Compliance will be maintained by the City by performing maintenance on the source and service meters every five to ten years at a minimum. Meter calibration is performed on an as-needed basis, typically when meter readings are inconsistent with customer consumption history.

3. Leak Detection and Water Accounting

Leak Detection – As leaks are discovered, they are repaired or mains are reconstructed as needed. One way we watch for system leaks is through our meter reading program. The City's Finance Department uses software that tracks the consumption history of each meter. If a meter shows a higher than average consumption level during any given billing cycle a maintenance worker is sent to the site to verify the reading. If the reading is accurate, the location is then investigated for potential leaks to prevent further water loss.

Future work to decrease distribution system leaks will focus on service meter replacement and close monitoring of non-revenue water usage. Non-revenue water uses include, but are not limited to, water used in street sweeping, vacuum truck sewer cleaning, and water line flushing.

4. Customer Education

Public Education – The City provides informational materials aimed at water use efficiency for customers on the City's website, www.cityofzillah.us, and at City Hall. Documents such as our annual water quality reports provide customers with information specific to the City's water systems as well as tips that they can use to practice efficient water use in their daily lives.

City of Zillah sends out seasonal water conservation tips to their customers in each Consumer Confidence Report to help prepare customers for the changing season.

5. **Water Loss Control Action Plan**

To control leakage, systems that do not meet the DSL standard must implement a Water Loss Control Action Plan (WLCAP). The City's rolling 3-year average DSL was 21 percent in 2009 and 13 percent in 2013 The City has increased recordkeeping and estimating of authorized water consumption uses such as construction, flushing and firefighting activities to reduce the amount of DSL in the system. The City will also conduct a leak detection survey of 25% of the total system in 2015, 2016 and 2017 to identify leaking water mains.

It is anticipated that the 2013 DSL of 14.49 percent will be reduced because of new record keeping practices and the completion of the leak detection surveys.

DRAFT

Current Measures

A minimum of five WUE measures must be evaluated or implemented for a system the size of the City of Zillah. To satisfy this requirement, the City has implemented, intends to implement or evaluate the WUE measures described below.

WUE Measures Implemented or to be Evaluated:

1. Ordinance Adoption/Modifications -Annual review of existing municipal code and ordinances related to water use and conservation is ongoing and aims to support long-range water resource planning efforts and goals of the City's water conservation program.

2. Customer Consumption History - The monthly utility statements that the City sends out to its customers indicate monthly water consumption. Customers may request a more detailed breakdown of water consumption history by allowing customers to track and compare their usage. Citizens can be informed of their own water use trends. The city normally contacts a customer that has had a couple of months of higher than normal bills. The awareness can allow them to evaluate their individual water conservation needs and alert them of potential leaks.

The WUE rule allows measures to be counted as multiple measures if they are applied to different customer classes. Consequently, because the City implemented Customer Consumption History for single-family, multi-family, commercial, education and government customer classes, it counts as five conservation measures.

The City of Zillah is investigating the ability to implement the Customer Consumption History on a yearly basis so that the customer may see what their consumption was a year ago.

3. Building Code and Land Use Program – The City has recently adopted the 2012 revision of the International Building Code as well as several others such as International Residential Code (IRC), Uniform Plumbing Code, International Property Maintenance Code (IPMC), and The International Fire Code (IFC), which will provide for the most up to date requirements for domestic water systems and low flow water fixtures.

Additionally, the city is looking into Low Impact Development (LID) measurers that will assist in further water conservation within the city.

4. Conservation Education Information

City of Zillah will consider offering more frequent educational information outlining more efficient indoor and outdoor water use during each billing cycle. Quarterly educational tips would target the high users of water in the area. City of Zillah may educate the public about why water conservation is important and why there is a particular need to lower water usage during the peak months of June, July, and August. Conservation tips would address seasonal topics such as outdoor water reduction in the

DRAFT

yard, and during the winter months will focus on indoor leak prevention tips. The city will also send the *Stop Water Waste* brochure provided by Washington State Department of Health, once a year.

Cost & Water Savings Estimate of Measures

1. *Ordinance Adoption/Modifications-* Annual review of existing municipal code and ordinances related to water use and conservation

   WUE Measure Cost Estimate: $500 for preparation of materials

   Estimated Water Savings: Unknown; however, it is anticipated that educating customers on the need to identify and repair potential leaks will contribute significantly to the goal of reducing single-family residential consumption.

   WUE Measure Action Status: Scheduled for implementation in 2015.

2. Customer Consumption History – Currently, monthly water bills show the previous and present meter readings to provide user consumption total for the month. This measure will further educate the public on the purpose of water conservation and the benefits of reducing excessive and/or unnecessary water use. Minimal costs associated with this measure include preparing the notification language to print the selected message. The low cost of implementing this measure makes it an effective way to accomplish the specified efficiency goal.

   WUE Measure Cost Estimate: $200 for preparation of materials

   Estimated Water Savings: Unknown; however, it is anticipated that educating customers on the need to identify and repair potential leaks will contribute significantly to the goal of reducing single-family residential consumption.

   WUE Measure Action Status: Scheduled for implementation in 2015.

3. Building Codes and Land Use Program- Adoption of updated biding, fire, plumbing, and property maintenance codes.

   WUE Measure Cost Estimate: $500 for updated materials (i.e. 2012 IBC, IFC, UPC, IPMC, etc.)

   Estimated Water Savings: Unknown; however, it is anticipated that water saving fixtures and facilities will contribute significantly to the goal of reducing single-family residential consumption.

   WUE Measure Action Status: Scheduled for implementation in 2014.

4. Conservation Education- Conservation Education is currently done during the annual Consumer Confidents Report however the city will start to add additional information to the city website and send out a brochure on water waste as well.

DRAFT

WUE Measure Cost Estimate: $500 for materials

Estimated Water Savings: Unknown; however, it is anticipated that educating customers on the need to identify and repair potential leaks will contribute significantly to the goal of reducing consumption.

WUE Measure Action Status: Ongoing (CCR) and new material addition by 2015.

A summary of the estimated costs to implement the selected measures, their estimated water savings, and overall cost-effectiveness are provided in Table 4. The City of Zillah will re-evaluate the effectiveness of the measure during each program update to determine its potential for future implementation.

TABLE 4- SUMMARY OF DEMAND SIDE WUE MEASURES

Measure Description	Implementation Cost	Year of Implementation	Projected Water Savings
Ordinance Adoption/Modifications	**$500/yr**	**Ongoing**	**Unknown**
Customer Consumption History	**$200**	**2015**	**Unknown**
Building Code and Land Use Program	**$500**	**2014**	**Unknown**
Conservation Education	**$500/yr + Annual CCR costs**	**Ongoing (CCR) and new material addition by 2015**	**Unknown**

A. Source and Service Meter Calibration- Zillah will begin calibrating all source meters every two years. The meters were calibrated at the time of installation or rehabilitation and have not been recalibrated since. Therefore, the City of Zillah plans to budget to have its flow meters calibrated in 2015 and recalibrated roughly every two years after that. Actual water savings from meter calibration is unknown, but if the accuracy of all source meters is improved by 0.5%, the resulting water savings could be as much as 879,000 gallons, considering that approximately 175 million gallons were pumped into the system in 2013. It should be noted that the opposite of water savings could result; therefore, it is unknown if distribution system leakage (DSL) will be reduced or how much water could be saved through meter calibration.

*WUE Measure Cost Estimate***:** $2,000 for a spare source meter and $1,000 annually for calibration of one source meter and half of the larger service meters.

Estimated Water Savings: Unknown; could potentially reduce DSL by 0.5%.

WUE Measure Action Status: To be completed in 2015.

B. Service Meter Replacement – In 2004, Zillah began upgrading all existing service meters to radio-read meters. Installation of the service meter upgrades will be completed in 2018. Radio-read meters have already reduced the time Zillah spends reading meters, and has reduced inaccuracies from older

worn or malfunctioning meters. Replacing the meters has also allowed the City to identify sources of excessive usage and possible leakage on the customer side of the meter. With use of radio-read meters, customers can easily be alerted of their excessive use and work with the City to eliminate the leakage. Installation of the new radio-read meters has reduced the difference between production and consumption volumes as well as overall water consumption within the City.

WUE Measure Cost Estimate: Approximately $10,000 per year.

Estimated Water Savings: Unknown.

WUE Measure Action Status: Implementation began in 2004, and should be completed by 2018.

C. Water Valve and Service Replacement –The City has replaced main line water valves and water services along various streets. The projects directly contributed to distribution system losses (DSL) by eliminating the aging and leaking, valves and services at these locations. The condition of all system valves and water services is unknown, but leaking is suspected, especially at main line valve locations. The City will identified inoperable valves, putting large areas of water system users at risk for contamination and water loss during a water main break. Replacement of these aging, inoperable valves will likely reduce the current DSL percentage. A water valve replacement project may be scheduled as a recommended future improvement. If so, the City will replace valves known to be inoperable and leaking, and will replace those in the poorest condition first.

WUE Measure Cost Estimate: $10,000 per year.

Estimated Water Savings: Unknown, but potentially significant reduction in DSL.

WUE Measure Action Status: Project may be scheduled for 2016.

The above costs and estimated water savings of the identified supply side measures have been summarized in Table 5.

TABLE 5-SUMMARY OF SUPPLY SIDE WUE MEASURES

Measure Description	Implementation Cost	Year of Implementation	Projected Water Savings
Source and Service Meter Calibration	**$1,000**	**2015**	**Unknown**
Service Meter Replacement	**$10,000 per year**	**Complete by 2018**	**Unknown**
Water Valve and Service Replacement	**$10,000 per year**	**2016**	**Unknown**

The City plans to budget funds each year for the next six-year period to fund the WUE measures listed above in Table 4 & 5. These budget amounts are reflected in the proposed City of Zillah financial plan in Chapter 9 of Comprehensive Water System Plan.

DRAFT

Reclaimed Water Opportunities

The WUE rule requires the City to collect information on reclaimed water opportunities and include that information in the water plan. At a minimum, the information should include:

- Where reclaimed water could potentially be used, such as parks, golf courses, groundwater recharge facilities, and car washing facilities.
- Where reclaimed water production facilities exist and the locations of reclaimed water distribution lines.
- Any barriers to the use of reclaimed water, such as cost, permitting issues, water rights mitigation, and local regulations that govern the use of reclaimed water.
- Contractual obligations and agreements that limit the use of reclaimed water.
- Where reclaimed water is used or proposed to be used.
- The City's efforts to develop the use of reclaimed water.

There are currently no water reuse facilities, either sources or users, within the city service area and the number of potential sources is very limited. There are only a couple of commercial/ industrial process facilities in the area which use municipal water for their processes. There are no fish hatcheries or storm water impoundments in the service area. The city sewage treatment facility is a likely source for reclaimed water. The combination of the costs of adding secondary level treatment requirements to the waste water treatment plant when used for irrigation, and of pumping and piping of reclaimed water to existing potential customers make reuse of treated wastewater economically unfeasible.

The cost of the additional treatment would be greater than current costs. Even greater would be the cost of constructing miles of transmission and distribution pipes to convey the treated wastewater to the points of application. The total amount of water that would be off-set from the City's supply would be relatively small considering the large cost of additional treatment and conveyance. As a result, reuse of treated wastewater does not make sense for the City of Zillah at this time and is not something the City will pursue during the life of this Plan.

The City does, however, understand the importance of reuse of treated wastewater in potentially reducing demand for potable water. Zillah will continue to evaluate the use of reclaimed water and will pursue any viable opportunities that are identified.

All Water Use Efficiency measures currently implemented and those that may be implemented by the City of Zillah in the future; will be funded from the most current Water Operations and Maintenance portion of the city budget.

Evaluation of Rate structures

DRAFT

The City of Zillah currently uses a declining block rate (charge per unit of water decreases with higher use). The City of Zillah is reviewing historic pricing and doing a cost benefit analyses to determine a competitive rate structure. The City is reviewing rate structure strategies that will provide financial sustainability as well as encourage high water users to reduce usage during the summer months of June, July, and August. Several under consideration are listed below**.**

- **Uniform rate plus seasonal surcharge for high usage**

This option focuses on conservation in peaking and average use system-wide. All residential customers pay a base charge, plus a uniform rate for each 1000 gallons of water used. Over a certain level of use, the surcharge is applied and the user pays a higher rate per 1000 gallons over the set level of use. Typically this surcharge takes effect in warm-weather months (May, June, July and August). It is the easiest method to implement, and can encourage businesses and industry to reduce their use during seasonal peaks and thus extend the capacity of existing assets. A potential drawback is that there is little latitude in setting the surcharge rate without reducing the uniform rate.

- **Inclining Block Rate Structure**

This option targets conservation at peaking and average use within customer classes. All customers in the same class (residential, commercial, industrial etc.) pay a base rate per unit of water used, under a certain threshold of water use. For any use above the set threshold, a higher rate per unit of water used is charged. Additional volume blocks can be defined where higher rates are charged. The inclining block rate structure and rates for residential customers may be different from that of commercial and industrial customers. This option can target high volume users better than using individualized rates; it is effective throughout year; and it works best when customer classes are fairly homogenous. Three or more pricing tiers are recommended.

- **Individualized rates**

This is a version of inclining block rates in which the blocks or tiers are determined for each customer by the customer's usage history. It targets individual customers peaking and average use. The first block/tier is generally set based on the customer's usage during the winter months and is typically re-evaluated annually. Individualized rates can encourage conservation even at the lower volume range. Potential drawbacks are that software modifications may be more extensive than for other methods, and individuals can artificially raise their winter average to gain a higher block/tier structure. Also, this option may not successfully capture high-end water users.

- **Lifeline Rates**

This option applies to a provider using the inclining rate structure, but adds a volume block lower than the base volume block (for example, 0 – 3 ccf or 0 – 2000 gallons). It thus provides relief for low-income customers. Low-income households are charged lower rates on that portion of water consumption that provides basic needs for cooking and cleaning but then higher charges are levied on water consumption beyond that amount. The difference in revenues must be made up in the remaining blocks. Lifeline rates could apply to all customers regardless of income levels unless a process is developed to identify and maintain a database on low-income users.

- **Hybrid Rates.**

A conservation rate structure may use a combination of the above listed rate structures. An example would include having an inclining block rate structure with a summer surcharge. Additionally, an analysis of the customer class consumption may show a need for different conservation rate structures for different customer classes.

DRAFT

There are pros and cons to each method mentioned for both our water system and our customers. The city will evaluate the feasibility of adopting and implementing one of these conservation rate structures.

DISTRIBUTION SYSTEM LEAKAGE EVALUATION

Distribution system leakage (DSL) is defined as the difference between total water produced and all water consumed or purchased. We account for water within our system by examining supply and service meter data, and tracking water used for non-revenue producing purposes (maintenance and firefighting). Our records show that unaccounted for water losses in Zillah currently accounts for an average of 12.6% per year over the last three years.

Early *Conservation Planning Requirements* set the maximum allowable rate of lost and unaccounted for water, at 20% of total source production. We estimate our DSL rate was significantly higher in the 1990's and early 2000's, before Zillah experienced significant growth.

Our current DSL average represents the significant improvement in our distribution system leak evaluation program. Estimated amount of water the city has saved by implementing our current methods over the past 10 years is approximately 10%. This is a direct result of continuous work to eliminate steel water mains, and directly respond to water system leaks as they are discovered.

Inaccurate supply meters are not considered a likely source of the high distribution system leakage. All of the meters are relatively new and the readings are in line with the expected pumping capacity.

Service meter accuracy is considered a possible source of the high distribution system leakage. Some of the meters have been checked and were found to be within acceptable ranges. However, some of the meters are well over 15-years old and are likely inaccurate and in need of replacement.

Water usage from fire hydrants is considered another source of the high DSL. In more recent years, Zillah has placed greater emphasis on metering consumption from fire hydrants and now owns 3 hydrant meters to rent out to contractors. Zillah will continue to emphasize the importance of metering hydrant usage.

The current WUE Rule mandates that we achieve an average DSL of 10 % or less based on a three year rolling average. Historic Distribution System Leakage (Table 2), below, summarizes the current three year rolling average.

DRAFT

Table 2-Historic Distribution System Leakage ZILLAH WATER PRODUCTION AND CONSUMPTION 2007-2013					
(values are in million gallons)					
Year	**Production**	**Consumption**	**Un-Metered / Non-Revenue**	**DSL**	**DSL %**
2007	135.70	120.28	0.03	15.40	11.35%
2008	144.92	120.24	0.29	24.38	16.83%
2009	162.98	127.29	0.72	34.97	21.46%
2010	159.83	134.21	0.23	25.39	15.89%
2011	183.99	154.93	0.29	28.77	15.64%
2012	152.52	140.91	1.26	10.35	6.79%
2013	175.70	149.06	1.18	25.46	14.49%
Total	1,115.64	946.92	3.99	164.72	-
Average	159.38	135.27	0.57	23.53	14.77%
3-Yr. Ave.	170.74	148.30	0.91	21.53	12.61%

Target Water Savings Projections

It is anticipated that Zillah will realize a 1% reduction in the average equivalent residential unit annual water consumption through the implementation of water conservation measures. Table 3 provides the demand forecast for the year 2019 based on a 1% reduction in water consumption expected from the planned conservation measures.

DRAFT

Table 3-WATER DEMAND FORECAST FOR YEAR 2019 WITH CONSERVATION MEASURES

WATER DEMAND FORECAST FOR YEAR 2019 WITH WATER USE EFFICIENCY GOAL			
	Services	**Annual Demand (MG)**	**Average Day Demand (Gallons)**
Projected Demand	1,243	168.47	461,553
1% Consumption Reduction Goal	- -	1.68	4,616
Total	1,243	166.78	456,937

Annual Performance Reporting

City of Zillah must submit a performance report to the Department of Health by July 1st, and each year thereafter. The annual report must include:

- Total source production and system wide consumption
- Distribution system leakage in percentage and volume
- Goal description, schedule, and progress toward meeting goals

The Washington Department of Health, Office of Drinking Water (DOH) has developed a report form that must be used. DOH has also developed a spreadsheet to track monthly production and consumption volumes and calculated DSL volume and percentage. These reports will be made available to the public upon request.

WUE Program Effectiveness Evaluation

The City of Zillah will evaluate the effectiveness of the WUE program each year by calculating distribution system leakage and demands per single-family residence and comparing to prior years. The program will be amended as needed if reductions in distribution system leakage or demands are not seen.

DRAFT

Water Loss Control Action Plan

Summary

The Public Works Department is effectively working to reduce our Distribution System Leakage (DSL). We established a supply side goal to reduce DSL from 14.49 % to 8.0% by 2019. We expect to achieve 10% or less DSL by 2016.

Finding Apparent Losses

The first step is to find out more about our apparent losses by obtaining more accurate data. To do this, we aim to resolve our method of reading meters this year. We installed radio-read meters over the last couple of years to obtain more accurate consumption data year-round. We also plan to implement a system to account for the un-metered authorized water consumption, like hydrant flushing. We are continuing to identify any unauthorized connections without a meter tapped into the system.

Finding Real Losses

Another priority of ours is to identify sources of water loss within our system. We are looking into performing a leak detection survey. Initially in 2007, our calculated leakage was over 11%. We have experienced issues with the conversion to a new system of accounting for water. We are looking to reduce the DSL to an average of 10% within 3 years.

At this time, all city-owned buildings/facilities have meters installed. There are additional areas that need new meters that are broken. Work crews are in the process of replacing meters as funds become available.

We are exploring the idea of a new metered filling station for water trucks and the Fire Department. This will help us track previously unmetered authorized uses for trucks for cleaning streets, firefighting, or construction.

In addition, we have taken the following measures to reduce the annual volume of water loss:

1. Ordinance #400 enforces a $100.00 or imprisonment in the city jail for not more than 30 days or both such fine and imprisonment for unauthorized fire hydrant use.

2. Upgraded meter telemetry capabilities and reliability for increased monitoring of water production.

3. Quick and efficient response by staff to all known distribution leaks.

4. The replacement of aging and unreliable water mains.

5. An annual leak detection program that will survey a minimum of 25% of our total water mains every year until compliance is achieved.

DRAFT

Funding Our Water Loss Program

The Public Works department staff and city council have made both a financial and philosophical commitment to using our water effectively and wisely, now and into the future. Through review of our rate structure and by actively seeking out funds for needed system improvements/repairs, we expect to meet our DSL reduction goal. We will achieve this by:

• Seeking Funding Opportunities: We will actively seek funding to repair our aging infrastructure, which is over 50 years old in some areas.

DRAFT

WUE PROGRAM GOAL ADOPTION

RESOLUTION 2014-49

A RESOLUTION OF THE CITY OF ZILLAH, WASHINGTON, APPROVING THE WATER USE EFFICIENCY PROGRAM (WUE)- GOALS & POLICIES AS DEVELOPED FOR THE CITY OF ZILLAH, WASHINGTON.

WHEREAS, a Water Use Efficiency Program (WUE)- Goals & Policies has been developed for the City of Zillah, Washington by City staff and City engineers, and;

WHEREAS, a Determination of Non-Significance has been issued and no appeal has been made to it, and;

WHEREAS, the Department of Ecology has provided comment and their input has been incorporated within the plan, and;

WHEREAS, a duly published open record public hearing was held before the Zillah Planning Commission on October 21, 2014, and;

WHEREAS, a duly published closed record public hearing was held before the Zillah City Council on November 3, 2014, and;

NOW THEREFORE BE IT RESOLVED by the City Council for the City of Zillah, Washington as follows:

Section 1. Approval of Water Use Efficiency Program (WUE)- Goals & Policies: The Water Use Efficiency Program (WUE)- Goals & Policies as developed for the City of Zillah, Washington, is hereby approved and adopted and from and after the effective date of this Resolution, shall be the Water Use Efficiency Program for the City of Zillah until such time as the Plan is amended, repealed, or otherwise changed.

Section 2. Effective Date: This Resolution shall be effective from and after its passage and approval and other notice requirements as required by law.

PASSED BY THE CITY COUNCIL OF THE CITY OF ZILLAH, WASHINGTON this 3rd day of November, 2014.

Gary V. Clark

Gary Clark, Mayor

ATTEST:

Sheri Crawford

~~Sharon Bounds, City Clerk/Treasurer~~
Shelli Crawford, Administrative Asst.

APPROVED AS TO FORM:

Jamie Carmody, City Attorney

Date passed by Council:

The City Of Zillah
THE HEART OF WINE COUNTRY

City of Zillah Planning Commission
Findings & Recommendation
File No.: ER 2014-19 & CPA 2014-20
October 21, 2014

THIS MATTER having come for public hearing before the *City of Zillah Planning Commission* on October 21, 2014 for the purpose of considering the City of Zillah's Comprehensive Water Plan.

Description of Proposal
City of Zillah is proposing to update its Comprehensive Water Plan includes the Water Use Efficiency (WUE) Program in Chapter 4 of the CWP. These documents are being adopted to allow the City of Zillah to comply with state law. The 2014 Comprehensive Water Plan outlines the current and future consumption rates as well as outlines the future upgrades to the City of Zillah's water system.

Jurisdiction
ZMC 17.06.030 indicates that Comprehensive Plan Amendments are processed as a Class 3 Review. Class 3 Reviews are held before the Zillah City Council with recommendations presented from Zillah Planning Commission. Decisions of City Council are final, unless a request for reconsideration is filed. An appeal of a City Council decision can be filed in Superior Court.

Environmental Review and Determination
The City of Zillah, as lead agency for this proposal, had determined that it will not have a probable significant adverse impact on the environment and an Environmental Impact Statement (EIS) was not required under *RCW 43.21C.030(2)(c)*. The Determination of non-significance (DNS) was issued under WAC 197-11-340(2) on October 14, 2014.

RECOMMENDATION
Upon holding a public hearing on this matter, in which there was opportunity for persons to speak in favor or against the Comprehensive Water Plan, the Planning Commission deliberated on this matter and recommends to the Zillah City Council that the 2014 Comprehensive Water Plan be adopted by the City of Zillah.

MOTION TO RECOMMEND ADOPTION OF CITY OF ZILLAH 2014 COMPREHENSIVE WATER PLAN, WATER USE EFFICIENCY (WUE) PROGRAM- GOALS & POLICIES, AND ADOPT FINDINGS OF FACT BY ***Mr. Javier Lopez***, SECONDED BY ***Mrs. Carol Wane***: VOTE: **6-0**

As Chairman of the City of Zillah Planning Commission, I hereby attest to the Planning Commission Recommendation as stated above:

Jay Spurlock
Zillah Planning Commission Chairman

Date: 10/21/14

The City Of Zillah
THE HEART OF WINE COUNTRY

CITY OF ZILLAH
PUBLIC HEARING
October 21, 2014
7:00 P.M.

Findings of Fact

STAFF REPORT
2014 Comprehensive Water Plan & Water Use Efficiency Program
File No.: ER 2014-19 & CPA 2014-20

INTRODUCTION

The City of Zillah recognizes the need to improve and expand its water system if it is to meet the demands of its system users and to keep pace with other growth-oriented improvements. Huibregtse, Louman Associates, Inc. was authorized by the City of Zillah to prepare the 2014 Comprehensive Water Plan (CWP), which represents the culmination of planning and data collection efforts.

Description of Proposal

City of Zillah is proposing to update its Comprehensive Water Plan includes the Water Use Efficiency (WUE) Program in Chapter 4 of the CWP. These documents are being adopted to allow the City of Zillah to comply with state law. The Comprehensive Water System Plan outlines the current and future impacts as well as the future upgrades to the City of Zillah's water system. This document is being adopted to allow the City of Zillah to comply with state law. The 2014 Comprehensive Water Plan outlines the current and future consumption rates as well as outlines the future upgrades to the City of Zillah's water system.

Jurisdiction

ZMC 17.06.030 indicates that Comprehensive Plan Amendments are processed as a Class 3 Review. Class 3 Reviews are held before the Zillah City Council with recommendations presented from Zillah Planning Commission. Decisions of City Council are final, unless a request for reconsideration is filed. An appeal of a City Council decision can be filed in Superior Court.

Environmental Review and Determination

The City of Zillah, as lead agency for this proposal, had determined that it will not have a probable significant adverse impact on the environment and an Environmental Impact Statement (EIS) was not required under *RCW 43.21C.030(2)(c)*. The Determination of non-significance (DNS) was issued under WAC 197-11-340(2) on October 14, 2014.

Comments

The comment period on the environmental impacts of this proposal was between September 18th and October 6, 2014. Comments were received by Sunnyside Valley Irrigation and Washington State Department of Ecology.

Sunnyside Valley Irrigation (SVID) expressed the need to seek a permit if runoff and stormwater must enter SVID facilities. They also provided information regarding their existing facilities within the service area. They also stated that buildings will not be allowed in their right-of-way and that plats and/or subdivisions will not be allowed on SVID operation and maintenance roads.

The Washington State Department of Ecology sent a letter granting an extension on the city's requirement to provide Proof of Appropriation of Water. Another letter from the same agency stated that the city's water plan was "not inconsistent" with the approved watershed plan that was adopted under RCW 90.82 or RCW 90.54. The letter also acknowledged the extension to the city's water right.

Staff Recommendation

Based on the above findings of fact, a review of the 2014 Comprehensive Water Plan and comments from affected agencies, staff recommends **approval** of the Comprehensive Water Plan.

WATER SYSTEM PLAN
CONSUMER INPUT PROCESS

City of Zillah
Study Session Minutes
November 3, 2014

CALL TO ORDER

The meeting was called to order by Mayor Gary Clark at 6:04 p.m.

ROLL CALL

The following were:

Present: Mayor Gary Clark, Councilmembers Skyler Bower, Doug Stewart, Janice Gonzales, Brian Williams and Jeff Miles

Also Present: Police Chief Dave Simmons, Public Works Director Tim Tilley, City Administrative Assistant Shelli Quantrell, Associate Planner Ardele Steele and City Attorney Jamie Carmody

Absent Fire Chief/Bldg. Inspector Dan Hargroves

CONSENT AGENDA

A. Review minutes of Study Session dated October 20, 2014.
B. Review minutes of Council Meeting dated October 20, 2014.
C. Review WA ST Liquor License for Squeeze Inn Restaurant and Lounge, INC.
D. Review payroll voucher numbers 31515 to 3 dated in the amount of $95,905.34.
E. Review claim voucher numbers 44248 to 44299 in the amount of $43,573.78.

NEW BUSINESS

Presentations from YV Newspaper: Ms. Quantrell handed out the request for funding from Yakima Valley Newspaper for the Hotel/Motel Tax in the amount $2,995.00.

Review Resolution No. 2014-49/Adopting Goals & Policies RE: WUE: Ms. Steele explained that the Washington State Legislature passed the Municipal Water Supply-Efficiency Requirements Act as part of an effort to reform the state's water laws. She stated that the Department of Health required that the WUE goals and policies be reviewed and approved. This is keeping the City of Zillah in compliance with that Act.

Review 2014 Water Comp Plan & Amendments: Ms. Steele stated that she would like to continue the Public Hearing for the Water Comp Plan & Amendments to the next City Council meeting because she is waiting for the Department of Health to issue some plans. Dustin Posten P.E., with Huibregtse, Louman Associates, Inc. explained that there are various proposed projects within the Water Comp Plan and he is waiting for financial information to come in.

Review Ordinance No. 1363/Ad Valorem: Ms. Quantrell explained that the Ordinance is similar to the one the City approves each year in order to levy and collect our property taxes. The increase is 1%.

Review Ordinance No. 1364/2015 Garbage Rates: Ms. Quantrell explained that Yakima Waste visited a few weeks ago and requested a 2.5 % increase to their rates. This is calculated strictly as a pass through cost with no additional mark-up value to the City.

Review Ordinance No. 1365/2014 Salaries: Ms. Quantrell stated that the attached Ordinance setting wages reflect to add the part-time Fire Chief. It was felt that bringing him on to work with the current Fire Chief the next two months would be a good idea. Ms. Gonzales asked if a Budget Amendment would be needed and it was stated that the budget will be monitored.

Review Resolution No. 2014-50/Firepoints: Ms. Quantrell reported that this policy is being revised to include language related to the pay date for firepoints.

Review Resolution No. 2014-51/2015 Interlocal Corrections/Detention Agreement with Yakima County: Chief Simmons stated that this is the Annual Agreement to provide jail services for the City of Zillah.

Review Letter of Intent with DNR: The City has been in the process of purchasing the sewer property from the Department of Natural Resources (DNR). They have sent a Letter of Intent for the Mayor to sign so that they can move forward with the appraisal of the property.

Review 2015 Preliminary Budget: Ms. Quantrell highlighted several areas of the 2015 preliminary budget and discussion was held. The Committee assignments have been updated to include the Home Consortium Board. Notes on item 5 and 6 have been updated and the wish list for the Departments had been submitted. Ms. Quantrell also stated that the Mayors proposal for the Motel Tax dollars is included and a new Staff Restructure sheet is done.

COUNCIL/STAFF REPORTS

Zillah Police Department: Chief Simmons stated that all police vehicles are now back in rotation.

EXECUTIVE SESSION

Mayor Clark called for Executive Session at 6:25 p.m. for 30 minutes in order to discuss issues as per RCW 42.30.110(g). Executive Session ended at 6:55 p.m. and Regular Session began.

ADJOURNMENT

Mayor Clark adjourned the meeting at 7:00 p.m.

Shelli Quantrell, Administrative Assistant

Mayor Gary Clark

City of Zillah
City Council Minutes
November 3, 2014

CALL TO ORDER

The meeting was called to order by Mayor Gary Clark at 7:00 p.m.

ROLL CALL

The following were:

Present: Mayor Gary Clark, Councilmembers Skyler Bower, Doug Stewart, Janice Gonzales, Brian Williams and Jeff Miles

Also Present: Police Chief Dave Simmons, Public Works Director Tim Tilley, City Administrative Assistant Shelli Quantrell, Associate Planner Ardele Steele and City Attorney Jamie Carmody

Absent Fire Chief/Bldg. Inspector Dan Hargroves

CONSENT AGENDA

Mr. Miles moved, seconded by Ms. Gonzales to approve the Consent Agenda items A through E as follows:

A. Approve minutes of Study Session dated October 20, 2014.
B. Approve minutes of Council Meeting dated October 20, 2014.
C. Approve WA ST Liquor License for Squeeze Inn Restaurant and Lounge, INC.
D. Approve payroll voucher numbers 31515 to 3 dated in the amount of $95,905.34.
E. Approve claim voucher numbers 44248 to 44299 in the amount of $43,573.78.

Motion carried unanimously.

PUBLIC HEARING

2015 Ad Valorem: Mayor Clark opened the Public Hearing at 7:00 p.m. No public comment was given. Mayor Clark closed the Public Hearing at 7:01 p.m.

2015 Preliminary Budget: Mayor Clark opened the Public Hearing at 7:01 p.m. No public comment was given. Mayor Clark closed the Public Hearing at 7:02 p.m.

Goals & Policies related to WUE: Mayor Clark opened the Public Hearing at 7:02 p.m. No public comment was given. Mayor Clark closed the Public Hearing at 7:03 p.m.

Water Comp Plan & Admendment: Mayor Clark opened the Public Hearing at 7:03 p.m. Ms. Steele asked that there be a motion to continue the Public Hearing to November 17, 2014 meeting. *Mr. Bower moved, seconded by Mr. Stewart to continue the Water Comp Plan & Amendment Public Hearing to November 17th. Motion carried unanimously.* Mayor Clark continued the Public Hearing to November 17, 2014.

NEW BUSINESS

Vote on Resolution No. 2014-49/Adopting Goals & Policies RE: WUE: *Mr. Williams moved, seconded by Ms. Gonzales to approve Resolution No. 2014-49 approving the Water Use Efficiency Program Goals and Policies. Motion carried unanimously.*

Vote on Ordinance No. 1363/Ad Valorem: *Ms. Gonzales moved, seconded by Mr. Williams to approve Ordinance No. 1363/2015 Property Taxes. Motion carried unanimously.*

Vote on Ordinance No. 1364/2015 Garbage Rates: *Ms. Gonzales moved, seconded by Mr. Williams to approve Ordinance No. 1364/2015 Garbage Rates. Motion carried unanimously.*

Vote on Ordinance No. 1365/2014 Salaries: *Mr. Stewart moved, seconded by Mr. Bower to approve Ordinance No. 1365/2014 Salaries. Motion carried unanimously.*

Vote on Resolution No. 2014-50/Firepoints: *Mr. Bower moved, seconded by Mr. Williams to approve Resolution No. 2014-50 establishing guidelines for Firepoints and Compensation earned by volunteer Firefighters. Motion carried unanimously.*

Vote on Resolution No. 2014-51/2015 Interlocal Corrections/Detention Agreement with Yakima County: *Mr. Miles moved, seconded by Ms. Gonzales to approve Resolution No. 2014-51 approving the 2015 Interlocal Corrections/Detention Agreement with Yakima County for jail services. Motion carried unanimously.*

Vote on Letter of Intent with DNR: *Mr. Williams moved, seconded by Ms. Gonzales to authorize the Mayor to sign the Letter of Intent between City of Zillah and DNR. Motion carried unanimously.*

ADJOURNMENT

Mr. Williams moved, seconded by Ms. Gonzales to adjourn the meeting at 7:18 p.m.. Motion carried unanimously.

Shelli Quantrell, Administrative Assistant

Mayor Gary Clark

CITY OF ZILLAH
MUNICIPAL CODE

Chapter 13.08
WATER SYSTEMS

Sections:

Article I. Domestic Water and Sewer Facilities

13.08.010 Intent.
13.08.020 Minimum standards.
13.08.030 Adoption of standard specifications.
13.08.040 Violation – Penalty.

Article II. Water Rates

13.08.045 Connection to domestic water system.
13.08.050 Minimum rates within city limits.
13.08.055 Rates in excess of minimum charge.
13.08.060 Rates within city limits when no meter exists.
13.08.065 Surcharge for users outside city limits.
13.08.070 Penalty provision.
13.08.075 Governmental entity – Payment.
13.08.080 Lien provision.
13.08.090 Irrigation water.
13.08.092 Municipal irrigation water.
13.08.095 Capital recovery reimbursement costs.
13.08.100 Capital cost recovery areas.
13.08.115 Disconnections and reconnections.
13.08.116 Disconnections at rentals.
13.08.117 Definition of timely basis.
13.08.118 Additional charge for city water.

Article III. Prohibited Acts

13.08.120 Drawing water from another's pipes without city permission.
13.08.130 *Superseded.*
13.08.135 *Superseded.*

Article IV. Cross-Connections

13.08.140 Purpose of article.

13.08.150 Definition of cross-connection.
13.08.160 Cross-connections prohibited.
13.08.170 Existing cross-connections.
13.08.180 Duties of public works administrator.
13.08.190 Discovery of hazard – Abatement.
13.08.200 Violation – Penalty.

Article I. Domestic Water and Sewer Facilities

13.08.010 Intent.

This article is intended to provide minimum standards for the construction of domestic water and sewer facilities within the city. The city intends to use the Standard Specifications for Municipal Public Works Construction as the minimum required standards for future construction within the city. All future public works construction after the effective date of the ordinance codified in this article shall be in compliance with said standards. (Ord. 618 § 1, 1987; Ord. 557 § 1, 1985)

13.08.020 Minimum standards.

No person shall construct any domestic water or sewer facility within the city unless said construction has specifications which are at a minimum the Standard Specifications for Municipal Public Works Construction. (Ord. 618 § 2, 1987; Ord. 557 § 2, 1985)

13.08.030 Adoption of standard specifications.

The city adopts the Standard Specifications for Municipal Public Works Construction as prepared by the Washington State Chapter of American Public Works Association. This adoption by reference includes all future amendments and changes to said Standard Specifications for Municipal Public Works Construction which are prepared by and adopted in the future by the Washington State Chapter of American Public Works Association. A copy of said Standard Specifications for Municipal Public Works Construction can be obtained from the city public works superintendent at a cost to be determined. (Ord. 618 § 3, 1987; Ord. 557 § 3, 1985)

13.08.040 Violation – Penalty.

Any person who shall violate any provision of this article shall be guilty of a misdemeanor and on conviction thereof shall be fined in an amount of not more than $500.00 for each violation, or jailed for a period not to exceed 30 days, or both such fine and incarceration. In addition, any violation of this article shall be deemed to be a public nuisance, subject to prevention or abatement by injunction or other appropriate legal remedies in a court of competent

jurisdiction. (Ord. 618 § 5, 1987; Ord. 557 § 5, 1985)

Article II. Water Rates

13.08.045 Connection to domestic water system.

A connection charge is imposed on the owner of any lot of facility to be connected to the domestic water system, when the owner of the lot or facility to be so connected has not paid a domestic water connection charge for connecting such lot or facility to the domestic water system. The cost for making a new service connection shall be the responsibility of the property owner/applicant. No water service will be provided until the connection fee general facility charge has been paid in full, and no second or subsequent service connection will be allowed unless all previous connection fees have been paid in full.

A. New Connections. City shall review and approve all new connections to the public domestic water system. Such connections shall be subject to the charges and requirements of this chapter.

1. Meter Size and Charge. The public works director shall determine appropriate meter size for proposed service, uses and facilities. A domestic charge shall be determined by the size of the water meter to be installed based upon the following chart:

3/4 inch	$600.00
1 inch	$780.00
1-1/2 inches	$1,080
2 inches	$1,440
3 inches	$1,800
4 inches	$2,160

City shall provide and install any required meters of one inch or less. The provisions shall include the cost of the meter, vault, backflow device and cost of installation.

2. Meters Greater Than One Inch. For connections requiring meters that are greater than one inch in size, the cost of the meter, vault, backflow device and installation shall be the responsibility of the property owner/applicant. For any facility to be served by a water meter that is larger than four inches in diameter, public works director shall calculate a recommended domestic charge pursuant to this subsection. The recommended domestic charge shall be calculated in a manner consistent with the methodology utilized for calculation of rates set forth herein.

B. Replacement of Existing Meters. City shall provide meters for replacement of obsolete, defective and/or worn out meters caused by reasonable wear and tear and as determined reasonable and appropriate by public works director. Replacement shall apply only to meters of one inch or less in size. City shall not provide replacement meters in any other circumstance. Replacement of larger meters shall be the responsibility of the property owner. All costs for meter (i.e., larger than one inch), installation, supplies and labor shall be the sole responsibility of the property owner.

C. Standards for Installation. All new and/or replacement meters shall be installed by the city or under the supervision of the public works director or his/her designee. Plans and specifications may be further required by public works director as may be reasonable or appropriate for the installation.

D. General Facility Charge. A general facility charge (GFC) is based on equivalent residential units (ERU). An ERU is a baseline number representing average residential household water consumption as defined in the most recent city of Zillah Comprehensive Water System Plan. An ERU for standard residential connections shall be equal to $2,000. For nonresidential and nonstandard residential connections requiring more than one ERU, the following shall apply:

1. Estimate of Water Usage. An applicant/property owner for a nonresidential and/or nonstandard residential connection shall prepare an estimate of the required water service ERU for the proposed use and/or facility. Such estimate shall be reviewed by public works director (or his designee) and a final use estimate determined for the use and/or facility. The estimate may be based upon the Department of Health and Department of Ecology estimates (as defined in their most recent respective design guidelines), this comprehensive water plan, and/or assessment of similar connections and uses.

2. Payment of GFC. The property owner/applicant for the water service shall pay a GFC based upon the use evaluation (e.g., if a nonresidential or nonstandard residential customer uses 20 times the flow of the average household, this use would be expressed as 20 ERUs). This number shall be rounded to the nearest one-tenth ERU and the GFC based on a rate of $2,000/ERU.

3. Monitoring – Additional Charge. City shall have the right to evaluate and monitor metered water use for a period of 24 months to determine the actual number of water ERUs utilized by the use and/or facility. If it is determined that the actual ERUs are greater than the estimated ERUs, the city shall establish the amount of such excess use and

charge property owner for the increased general facility charger (GFC).

4. Use Greater Than 20 ERUs. City reserves the right to negotiate GFCs for activities or uses that are determined to use greater than 20 ERUs that can clearly show a substantial increase in property value to the city's service area. The following criteria shall be used in determining a GVC reduction:

a. An applicant that proposes a use and estimates that more than 20 ERUs may be required shall submit, in writing, a request to the city to negotiate the GFC.

b. If the applicant chooses to negotiate the GFC, they shall submit relative and factual information in writing regarding the proposed property value increase. City shall verify the applicant's information and may also provide additional information on the proposed property value increase and set a date for city council review and consideration of the GFC.

c. City may at the same time use Yakima County tax assessor and building permit information to verify the subject property's value with those stated in the negotiated GFC. Assessor and building permit data may be determinative in the assessment of value for purposes of calculating and reduction in the negotiated GFC. If fair market property values or actual ERU data is different than the initial evaluation, city may make an appropriate adjustment in the GFC charge.

d. For every $1,000,000 of proposed property value increase, city may reduce the GFC by one ERU that is above the initial 20 ERUs. At no time shall an activity generating more 20 ERUs be charged less than 20 ERUs.

5. Use Greater Than 50 ERUs. For activities that generate greater than 50 ERUs, city may also negotiate a reduction in GFC based on employment opportunities that the site would generate. In this case, in addition to other required information in this section, the applicant shall also submit any available information on number of potential employees and wages related to the site and its impact to the city. If a reduction in the GFC is granted through this subsection, it shall also be verified at 12 and 24 months. If true employment projections, or actual ERU data is different than the initial evaluation, city may make an appropriate adjustment in the GFC charge.

Any such granting of reducing a determined GFC shall include a finding of fact that clearly indicates the reasons for such a reduction and is approved by the city council.

6. Material Change in Usage. In the event that a material change in usage occurs which

increases the number of ERUs for a water service, the city may determine and issue an additional GFC based upon such increased usage. The determination may be based upon a monthly monitoring of water usage by the use and/or facility.

E. Change in Fees/Charges. The fees and charges established herein may be amended from time to time by ordinance of the city council. Any such amendments shall be based on changes in the city's cost of withdrawing, storing, distributing, planning, designing and/or maintaining domestic water service to the city's service area.

F. Schedule of Rates. The city shall maintain a schedule of current rates, fees and charges and make them available to all interested persons. (Ord. 1084 § 2, 2006; Ord. 946 § 2, 2001)

13.08.050 Minimum rates within city limits.

The minimum monthly charges for water supplied by city of Zillah shall be as follows:

	2011	2012	2013	2014	2015
WATER		**2% incr.**	**2% incr.**	**2% incr.**	**2% incr.**
Base rate per metered hook-up	$9.50	$9.69	$9.88	$10.08	$10.28

Such charge shall be for all water supplied up to a maximum of 300 cubic feet per month. (Ord. 1284 § 3, 2011)

13.08.055 Rates in excess of minimum charge.

Water users shall be charged the following rates per cubic foot (cu. ft.) of water used in excess of 300-cubic-foot minimum in any one calendar month:

	2011	2012	2013	2014	2015
WATER		**2% incr.**	**2% incr.**	**2% incr.**	**2% incr.**
300 – 1,000 cu. ft.	0.024	0.0244	0.0249	0.0254	0.0259
1,001 – 2,000 cu. ft.	0.022	0.0224	0.0228	0.0233	0.0238
2,001 – 3,000 cu. ft.	0.012	0.0122	0.0124	0.0127	0.0129
More than 3,000 cu. ft.	0.007	0.0071	0.0072	0.0074	0.0075

(Ord. 1284 § 4, 2011)

13.08.060 Rates within city limits when no meter exists.

In the event no water meter is available to the user of city water so that the water so used by the resident may be measured, said water shall be charged at a minimum price of $26.83 per entity for each calendar month that water is supplied to said water user. (Ord. 1284 § 5, 2011)

13.08.065 Surcharge for users outside city limits.

The charges for all entities outside the corporate limits of the city of Zillah, with or without a meter, shall be charged an additional fee in excess of all corresponding rate charges inside the corporate limits of said city as follows:

	2011	2012	2013	2014	2015
		50% x base rate	50% x base rate	50% x base rate	50% x base rate
Surcharge for users outside city in addition to base rate	$3.25	$4.85	$4.94	$5.04	$5.14

(Ord. 1284 § 6, 2011)

13.08.070 Penalty provision.

A penalty of $15.00 shall be levied in the event that the said charges are not paid by the fifteenth of the month the bill is mailed. Nothing shall be credited or taken away from bills paid before the fifteenth of said month. (Ord. 1284 § 7, 2011)

13.08.075 Governmental entity – Payment.

In order to recognize billing cycles and timetables for governmental entities, any and all payments from governmental entities with respect to water charges shall be payable by the twentieth day of the month the bill is mailed. The penalty provisions shall not apply except in such instance as payment is not received by the identified due date. (Ord. 1284 § 8, 2011; Ord. 1075 § 7, 2005)

13.08.080 Lien provision.

In the event said bill is delinquent for more than three months, a lien shall be placed upon the property owner for said amount of delinquent charges and said service shall be disconnected until paid in full. (Ord. 1284 § 9, 2011)

13.08.090 Irrigation water.

All separate meters for irrigation water from domestic water shall be charged at the rate of $10.00 per 1,000 cubic feet or any portion thereof. (Ord. 1284 § 10, 2011)

13.08.092 Municipal irrigation water.

All separate meters for irrigation water from domestic water for municipal use shall be charged at the rate of $3.00 per 1,000 cubic feet or any portion thereof. (Ord. 1284 § 11, 2011)

13.08.095 Capital recovery reimbursement costs.

Anytime the city or an individual makes application for and complies with the provisions of Chapter 13.30 ZMC, Utility Reimbursement Agreements, and the city council so authorizes, any person or agency connecting to the sewer system in a reimbursement area shall be responsible to pay for reimbursement costs associated with sewer system improvements to a particular geographic area. (Ord. 946 § 3, 2001)

13.08.100 Capital cost recovery areas.

A. Establishment of Capital Cost Recovery Areas. Capital cost recovery areas (as shown in Attachment A) are hereby established for the purpose of assessing fees to specially benefited properties for the purpose of recovering capital costs for provision of improved water storage, fire flow capacity, water service pressure and associated water service capabilities.

B. Establishment of New Water Connection Fees for Specific Benefit Districts. Fees shall be assessed for new water connections within the capital cost recovery areas established herein. Such fees have been calculated based on water system funds expended to construct the identified capital improvements. Benefit area assessment fees per equivalent residential service (ERU) for new connections to the city water system will be assessed as follows:

West Zillah ERUs	$825
Zone 2 ERUs	$1,250
All Other	$400

Such fees shall be in addition to any costs or fees already in existence. New non-single-family residential water service connections will be assessed fractional or multiple ERU benefit area assessment fees as per this chapter.

D. Expenditures of Funds. Monies collected from connection fees for new water connection for specific benefit districts shall be expended exclusively for costs associated with future water capital improvements. The city clerk/treasurer shall maintain an accurate accounting of said collections and expenditures.

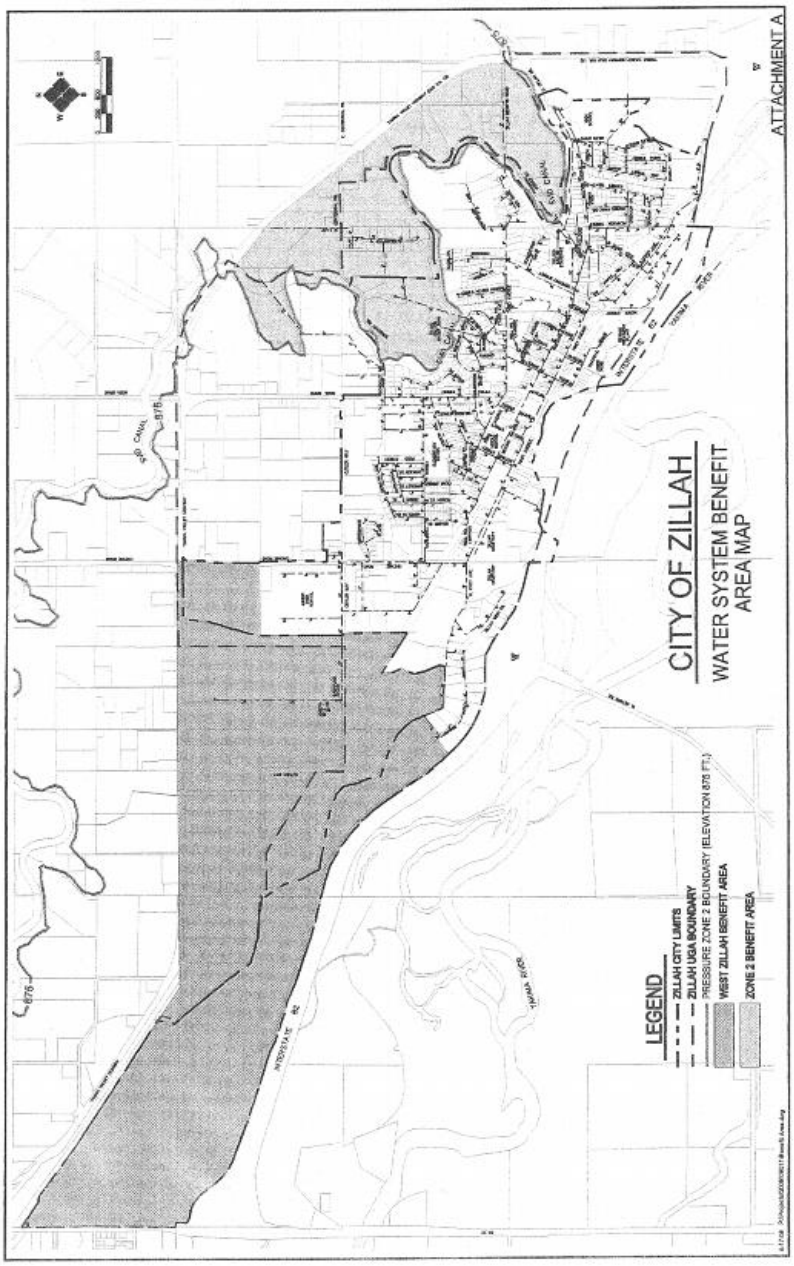

(Ord. 1162 §§ 1 – 4, 2008)

13.08.115 Disconnections and reconnections.

A. In addition to other lawful remedies to the city, with regard to the collection of delinquent water charges, the public works director of the city is authorized to discontinue delivery of water to any residence when the occupant thereof has failed to pay the delinquent water charges within 10 days after the water charges become delinquent. Water charges are

deemed to be delinquent if not paid by 5:00 p.m. on the fifteenth day of the month following the month of billing. In the event the public works director discontinues water service and delivery to a residence, then delivery of water shall not be commenced until full payment of all delinquent amounts, including reconnection charges and penalties thereof, is made. Charges for connection shall be $25.00 if reconnection is requested between the hours of 9:00 a.m. and 4:30 p.m. on week days which are not holidays, or $50.00 if reconnection is requested at any other time.

B. Deposit Requirement. Prior to commencing utility service connection to any person not presently paying utility charges to the city of Zillah, Washington, said person requesting such delivery and service shall be required to deposit to the city the sum of $100.00. Said deposit shall be refunded to the person making the same after a one year period of time and on the condition that all utility charges billed by the city of Zillah to said person have been paid on a timely basis, as defined in ZMC 13.08.117. Said deposit, less any outstanding charges, may also be refunded and returned to said person upon a request that utility service be discontinued to said person.

Any person changing residences within the area served by Zillah utilities who request said services from the city will not be required to make a deposit if a deposit previously made is in the city's possession. Such deposits shall be returned 12 months after being made even though there has been a change in residence if all billings are paid timely.

Any person changing residences within the area served by Zillah utilities and who request said services from the city will not be required to make a deposit if said person has previously received utility service from the city and person has timely paid all billings for a period of one year. (Ord. 1050 § 1, 2005; Ord. 806 § 1, 1995; Ord. 742 § 1, 1993; Ord. 583 § 1, 1985; Ord. 502 § 1, 1983; Ord. 256[1] § 605, 1955)

13.08.116 Disconnections at rentals.

At any such time that a charge for domestic water imposed by the authority of this chapter has been delinquent for 10 days, the city public works director is authorized to discontinue delivery of domestic water to said residence. Said public works director shall discontinue water to said residence irrespective of whether persons other than those whose incurred the water charges now occupy the rental premises. The procedures for disconnections and reconnections set forth in ZMC 13.08.115 shall apply to a disconnection under the authority of this section. (Ord. 923 § 3, 2000)

13.08.117 Definition of timely basis.

"Timely basis" means prior to the assessment of penalty. (Ord. 706 § 2, 1991)

13.08.118 Additional charge for city water.

In addition to the rates per calendar month otherwise established by ordinance for city water supplied per entity to any person, firm, or corporation within the limits of the city, there shall be a rate increase of $1.25 to equal the sum of $9.00, effective January 1, 2005. (Ord. 1020 § 2, 2004)

Article III. Prohibited Acts

13.08.120 Drawing water from another's pipes without city permission.

A. A domestic water user shall not permit other user or users of water, whether the same is for domestic or other purposes, to draw or use water through his pipes without having obtained permission from the water superintendent. Any water user who violates the provisions of this subsection shall be guilty of a misdemeanor and the water to his property shall be turned off.

B. Any person who violates any provision of this section shall be guilty of a misdemeanor and upon conviction thereof shall be fined in an amount not to exceed $500.00, or shall be incarcerated for a period of time not to exceed six months, or both such fine and incarceration. (Ord. 571, 1985)

13.08.130 Groundwater well drilling – Prohibited – Statement of policy.[2]

Superseded by Ord. 1139. (Ord. 642 § 1, 1988)

13.08.135 Groundwater well drilling – Prohibited – Penalty.*

Superseded by Ord. 1139. (Ord. 642 §§ 2, 3, 1988)

Article IV. Cross-Connections

13.08.140 Purpose of article.

The control, including elimination, of cross-connections for all new and existing water service customers shall be in accordance with the city of Zillah's cross-connection control manual, attached to the ordinance codified in this article and incorporated in reference herein. In addition, applicable regulations of the Department of Health stated in the State of Washington Administrative Code (WAC 246-290-490) or subsequent revisions shall be complied with. Where, in a specific case, different materials, methods or other requirements apply, the more restrictive shall govern. Where there is a conflict between a general requirement and a specific requirement the specific requirement shall govern. (Ord. 916 § 1, 2000; Ord. 635 § 1, 1988)

13.08.150 Definition of cross-connection.

Any actual or potential physical connection between a public water system and any source of nonpotable liquid, solid or gas that could contaminate the public water supply by backflow. (Ord. 916 § 1, 2000; Ord. 635 § 2, 1988)

13.08.160 Cross-connections prohibited.

It is unlawful for any person to allow any contaminants or pollutants to back feed from their facility and/or property into the city's municipal water distribution system, and shall ensure that there does not exist a cross-connection located within the facility and/or property to which said domestic water service is to be delivered. In making application to receive domestic water service from the city the applicant shall certify that no cross-connection exists or will exist within the facility and/or property to which water service delivery is sought. (Ord. 916 § 1, 2000; Ord. 635 § 3, 1988)

13.08.170 Existing cross-connections.

Should any person have within their facility and/or property an existing cross-connection with the city's domestic water system that cannot reasonably be eliminated a certified and approved backflow prevention device shall be installed at the property owner's expense. (Ord. 916 § 1, 2000; Ord. 635 § 4, 1988)

13.08.180 Duties of public works administrator.

It shall be the duty and responsibility of the public works director for the city to inspect for and regulate the provisions of this article. The public works director shall be responsible to determine circumstances under which existing cross-connections cannot be eliminated, and shall be responsible to ensure that backflow prevention devices are installed to protect the public domestic water system. (Ord. 635 § 5, 1988)

13.08.190 Discovery of hazard – Abatement.

If an immediate hazard to health is suspected by a located cross-connection, the public works supervisor shall take immediate steps to disconnect the public domestic water supply to the premises containing the cross-connection. (Ord. 635 § 6, 1988)

13.08.200 Violation – Penalty.

Violations of or failure to comply with the provisions of this article are declared to be unlawful and are declared to be a misdemeanor. Upon conviction for a violation of this article, a fine in the sum of $500.00, or incarceration of a period of not to exceed 30 days, or both said fine or imprisonment may be imposed. (Ord. 635 § 7, 1988)

[1] Editor's Note: Ord. 256 sets out water system provisions not set out in this code. Rates have been codified as they have been amended regularly. Other water system ordinances not codified are as follows: Ords. 77, 95, 103, 133, 149, 151, 156, 166, 173, 224, 225, 245, 253, 278 and 422.

[2] Editor's note: Ord. 1139 consolidates and amends the provisions of Ords. 642 and 1045. Provisions covering the subject matter previously contained in these sections are now found at ZMC 13.18.065 and 13.18.095.

Chapter 13.18
UTILITY STANDARDS FOR URBAN GROWTH AREAS[1]

Sections:

Article I. Water Service

13.18.010 Statement of purpose.
13.18.020 Water connection application/requirement.
13.18.030 New development and substantial improvements.
13.18.040 Availability of service/deferral of connection.
13.18.050 Service outside city limits.
13.18.060 Surcharge for users outside city limits.
13.18.065 Drilling prohibited – Exceptions.
13.18.070 Irrigation water.
13.18.080 Municipal irrigation water.
13.18.090 Penalty provision.
13.18.095 Unlawful well drilling.
13.18.100 Lien provision.

Article II. Sewer and Garbage

13.18.110 Statement of purpose.
13.18.120 On-site sewage disposal systems.
13.18.130 Connection to public sewer system.
13.18.140 New development and substantial improvements.
13.18.150 Deferral of connection obligation.
13.18.160 Service outside city limits.
13.18.170 Solid waste service.

Article I. Water Service

13.18.010 Statement of purpose.

The city council for the city of Zillah, Washington has determined that it is in the best interest of the citizens and the municipality to establish and develop a uniform source of domestic water supply for its citizens and residents. A public water system has been developed and will continue to be extended to serve the residential needs of its citizens for potable water. It is important to establish the requirements for connection to the public water supply within the designated urban growth area and/or newly annexed properties. It is of further importance that no additional wells be drilled or put to use within the corporate limits. The ordinance codified in

this article amends prior legislative actions with regard to the subject matter as set forth in Ordinances 642 and 1045. (Ord. 1139 § 1, 2007)

13.18.020 Water connection application/requirement.

All structures, facilities and properties utilizing or requiring domestic and/or irrigation waters and located within the municipal boundaries of the city of Zillah shall connect to the public water system upon the failure or replacement of any on-site well; provided, that public water service is available to the property. (Ord. 1139 § 2, 2007)

13.18.030 New development and substantial improvements.

A property, structure or facility shall be required to connect to the public water system as a condition to any proposed development or material change in usage or occupancy of the subject property. Any development, project proposal or material alteration of use is expressly conditioned upon property owner extending at its sole cost and expense public water service to the subject development and/or property. The city may, however, waive the connection requirement in the event that the cost of line extension is more than twice the cost of an approved on-site system. (Ord. 1139 § 3, 2007)

13.18.040 Availability of service/deferral of connection.

Public water service shall be deemed available to a structure, facility or property when such service is located at any point within 300 feet of the property perimeter boundary. The city of Zillah may defer connections to the public water system in the event that (A) the existing well or water supply is adequate for intended purposes and does not present an issue with regard to public health, safety or welfare, or (B) the structure, facility or property being served is not within 300 feet of the public water service line and connection would be uneconomic (as based on consideration of well installation and associated cost) or otherwise infeasible or unduly burdensome under circumstances applicable to proposed use, location or other factor determined reasonable under circumstances. Any person requesting deferral shall make such request in writing with cost information and/or estimates, description and documentation to establish infeasibility or undue burden, and such other material as may be reasonably required with regard to evaluation of the deferral request. Any request for deferral shall be submitted to city council for final determination; provided, however, that a deferral request may be combined with any contemporaneous or related land use application. (Ord. 1139 § 4, 2007)

13.18.050 Service outside city limits.

The city of Zillah may further provide public water service to structures, facilities and properties outside the municipal boundaries but within the designated urban growth area (UGA). Any area

served must be within the established boundaries established for such service and the designated urban growth area (UGA). An extension of public water lines to unincorporated areas shall be at the sole cost and expense of the property owner with system improvements reviewed and approved by the director of public works and city engineer. City may require execution of an outside utility agreement (OUA) as a condition to line extension. (Ord. 1139 § 5, 2007)

13.18.060 Surcharge for users outside city limits.

The charges for all entities outside the corporate limits of the city of Zillah, shall be charged the sum of $3.25 in excess of all corresponding rate charges inside the corporate limits of said city. (Ord. 1139 § 6, 2007)

13.18.065 Drilling prohibited – Exceptions.

It is unlawful for any person, firm or entity to drill a domestic, irrigation or other ground water well within the limits of the city of Zillah, Washington, except where public water service is not available to the property (as set forth in ZMC 13.18.040) or the city has authorized a deferral in connection with the public water service. Well drilling shall be authorized only for the purpose of replacing a failed on-site well where public water service is not available or for deferral authorized by municipality. (Ord. 1139 § 7, 2007)

13.18.070 Irrigation water.

All separate meters for irrigation water from domestic water shall be charged at the rate of $10.00 per 1,000 cubic feet or any portion thereof. (Ord. 1139 § 8, 2007)

13.18.080 Municipal irrigation water.

All separate meters for irrigation water from domestic water for municipal use shall be charged at the rate of $5.00 per 1,000 cubic feet or any portion thereof. (Ord. 1139 § 9, 2007)

13.18.090 Penalty provision.

A penalty of $10.00 shall be levied in the event that the said charges are not paid by the fifteenth of the month the bill is mailed. Nothing shall be credited or taken away from bills paid before the fifteenth of said month. (Ord. 1139 § 10, 2007)

13.18.095 Unlawful well drilling.

Any person, firm, or entity which shall violate the provisions prohibiting unauthorized well drilling shall be guilty of a misdemeanor, and upon conviction of, may be fined an amount up to $1,000. In addition to criminal penalties, the city attorney, on behalf of the city, is authorized to seek to enjoin or restrain violations of this chapter, in addition to statutory costs of suit, should

the city obtain an injunction or restraining order against a person or entity violating the terms of this chapter. Said person or entity shall be further liable for reasonable attorney's fees and costs incurred in said civil action. (Ord. 1139 § 11, 2007)

13.18.100 Lien provision.

In the event said bill is delinquent for over three months, a lien shall be placed upon the property owner for said amount of delinquent charges and said service shall be disconnected until paid in full. (Ord. 1139 § 12, 2007)

Article II. Sewer and Garbage

13.18.110 Statement of purpose.

City council for the city of Zillah, Washington, has determined that it is important to establish requirements for residents requesting or obtaining public sewer and garbage services for properties located within the designated urban growth area and/or newly annexed properties. It is further recognized that on-site sewage disposal should be limited and discouraged and, except where specifically authorized by permit, prohibited in all urban areas and that all sewage should be discharged to the public wastewater system. (Ord. 1046 § 1, 2005)

13.18.120 On-site sewage disposal systems.

No on-site sewage disposal system may be constructed, used, or maintained in the city of Zillah without a written permit from the health officer certifying that it meets the requirements of the Health District. On-site sewage disposal systems must also meet the requirements of the public works director and city engineer. It is recognized, however, that existing permitted systems will be allowed to continue upon annexation in accordance with the provisions of this code. (Ord. 1046 § 2, 2005)

13.18.130 Connection to public sewer system.

All structures and land uses which contain facilities for the disposal of sewage shall connect to the public sewer system at such time as there is a failure of the on-site system; provided, that public sewer service is available to the property. The wastewater system is available to serve a property when such service is located in a street, highway, alley or easement located within 300 feet from the perimeter boundaries of the subject property. The property must also be included in the design area for the public sewer. (Ord. 1046 § 3, 2005)

13.18.140 New development and substantial improvements.

A property and structure shall be required to connect to the public sewer system as a condition to any proposed development or material change in usage or occupancy of the subject

property. Any development, project proposal or material alteration of use is expressly conditioned upon property owner extending at its sole cost and expense public sewer service to the subject development and/or property. City may, however, waive or defer the connection requirement as provided herein. (Ord. 1046 § 4, 2005)

13.18.150 Deferral of connection obligation.

City may defer connection to the public sewer system for any property or new development.

Deferral of connection is authorized in the following instances: (A) an existing on-site sewage disposal system is adequate for intended purposes and does not present an issue with regard to public health, safety or welfare; or (B) the structure, use or facility to be served is not within 300 feet of the public sewer line and connection would be economically infeasible or practically uneconomical under circumstances applicable to proposed use, location or other factor determined reasonable under circumstances. Any person requesting deferral shall make such request in writing with reasonable and appropriate supporting documentation. Any request for deferral shall be submitted to city council for final determination. (Ord. 1046 § 5, 2005)

13.18.160 Service outside city limits.

City of Zillah may further provide public sewer service to structures, facilities and properties outside the municipal boundaries but within the designated urban growth area (UGA). Any area served must be within the established boundaries established for such service and the designated urban growth area (UGA). An extension of public sewer lines to unincorporated areas shall be at the sole cost and expense of the property owner with system improvements reviewed and approved by the director of public works and city engineer. City may require execution of an outside utility agreement (OUA) as a condition to line extension. (Ord. 1046 § 6, 2005)

13.18.170 Solid waste service.

All structures, facilities and properties located within the municipal boundaries of the city of Zillah shall be served by public garbage service. (Ord. 1046 § 7, 2005)

---

[1] Prior legislation: Ords. 642 and 1045.

Chapter 13.28
REDUCTION IN WATER BILLINGS DUE TO LEAKS

Sections:

13.28.010 Purpose.
13.28.020 Procedure to reduce water billings.
13.28.030 City responsibility.
13.28.040 Appeals to city council.

13.28.010 Purpose.

The purpose of this chapter is to provide a policy and procedure for the reduction and abatement of water billings to persons or businesses receiving city water services within the city of Zillah. The city council is of the view that under certain circumstances, the charges reflected by meter readings should be reduced for a break or leak in water lines which existed, and was repaired. This chapter shall set forth the city's policy and procedure for determining the reduction in the water billings. (Ord. 708 § 1, 1991)

13.28.020 Procedure to reduce water billings.

In order for a city water user to make application for a reduction or abatement of a city water bill, the applicant must establish the following factors:

A. That during any given billing period, the amount of water for which user was billed was double the average use during a comparable billing period.

B. That the increased water usage was due to a break or leak in the water lines which break or leak has been fixed or remedied.

When any user of city water establishes said factors, the city clerk/treasurer shall be authorized to reduce and abate the water bill in question to an amount equivalent to 50 percent of the charges for water usage which exceed an amount considered to be normal water usage. (Ord. 708 § 2, 1991)

13.28.030 City responsibility.

Should a water user establish by competent proof that any increased water usage was due to the fault of the city or due to the failure of pipes or other water facilities for which the city is responsible, the entire amount of charges exceeding charges for the average or normal amount of water consumption as established by consumption during comparable periods of time shall be abated. (Ord. 708 § 3, 1991)

13.28.040 Appeals to city council.

Should any water user make a presentation to the city clerk/treasurer pursuant to the provisions of this chapter seeking a reduction or abatement of water charges, and should any such user be dissatisfied with the decision of the city clerk/treasurer, the matter may be appealed to the city council for consideration at the next regularly scheduled meeting of the city council. The city council shall hear from the water user and the clerk/treasurer and shall render a decision after consideration. The decision of the city council shall be final subject only to review under the provisions of the Washington Administrative Act, RCW Title 34. (Ord. 708 § 4, 1991)

Chapter 13.30
UTILITY REIMBURSEMENT AGREEMENTS

Sections:

13.30.010 Purpose.
13.30.020 Definitions.
13.30.030 Minimum project size.
13.30.040 Length of reimbursement provision.
13.30.050 Application.
13.30.060 Determination of reimbursement area boundary and reimbursement fee.
13.30.070 Written agreement – Payment of city costs in excess of application fee city council approval.
13.30.080 Reimbursement agreement must be recorded.
13.30.090 Construction and acceptance of improvements – Recording of final fees.
13.30.100 Collection of reimbursement fees – No liability for failure to collect.
13.30.110 Segregation of reimbursement fees.
13.30.120 Disposition of undeliverable reimbursement fees.
13.30.130 Failure to comply with this chapter.
13.30.140 Existing facilities with reimbursement agreement pending.

13.30.010 Purpose.

The purpose of this chapter is to prescribe rules and regulations for exercise of the authority to enter into a utility reimbursement agreement granted to the city by Chapter 35.91 RCW. (Ord. 913 § 2, 2000)

13.30.020 Definitions.

As used in this chapter, the terms listed below shall be defined as follows:

“Administrator” means the public works director or his/her designated representative.

“Cost of construction” means those costs (excluding interest charges or other financing costs) incurred for design, acquisition for right-of-way and or easements, construction, materials and installation required to create an improvement which complies with city standards.

“Direct benefit area” generally means property or properties that lay within 200 feet of the utility improvement seeking reimbursement. The administrator may modify the direct benefit area boundary if the criterion in ZMC 13.30.060(B)(1) is met.

“Indirect benefit area” generally means property or properties that lay beyond 200 feet but within 500 feet of the utility improvement seeking reimbursement.

"Reimbursement agreement" means a written contract between the city and one or more parties providing both for construction of sewer or water facilities and for reimbursement to the party or parties constructing the facilities for part of the costs of the facilities by owners of property benefited by the improvements.

"Sewer or water facilities" has the meaning specified in RCW 35.91.020 as it now reads, or as hereafter amended. The word utility shall have the identical meaning within this chapter as sewer or water facilities. (Ord. 913 § 2, 2000)

13.30.030 Minimum project size.

To be eligible for a reimbursement agreement, the estimated cost of the proposed improvement must be not less than $5,000. The estimated costs of the improvement shall be determined by the administrator, based upon a construction contract for the project, bids, engineering or architectural estimates or other information deemed by the administrator to be a reliable basis for estimating costs. (Ord. 913 § 2, 2000)

13.30.040 Length of reimbursement provision.

All reimbursement agreements shall provide for reimbursement for a period not to exceed 15 years from the date of final acceptance of the improvements by the city. The city council has the sole discretion to shorten the length of time of a reimbursement agreement prior to final city council decision. (Ord. 913 § 2, 2000)

13.30.050 Application.

A. An application for a reimbursement agreement shall be made on a form provided by the city. An application fee of $250.00 shall be submitted to the city with the written application and shall be accompanied by:

1. Preliminary utility design drawings;

2. Itemized estimate of construction costs prepared and signed by a licensed civil engineer or in the form of a bid submitted by a qualified contractor. If more than one bid has been obtained, all bids must be submitted to the city;

3. A scaled vicinity drawing, stamped by a licensed civil engineer or licensed land surveyor depicting the proposed improvements, the location, the proposed benefited area, dimensions and county assessor's numbers for each tax parcel, size of parcels, and evaluations where necessary for determining benefits. The applicant has the right to exclude or remove certain properties within the proposed benefit area but will not be

allowed to include the additional costs of such exclusions onto others properties within the proposed benefit area; and

4. A separate legal description for each tax parcel within the benefited area; and

5. Such other information as the administrator determines is necessary to properly review the application.

B. The administrator shall review all applications and shall approve the application for completeness only if the following requirements are met:

1. All information contained above is submitted; and

2. The project satisfies the minimum size requirement in ZMC 13.30.030 and complies with city sewer or water standards; and

3. The proposed improvements fall within the description of water or sewer main line facility as those terms described in Chapter 35.91 RCW and city utility standards; and

4. The proposed improvements are not constructed or currently under construction. (Ord. 913 § 2, 2000)

13.30.060 Determination of reimbursement area boundary and reimbursement fee.

The administrator shall prepare a written determination for each completed reimbursement agreement application. Until the city council determines a standard calculation methodology for reimbursement agreements, the administrator shall calculate reimbursement agreement areas by one of the two following methods of calculation:

A. Using an approved calculation method approved by the city's water and sewer engineer that is in accordance with the city's utility design standards.

B. Using a pro-rata share utility improvement method to include the following calculation considerations:

1. Direct or indirect benefit to surrounding properties, which parcels did not contribute to the original cost of the improvement, elevation and topology of the area, logical service area, city utility design standards, and future utility plans in the surrounding area. If both direct and indirect benefits are calculated the direct benefit area shall have at least a two to one weight ratio in the final reimbursement cost calculation. The administrator shall have the option to define a complete property lying partially, but not wholly, within 200 feet of the utility improvement as a direct benefit area if the written findings in this section can

show justification. At no time can a property lying wholly outside 200 feet of the utility improvement be defined as a direct benefit area.

2. Determining the pro-rata share of the utility improvement cost shall include eligible reimbursement costs that are evenly distributed on a square foot, front foot, or combination of square/front foot calculation. The administrator will remove any properties that the applicant has requested in writing to be removed from consideration from the reimbursement area. If the applicant has requested specific properties to be removed from the reimbursement area the costs that would have been associated with the removed properties shall not be redistributed to other properties in the reimbursement area.

C. A copy of the administrators' reimbursement determination shall be mailed to the applicant at the address listed on the application for review, approval, and signature. (Ord. 913 § 2, 2000)

13.30.070 Written agreement – Payment of city costs in excess of application fee city council approval.

A. Upon the applicant's approval of the administrator's determination of a reimbursement agreement that include the estimated costs of construction, the reimbursement benefit area, legal descriptions, and estimated fees to be reimbursed the applicant shall sign a reimbursement agreement in the form supplied by the city and return it to the city.

B. The signed agreement, the application and supporting documents, together with the estimate of cost of construction, determination of reimbursement area and estimated fees shall be presented to the city council with a request that the city council authorize the mayor to sign the reimbursement agreement on behalf of the city.

C. In the event costs incurred by the city for engineering or other professional consultant services required in processing the application exceed the amount of the application fee, the administrator shall so advise the city council and the reimbursement agreement approval may be conditioned upon receipt of payment by the applicant of an additional amount sufficient to compensate the city for its actual costs in excess of the application fee. (Ord. 913 § 2, 2000)

13.30.080 Reimbursement agreement must be recorded.

A. In order to become effective, a reimbursement agreement must be recorded with the Yakima County auditor within 30 days of approval by the city. It shall be the sole responsibility of the applicant to record the reimbursement agreement.

B. Within 30 days after receipt of evidence that the reimbursement agreement has been recorded the administrator shall record a notice of additional tap or connection charges with the Yakima County auditor's office as required by RCW 65.08.170. (Ord. 913 § 2, 2000)

13.30.090 Construction and acceptance of improvements – Recording of final fees.

A. After the reimbursement agreement has been signed by both parties, and all necessary permits and approvals have been obtained, the applicant shall construct the improvements, and upon completion, request final inspection and acceptance of the improvements by the city, subject to any required obligation to repair defects. An appropriate bill of sale, easement and any other document needed to convey the improvements to the city and to ensure right-of-access for maintenance and replacement shall be provided, along with documentation of the actual costs of the improvements and a certification by the applicant that all of such costs have been paid.

B. The applicant shall submit final costs of the utility improvement used for the reimbursement agreement. In the event that actual costs have a greater than 10 percent difference, either more than or less than the estimate, then the estimate used in calculating the reimbursement agreement fees shall be recalculated by the administrator, reducing or increasing them accordingly, and shall cause the reimbursement agreement to be rerecorded with the county auditor. If the final utility costs are within 10 percent of the estimate used in ZMC 13.30.060 to determine the reimbursement agreement fees, the estimate shall stand and no recalculation of the fees shall occur.

C. The reimbursement agreement shall be considered nonenforceable until the items mentioned in subsections (A) and (B) of this section have been submitted to the city. (Ord. 913 § 2, 2000)

13.30.100 Collection of reimbursement fees – No liability for failure to collect.

A. Subsequent to the recording of a reimbursement agreement, the city shall not permit connection of any property within the reimbursement area to any sewer or water facility constructed pursuant to the reimbursement agreement, unless the share of the costs of such facilities required by the recorded agreement is first paid to the city.

B. Upon receipt of any reimbursement fees, the city shall deduct a five percent administrative fee and remit the balance of the reimbursement fees to the party entitled to the fees pursuant to the agreement. In the event that through error, the city fails to collect a required reimbursement fee prior to approval of connection to a sewer or water facility, the city shall make diligent efforts to collect such fee, but shall under no circumstances be obligated to

make payment to the party entitled to reimbursement, or in any other way be liable to such party, unless such reimbursement fee has actually been paid to the city. (Ord. 913 § 2, 2000)

13.30.110 Segregation of reimbursement fees.

The reimbursement agreement shall provide that the city is authorized to make segregation or adjustments to reimbursement fees because of subdivision or boundary line adjustment of the benefited properties. The segregation or adjustment shall generally be made in accordance with the method used to establish the original reimbursement fees to be paid. (Ord. 913 § 2, 2000)

13.30.120 Disposition of undeliverable reimbursement fees.

In the event that, after reasonable effort, the party to which reimbursement fees are to be paid pursuant to a reimbursement agreement cannot be located, and upon the expiration of 180 days from the date fees were collected by the city, the fees shall become the property for the city and shall be revenue to the city sewer and water utility. (Ord. 913 § 2, 2000)

13.30.130 Failure to comply with this chapter.

No reimbursement cost or fee shall be collected, nor shall any person be obligated to pay a reimbursement cost or fee with respect to any sewer or water facilities constructed after the adoption of this chapter, unless there has been full compliance with this chapter. (Ord. 913 § 2, 2000)

13.30.140 Existing facilities with reimbursement agreement pending.

Water and sewer facilities constructed prior to the adoption of this chapter for which reimbursement costs may be pending by agreement or otherwise shall be governed by the agreement to be negotiated and not by the requirements of this chapter. (Ord. 913 § 2, 2000)

Chapter 13.34
UTILITY TAX DISCOUNT

Sections:

13.34.010 Program for discounts established.
13.34.020 Low-income senior citizen qualifications.
13.34.030 Disabled citizen qualifications.
13.34.040 Application.
13.34.050 Discount rate.
13.34.060 Procedure.
13.34.070 False/incorrect information.

13.34.010 Program for discounts established.

City council for the city of Zillah, Washington, has determined that it is in the best interest of the city to establish discounts for residential utility services, water, sewer and garbage to low-income senior citizens and qualified disabled citizens in order to provide necessary support for the disadvantaged. Such reductions are intended to offset rate increases and relate to the applicable utility tax rate. The city clerk/treasurer is authorized and directed to administer said program and may establish administrative regulations and procedures to carry out the intent and purpose of the ordinance codified in this chapter. (Ord. 1247 § 2, 2010; Ord. 1024 § 1, 2004)

13.34.020 Low-income senior citizen qualifications.

To implement the program provided, a low-income senior citizen shall provide to the city clerk/treasurer satisfactory proof of the following in order to qualify for the utility tax discount:

A. Is 65 years of age or older; and

B. Has a maximum annual household income at or below 125 percent of federal poverty guidelines; and

C. Is a single occupant or the head of a household or the spouse of the head of the household; and

D. Resides in the dwelling unit served by the solid waste, sewer, and water utility; and

E. Is billed or is the spouse of a person billed by the garbage, sewer and water utility.

Applicants shall verify such information and shall provide such other data as is deemed appropriate upon forms prepared and in the manner determined by the city. (Ord. 1247 § 3,

2010; Ord. 1024 § 2, 2004)

13.34.030 Disabled citizen qualifications.

To implement the program provided, a disabled citizen shall provide to the city clerk/treasurer satisfactory proof of the following in order to qualify for the utility tax discount:

A. Is disabled; and

B. Has a maximum annual household income at or below 125 percent of federal poverty guidelines; and

C. Is a single occupant or the head of a household or the spouse of the head of the household; and

D. Resides in the dwelling unit served by the solid waste, sewer and water utility; and

E. Is billed or is the spouse of a person billed by the garbage, sewer and water utility.

Applicants shall verify such information and shall provide such other data as is deemed appropriate upon forms prepared and in the manner determined by the city. (Ord. 1247 § 4, 2010; Ord. 1024 § 3, 2004)

13.34.040 Application.

Discount applies to the utility tax rate applicable to residential water, sewer and garbage utility services. Persons qualified by the city as eligible recipients of a low-income senior citizen discount or disabled citizen discount provided for in this chapter shall be charged a discounted utility tax rate for charges assessed for residential water, sewer and garbage utility services. Such discount shall be applicable for the first month following submission of a complete application and city approval of the application. (Ord. 1247 § 5, 2010; Ord. 1024 § 4, 2004)

13.34.050 Discount rate.

The city clerk/treasurer is authorized to reduce the applicable utility tax rate on charges for residential water, sewer and garbage utility services to qualified low-income senior citizens or qualified disabled citizens from 32 percent to seven percent. (Ord. 1247 § 6, 2010; Ord. 1088 § 2, 2006; Ord. 1024 § 5, 2004)

13.34.060 Procedure.

All persons claiming the discount provided for in this chapter shall first be required to file an application at City Hall in Zillah to initiate the reduction. The application shall be on forms prescribed by the city clerk/treasurer and shall provide information by which the city

clerk/treasurer may verify the applicant's eligibility to participate. Applicants shall be required to submit such additional information as may be required by the city clerk/treasurer to verify eligibility. In order to remain eligible for the program, an applicant must verify to the city that they are still eligible and reapply for the discount every 12 months by filing a new application. If the city determines that the applicant is ineligible for the reduction, the applicant will be notified by the city. If the applicant moves from the residence to which the service is provided or otherwise becomes ineligible for the reduced rate, the applicant shall be required to notify Zillah City Hall immediately and the applicable discount rate shall be terminated. (Ord. 1247 § 7, 2010; Ord. 1024 § 6, 2004)

13.34.070 False/incorrect information.

If false, incorrect or misleading information is submitted to the city in connection with any application for a reduced utility tax rate, the applicant will automatically become ineligible to receive any future discounts and any discounts or reductions already given shall be fully repaid to the city, together with a penalty in the amount of 100 percent of the repayment amount. This remedy shall be in addition to any other remedies the city may have for the provision of false, incorrect or misleading information. (Ord. 1247 § 8, 2010; Ord. 1024 § 7, 2004)

Chapter 13.38
INFRASTRUCTURE IMPROVEMENT PROGRAM

Sections:

13.38.010 Purpose of chapter.
13.38.020 Establishment of Zillah infrastructure improvement program.
13.38.030 Use of development fees.
13.38.040 Applicability.
13.38.050 Exemptions and credits.
13.38.060 Segregation of development fees from general fund.
13.38.070 Appeals.
13.38.080 Refund of development fees.
13.38.090 Mandatory review.

13.38.010 Purpose of chapter.

The city council for the city of Zillah, Washington, has studied the impact of development within the city of Zillah, Washington. The city of Zillah finds that construction and development of dwelling units, commercial, industrial manufacturing buildings and structures (referred to herein as “development”) places demands on municipal government to provide new services and expand and improve public facilities. In order to provide an equitable source of funding for public facilities, it is necessary for the city of Zillah to establish a city of Zillah infrastructure improvement program which charges a proportionate share of the costs of new services and facility improvements to those projects and improvements creating the demand for additional services and improvements. (Ord. 1251 § 1, 2011)

13.38.020 Establishment of Zillah infrastructure improvement program.

A. The city of Zillah hereby establishes the Zillah infrastructure improvement program (“program”) for partial financing of identified public facility and system improvements. System improvements and public facilities included in the program are:

1. Publicly owned parks, open space and recreational areas;

2. Public streets and roads; and

3. Fire protection facilities.

B. Development fees will be assessed and collected at time of building permit issuance and based on the gross square footage of the building or improvement. All development fees collected through the Zillah infrastructure improvement program will be allotted among the three areas as follows:

1. Parks and open space will receive 15 percent;

2. Streets and roads will receive 60 percent; and

3. Fire protection will receive 25 percent of the total amount collected.

C. The program may identify system improvements to be financed, the anticipated schedule of construction, and the characteristics of new development as shown in the following attachments to the ordinance codified in this chapter:

1. Attachment A, General parks and open space plan, or as amended.

2. Attachment B, Streets/road plan including most recently adopted six-year STIP.

3. Attachment C, Fire improvement plan, or as amended. (Ord. 1251 § 2, 2011)

13.38.030 Use of development fees.

A. Development fees may only be used for financing system improvements identified in the Zillah infrastructure improvement program. Funding of system improvements shall be balanced with development fees and other sources of public funds. Costs of system improvements may not rely solely on development fees.

B. Development fees may not be used for:

1. Operations and maintenance. Development fees may not be used to pay salaries or to pay for regular maintenance or simple replacement of existing equipment;

2. Facilities not needed to serve new development or which do not benefit new development. Development fees may be applied only to new facilities needed to serve new growth and development. There shall be a reasonable connection between the anticipated need for additional facilities with such fees representing a proportionate share of system costs with due consideration given to the cost of facilities funding sources, and availability and methods of other public financing.

C. Development fees may be utilized for municipal improvements, including, but not limited to, facility planning, land acquisition, site improvements, necessary off-site improvements, construction, engineering, architectural, permitting, financing, and administrative expenses, facility construction and improvements, and other costs reasonably associated with such system improvements.

D. The city council shall, by motion or resolution, budget and approve application of development fees to system improvements. (Ord. 1251 § 3, 2011)

13.38.040 Applicability.

A. The building official shall assess an applicant for a building permit a development fee at the established rate determined at time of complete application and based on calculated square footage of building structure or improvement. The total development fee shall be paid separately from any other fees and shall be paid prior to the issuance of a building permit.

B. The city council shall establish the development fee schedule and shall review and revise, if necessary, periodically to reflect changes in planned improvements, current budget levels, and compliance to the city of Zillah comprehensive plan and the city's capital improvement plan. Prior to the establishment or revision of the development fee schedule, the city council shall hold a public hearing on the proposed fees.

C. The development fee schedule is as follows or herein amended for the following uses:

Residential	$0.65/sq. ft.
Commercial	$0.65/sq. ft.
Light Manufacturing	$0.65/sq. ft.

D. The calculation of the development fee is premised upon anticipated costs of system improvements, proportionate impact of new development, the cost of existing public facility improvements and other available means and methods of public financing. The amount of the development fee shall be reasonably related to the development's share of the cost of the facilities improvements made necessary by the development or if the improvements were previously constructed at municipal expense prior to the development. (Ord. 1251 § 4, 2011)

13.38.050 Exemptions and credits.

A. The following shall be exempt from payment of development fees:

1. Replacement to a similar intensity of a residential structure or mobile home having been actively occupied for the three previous years with a new residential structure or manufactured home at the same site or lot when such replacement occurs within 12 months of the demolition or destruction of the prior structure or the removal of the mobile/manufactured home;

2. Minor alterations, expansion, enlargement, remodeling or rehabilitation or conversion of an existing dwelling unit or units where no additional units are created and the use is not

changed;

3. The construction of accessory structures to a residential use that will not create additional impacts on public facilities;

4. Miscellaneous improvements, including, but not limited to, fences, walls, swimming pools, and signs;

5. Demolition or removal of a structure.

B. A credit for the value of any off-site dedication of land for, improvement to, or new construction of a system improvement, provided by a developer, that is required as a condition of approval of a development activity and where a developer and the city have entered into a voluntary agreement pursuant to RCW 82.02.020, which provides for the credit against the development. The right and extent of such credit shall be established solely by the city after consideration of relevant factors including, but not limited to, type of improvement, proportionate share, amount and nexus with the project.

No credit shall be allowed if the voluntary agreement, SEPA mitigation condition, or land division or project condition requires the payment of development fees. Additionally, no credit shall be allowed until the developer has provided the city with documentation demonstrating compliance with the terms of the voluntary agreement, SEPA mitigation condition, or land division project condition.

C. The mayor or his designee(s) shall be authorized to determine whether a particular development activity falls within an identified exemption or is eligible for a credit against the development fees. Determinations of the city shall be in writing and shall be subject to appeal procedures set forth herein. (Ord. 1251 § 5, 2011)

13.38.060 Segregation of development fees from general fund.

A. The building official shall record the name of the individual paying the development fee, the assessor’s map and lot number(s) of the property for which the development fee is being paid, the amount of the fee paid for each facility for which fees are collected, and the date the development fee was paid on forms provided by the finance department.

B. Upon collection of the development fee, the clerk/treasurer shall transfer the funds into special interest-bearing account(s) dedicated for funding the improvements for which the fee is collected.

C. An annual report of each development fee account shall be prepared which shows (1) the

source and amount of fees collected, earned or received, and (2) system improvements that were financed in part by development fees. (Ord. 1251 § 6, 2011)

13.38.070 Appeals.

A. Any developer or property owner may pay development fees imposed under protest in order to obtain a project development approval. An appeal is authorized with regard to the imposition of development fees on any development activity, but no appeal shall be permitted unless and until the development fees have been paid under protest.

B. A municipal determination with respect to the applicability of development fees to a given development activity and/or building permit, the availability and/or extent of any exemption, the calculation of applicable development fee, or any other determination with respect to a development fee may be appealed to the city council. An appeal shall include applicable appeal fees established by the municipality.

C. The determination of a municipal official making the determination on the applicable development fee is entitled to substantial weight and the city council may approve, reject or modify such determination on appeal. (Ord. 1251 § 7, 2011)

13.38.080 Refund of development fees.

The city shall refund such development fees that have not been spent or encumbered within six years of the date on which such fees were paid. Such fees may be retained in the event of extraordinary or compelling reasons determined by the city council. Unexpended or unencumbered fees shall be returned to the owner of record at the time a refund is warranted. (Ord. 1251 § 8, 2011)

13.38.090 Mandatory review.

The city council for the city of Zillah, Washington, shall be responsible to review the provisions of this chapter at least once every two years. The mitigation of the environmental impacts that this chapter is designed to accomplish requires constant review and study. The need for adequate facilities will continue to become more acute and more costly as development continues to occur. Accordingly, the cost of mitigating environmental impacts may increase and must be reviewed in order that the city of Zillah is utilizing its best efforts to address these issues and concerns. (Ord. 1251 § 9, 2011)

EXTENSION BY DEVELOPERS POLICY

EXTENSION BY DEVELOPERS

If a developer, or other person desires to extend the water system, they must do so at their own expense, provided they comply with the standards and other requirements of the City.

1. At the time that the preliminary proposal is submitted to the City, a letter requesting the availability of water should be submitted to the City for approval. A map showing the area to be served, the number of units, and the type of units should accompany this request.

2. If the area to be served is inside the service area but outside the City Limits, and Outside Utility Service Agreement must be executed.

3. Prior to the installation of water mains, an application to extend the water system must be submitted by the Developer for approval by the City. At this time, the Developer should authorize his consulting engineer to proceed with design and furnish the City three copies of the preliminary drawings. After review and approval by all applicable agencies, the Developer's consulting engineer must provide four copies of the final water system extension design to the City.

4. After the plans are complete, the developer may call for bids for the work described herein. It is required that the Developer secure a Performance Bond guaranteeing the completion of this work and payment of bills and guarantee the materials and workmanship for one year. It is required that licensed and bonded contractors be employed by the Developer.

5. After the award of the Contract and before proceeding with any work on the job, the City must be notified at least five working days in advance of start of work. Any work that is performed without proper notification of the City will be summarily rejected.

6. During the progress of the work, the City should be kept informed and inspection requested prior to covering pipe and other major phases of construction.

7. After completion of construction, the standard pressure test must be performed.

8. After the pressure test, lines must be tested and approved for purity. The procedure used for disinfection shall conform to the most current edition of the Standard Specifications for Road, Bridge, and Municipal Construction or other standards acceptable to the Washington State Department of Health. In cases of new construction, drinking water shall not be furnished to the consumer until satisfactory bacteriological samples have been analyzed by a laboratory certified by the State.

9. All fees must be paid prior to ordering meters. This includes cut-in fees, engineering fees, and connection charges that might be applicable to this development.

10. At this point, the Developer and the Contractor should ask for an inspection and acceptance of the mains. This inspection must be performed by the City, Contractor, and the Developer.

11. The developer must furnish the City with a cost breakdown showing the total cost of construction for this development.

12. The Developer must furnish the City permanent easements that might be necessary or applicable to this installation.

13. The Developer must furnish to the City a Maintenance Bond guaranteeing materials and workmanship for a period of one year. This Bond can be a part of the Performance Bond.

14. At this time of development, the Developer may order meters. Any areas where excessive pressure exists (in excess of 90 pounds per square inch), the Developer is responsible for the installation of pressure reducing valves.

15. After acceptance of the water mains by the City, the Developer must sign a Bill of Sale deeding these mains to the City. The Conditions and Standards, which correspond to the Specifications, on all Developer's jobs are on file with the

City. It is the responsibility of the Developer and his Contractor to familiarize themselves with the Specifications prior to starting work. On all construction work, the Developer is responsible to the City for performance of all required work and the Developer will be responsible for directing his Contractor. Nothing contained herein or advice given by the project inspector shall relieve the Developer from his responsibility for conformance with the approved plans and specifications or the City's Construction Standards.

WATER RIGHTS – RAINIER WELL

CERTIFICATE RECORD NO. 7 PAGE NO. 3350-A

STATE OF WASHINGTON, COUNTY OF Yakima

Certificate of Ground Water Right

Issued in accordance with the provisions of Chapter 263, Laws of Washington for 1945, and amendments thereto, and the rules and regulations of the State Supervisor of Water Resources thereunder.

THIS IS TO CERTIFY That THE TOWN OF ZILLAH, WASHINGTON, ..., has made proof ~~of~~ to the satisfaction of the State Supervisor of Water Resources of Washington, of a right to the use of the ground waters of a well located within the NE¼NW¼NE¼ Sec. 36, Twp. 11 N., R. 20 E.W. M., for the purpose of municipal supply under and subject to provisions contained in Ground Water Permit No. 4[illegible]5 issued by the State Supervisor of Water Resources and that said right to the use of said ground waters has been perfected in accordance with the laws of Washington, and is hereby confirmed by the State Supervisor of Water Resources of Washington and entered of record in Volume 7 at page 3350-A; that the right hereby confirmed dates from July 9, 1958; that the quantity of ground water under the right hereby confirmed for the purposes aforesaid, is limited to an amount actually beneficially used for said purposes, and shall not exceed 550 gallons per minute; 296 acre-feet per year for municipal supply.

A description of the lands to which such ground water right is appurtenant, and the place where such water is put to beneficial use, is as follows:

Town of Zillah, Yakima County, Washington.

The right to the use of the ground water aforesaid hereby confirmed is restricted to the lands or place of use herein described, except as provided in Sections 6 and 7, Chapter 122, Laws of 1929.

WITNESS the seal and signature of the State Supervisor of Water Resources affixed this 21st day of May, 1959.

State Supervisor of Water Resources.

ENGINEERING DATA

Jim Daley, Town Clerk [redacted]

Progress Sheet—Ground Water Application

NAME Town of Zillah, Wash. Assigned to 4775

G. W. APPLI. NO. 4912 PERMIT NO CERT. NO. 3350 A

AMENDED CANCELLED

Application received 7-9-58 Initial $10.00 fee received 7-9-58

Statement of additional examination fee $ Sent Received

Application returned for completion or correction Received

Issued

TEMPORARY PERMIT: Approved by

PUBLICATION: O.K.'d by JL Date 9-1-58 Notice sent 8-4-58

Protests

Filed

Affidavit received and checked 9-5-58 Time expired 9-15-58

Amended notice sent: Affidavit received

Time expires

DEPT. OF GAME REPORT

EXAMINATION Made 10-22-58 by JL

O.K.'d for permit by [illegible]

Statement of permit fee sent 3-4-59 Amount $ 20.00 Received 4-8-59

PERMIT NO 4775 ISSUED 4-17-59

BEGINNING OF CONSTRUCTION: Notice sent started Filed

Extension fee $ Extended to

Extended to

Filed 6-15-59

WELL DRILLER'S REPORT: Sent

COMPLETION OF CONSTRUCTION: Notice sent 4-27-59 Filed 4-28-59

$2.00 extension fee Extended to

To

PROOF OF APPROPRIATION: Sent 4-30-59 Filed 5-8-59

$2.00 extension fee Extended to

Statement of certificate fee sent 4-30-59 $ 3.00 Received 5-8-59

CERTIFICATE OF GROUND WATER RIGHT NO. 3350 A ISSUED 5-21-59

STATE OF WASHINGTON

Department of Conservation

EARL COE, DIRECTOR

335 GENERAL ADMINISTRATION BUILDING

OLYMPIA

ALBERT D. ROSELLINI
GOVERNOR

May 21, 1959

DIVISIONS:
RECLAMATION
FLOOD CONTROL
WATER RESOURCES
MINES AND GEOLOGY
COLUMBIA BASIN PROJECT
POWER RESOURCES
WEATHER MODIFICATION

Auditor of Yakima County
Yakima, Washington

Dear Sir:

Enclosed is Certificate of Water Right No 3350-A and a check or money order in the amount of $1.25 to cover the cost of recording in your office.

When this has been done, please forward the certificate to:

Jim Daley, Town Clerk
Zillah, Washington

Very truly yours,

DEPARTMENT OF CONSERVATION

EARL COE, DIRECTOR

M. G. Walker

M. G. WALKER, Supervisor
Division of Water Resources

MGW: mb
Enc.

Proof of Appropriation of Water

Application No. 4912 Permit No. 4775

1. Name of Permittee TOWN OF ZILLAH
2. Postoffice address ZILLAH, WASHINGTON
3. Source of appropriation Well
4. Name or number of works (if any) No. 4
5. For what purpose or purposes is water used? Municipal
6. Give date of beginning of construction February, 1958
7. Give date of completion of construction work, including water distribution system August, 1958
8. Give date when water was completely applied to proposed use August 10, 1958
9. If used for irrigation:

   Give number of acres described in permit

   Give number of acres actually irrigated
10. If used for power: HP actually developed
11. LEGAL DESCRIPTION OF PROPERTY ON WHICH WATER IS USED:

    TOWN OF ZILLAH

12. During what months is water used? 12 months
13. Does map filed with your application show correctly the location of well or point of diversion for withdrawal of water, and area of land where water is used? Yes
14. If the dimensions, location or type of structure do not correspond to those described in your permit, state what changes have been made, giving dimensions, etc.
15. Actual measured discharge or diversion of permanent system: 550 (gpm or cfs)

552 gpm
2.96 cfs

(Sign certification on reverse side)

STATE PRINTING PLANT OLYMPIA, WASHINGTON

STATE OF WASHINGTON,
County of Yakima } ss.

I, James P. Daley, being first duly sworn, depose and say that I have read the above and foregoing proof of appropriation; that I know the contents thereof; and that the facts therein stated are true.

IN WITNESS WHEREOF, I have hereunto set my hand this 7th day of May, 1959.

James P. Daley

Subscribed and sworn to before me this 7th day of May, 1959

David W Ross
Notary Public.
In and for the State of Washington
residing at Zillah

RECEIVED
STATE OF CONSERVATION
APR 28 1959

Notice of Completion of Construction

I, TOWN OF ZILLAH, the holder of Ground Water Permit No. 4775 issued by the State Supervisor of Water Resources of the State of Washington for the appropriation of ground waters withdrawn from a well (Well, tunnel or infiltration trench), in accordance with the tenor of such permits and the limitations endorsed therein by the State Supervisor of Water Resources, have completed the construction of the works described therein, on the ..... day of August, 19 58

If construction has been abandoned: Date ..... Reason .....

Remarks: .....

IN WITNESS WHEREOF, I have hereunto set my hand this 27 day of April, 19 59

Town Clerk (Signature of applicant)

City Hall Zillah, Washington (Present address)

S. F. No. 378—4-51—3M. 27804.

STATE OF WASHINGTON
DEPARTMENT OF CONSERVATION
DIVISION OF WATER RESOURCES

Permit to Appropriate Public Ground Waters of the State of Washington

Book No. 10 of Ground Water Permits, on page 4775 under Application No. 4912

TOWN OF ZILLAH, WASHINGTON

~~X~~

is hereby granted a permit to appropriate the following described public ground waters of the State of Washington, subject to existing rights, and to the limitations and provisions set out herein.

Priority date of this permit is July 9, 1958

Source of the proposed ground water appropriation is a well

within ..... area, ... sub-area

..... zone. Name or number of works is .....

Quantity of water appropriated shall be limited to the amount which can be beneficially applied and not to exceed 813 gallons per minute; 296 acre-feet per year, to be used for the following purposes: municipal supply

as more definitely set out below.

Location of the well, tunnel, or infiltration trench is 1950 feet west and 250 feet south of northeast corner of sec.36

being within NE¼NW¼NE¼, sec.36, T.11 N., R.20 E.W.M.

county of Yakima

Use, or uses to which water is to be applied:

For municipal supply: 813 gallons per minute; 296 acre-feet per year,

to supply the Town of Zillah.

For irrigation: ..... gallons per minute: ..... acre-feet per year

for the irrigation of ..... acres.

For miscellaneous uses: ..... gallons per minute: ..... acre-feet per year,

for .....

LEGAL DESCRIPTION OF PROPERTY ON WHICH WATER IS TO BE USED

Town of Zillah, Yakima County, Washington.

WILLARD GRAY
MAYOR

JAMES P. DALEY
TOWN CLERK

GEOFFREY HILTON
TOWN TREASURER

The Town of Zillah

Zillah, Washington



Where Soft Fruit Reigns in the Heart of the Roza

June 20, 1958

JUN 2 ? 1958
AM PM
7,8,9,10,11,12,1,2,3,4,5,6

Dept. of Conservation
335 General Administration Building
Olympia, Washington

Dear Mr. Russell:

I am enclosing a voucher for the examination fee for ground water right permit for Zillah municipal well no. 4. Would you please sign the enclosed voucher and return to me so that I can submit a warrant for $10.00 with our permit application.

The failure on our part to obtain the necessary permit was due to the fact that we have a well about 30 feet away that was abandoned due to difficulties in rehabilitation of the well. The new well was drilled to the same depth and our engineer assumed that we did not have to obtain a new permit. However we will be able to take 813 g.p.m. from the well although a 500 g.p.m. pump was installed for the present. All arrangements have been made to install a larger pump if the occasion demands in the near future.

Very truly yours,

Jim

Jim Daley
Town Clerk

June 24, 1958

The Town of Zillah
Zillah,
Washington

Attention: Jim Daley, Town Clerk

Gentlemen:

Returned herewith is the town's voucher signed as requested. The warrant should accompany the completed application when submitted.

The other well to which you refer was drilled under Permit No. 435 and is apparently the one which proved non-productive and in response to your letter of June 18, 1949 that permit was cancelled. For that reason the new well will require a permit.

Yours very truly,

DEPARTMENT OF CONSERVATION
EARL COE, DIRECTOR

ROBERT H. RUSSELL, Asst. Supervisor
Division of Water Resources

RHR:fls
Enc.

DESCRIPTION OF WORKS FROM WHICH WATER IS TO BE WITHDRAWN

The well will be drilled (Dug or drilled) and have a diameter of 12 inches, and depth of 280 feet.

Description of tunnel or infiltration trench:

(Please read carefully provisions below)

Particular specifications required by the Supervisor of Water Resources for the purpose of preventing waste of public waters:

The total yearly withdrawal authorized under this filing shall be limited to 290 acre-feet per year, less any amount available from other sources under existing rights.

Construction work shall begin on or before Started and shall thereafter be prosecuted with reasonable diligence and completed on or before May 1, 1960

and complete application of water to proposed use shall be made on or before May 1, 1961

Given under my hand and the seal of this office at Olympia, Washington, this 17th day of April, 1959.

M B Walker

State Supervisor of Water Resources

RETURN TO:
DIVISION OF WATER RESOURCES
335 GENERAL ADMINISTRATION
OLYMPIA, WASHINGTON

S. F. No. 7256—4-57—5M. 48912.

RECORD BY WELL DRILLER OR OTHER CONSTRUCTOR OF WORKS FOR WITHDRAWAL OF GROUND WATER

JUN 13 1958

AM 7,8,9,10,11,12,1,2,3,4,5,6 PM

Under Permit No. G. W. _____

("The well driller or other constructor of works for the withdrawal of public ground waters shall be obligated to furnish the permittee a certified record of the factual information necessary to show compliance with the provisions of this section." Sec. 8, Chap. 263, Laws of 1945.)

1. Town of Zillah, Washington
(Name and address of owner of well or other works for withdrawal of water)
2. Type; name or number of works where water is taken Municipal Well #4
(Well, tunnel or infiltration trench)
3. Date on which work on well or other structure was started January 31, 1958 (spud-in)
4. Date on which work was completed February 19, 1958 - final depth
5. If work on well or other structure was abandoned, give date —
and reason for abandonment —
6. DESCRIPTION OF WORKS:

(a) WELL: Depth 280 ft. Diameter 12" in. or ft. Dug or drilled drilled

Flowing or pump well pump . Water Temp. _____

IF PUMP WELL: Type and size of pump is vertical turbine 500 GPM

Type and size of motor or engine is 50 Hp. electric motor

Depth from ground surface to water level before pumping 109 feet

After continuous operation for 24 hours, the measured discharge of the pump is
(At least four)

813 g.p.m., and the drawdown of water level is 119 feet
(Pumping level minus static water level)

Recovery data (taken after pump has been shut off) (time taken as zero when pump turned off) (water level measured from well top to water level)

Time	Water Level	Time	Water Level
Fully recovered in one hour			

Date of test March 21 - 24, 1958

IF FLOWING WELL: Measured discharge _____ g.p.m. on _____
(Date)

Shut-in pressure at ground surface _____ lbs. per sq. in. on _____
(Date)

Water is controlled by _____
(Cap, valve, etc.)

CASING: (Give diameter, commercial specifications and depth below ground surface of each casing size.)

12" in. diameter Standard black steel pipe from 0 to 242 ft.

_____ in. diameter _____ from _____ to _____ ft.

_____ in. diameter _____ from _____ to _____ ft.

_____ in. diameter _____ from _____ to _____ ft.

Describe and show depth of shoe, plug, adapter, liner or other details:

Perforated casing or screens:

40' Johnson Everdur screen, 12" diam. from 238' 2" to 279' 9" ft.
(Number per foot and size of perforations, or describe screen)

10' of #20 slot; 30' of #30 slot from ____ to ____ ft.

from ____ to ____ ft.

from ____ to ____ ft.

from ____ to ____ ft.

LOG OF WELL OR TUNNEL: (Describe each stratum or formation clearly, indicate if water bearing, and give thickness and depth as indicated.)

MATERIAL	Thickness (Feet)	Depth to bottom (Feet)
Topsoil	2	2
Brown hardpan	3	5
Gray clay	36	41
Brown sandy clay	92	133
Gray clay	12	145
Brown clay	23	168
Hard brown sand and gravel	37	205
Hard sandy silt, gravel & a little clay	25	230
Cemented gravel	5	235
Sand and gravel	10	245
Sand, gravel, silt and pea gravel	18	265
Sand, silt and gravel	17	280

(b) INFILTRATION TRENCH OR TUNNEL: Type ____

Dimensions: ____ (Tunnel—length, course, and cross-sectional size) (Trench—minimum and maximum depths)

Bottom width ____ ft. Discharge ____ g.p.m. Date of test ____

Position of water bearing stratum with reference to portal of tunnel ____

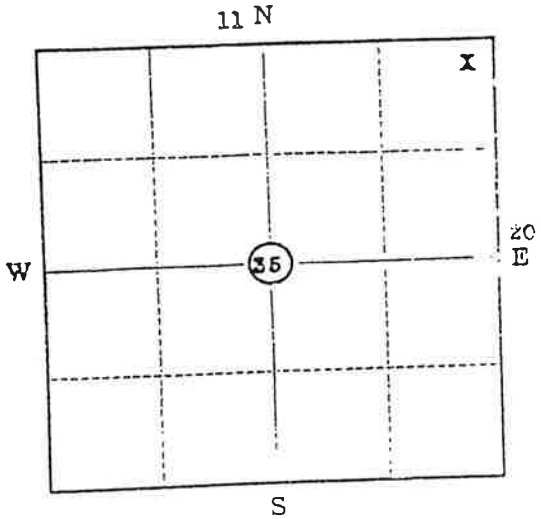

Sec. 35 Twp. 11 N. Rge. 20 E

Show approximate location of well or other works with (X) on section plat at left.

MIDLAND DRILLING CO.

By. Eugene J. Jungmann
Signature of well driller or other contractor

Eugene J. Jungmann, Vice President

P. O. Box 637

Walla Walla, Washington
Address

Report of Examination on Ground Water

Received date 7-9-58 Date of exam. 10-22-58 11-17-58 Appl. No. 4912

Name Town of Zillah Address City Hall, Zillah, Washington

Type of works well #4 Dimensions 12"x280'

Progress of works Drilled but not fully developed

Quantity applied for 813 g.p.m. acre-feet per year

Legal sub NE¼NW¼/ Sec. 36 Twp. 11 N. Rge. 20 E. County Yakima

Use municipal supply

Irrigation-acreage: Present Planned Feasible

Municipal: Population 1200 as of 1960

Industrial

Time pump will be operated continuously

Other water rights appurtenant to this land see below

Proximity to existing works, springs, wells, or streams Town of Zillah N. 1000 ft. and NW 100 ft.

Area Sub-area Zone

RECOMMENDATIONS

Approved for 813 g.p.m. 296 acre-feet per year, subject to existing water rights. (1 acre-foot 325,850 gallons.)

The total quantity of water recommended above is based on a withdrawal of 200 gallons per person per day being adequate for the domestic requirements for the Town of Zillah. Actually this amount may be somewhat excessive since lawn irrigation water is supplied from a separate source under the Zillah Irrigation District. However, permit should issue as recommended based on an anticipated population of 1200 people requiring 269 acre-feet per year, plus an allowance of 10% for population increase in the near future.

At the present time the applicant holds numerous ground water rights. These rights are for municipal supply purposes and are as follows:

Declaration Certificate #605 for the withdrawal of 50 g.p.m. and 80 acre-feet per year.
Declaration Certificate #606 for the withdrawal of 276 g.p.m. and 150 acre-feet per year.
Declaration Certificate #607 for the withdrawal of 150 g.p.m. and 10 acre-feet per year.
Certificate 1277-A for the withdrawal of 250 g.p.m. and 146 acre-feet per year.

Of the wells covered by the above rights, three have been abandoned and one is presently in use. The well covered by Declaration Certificate #606 is located near the city storage reservoir and presently yields about 250 g.p.m.

In view of these prior rights, it is recommended that this application be approved as a partial supplemental supply to the source presently utilized. Permit should therefore include the provision: "The total yearly withdrawal authorized under this filing shall be limited to 296 acre-feet per year, less any amount available from other sources under existing rights."

The installation of an access port to well as described in attached Ground Water Bulletin No. 1 is recommended.

Signed this 27th day of February, 1959.

Glen H. Fiedler

GLEN H. FIEDLER, Deputy Supervisor
Division of Water Resources

WATER RIGHTS – RAINIER WELL APPLICATION

State of Washington Department of Ecology

APPLICATION FOR PERMIT

TO APPROPRIATE PUBLIC WATERS OF THE STATE OF WASHINGTON

☐ SURFACE WATER ☒ GROUND WATER

RECEIVED [illegible] 16 1988 DEPARTMENT OF ECOLOGY CENTRAL REGION OFFICE

$10.00 MINIMUM STATUTORY EXAMINATION FEE REQUIRED WITH APPLICATION

(GRAY BOXES FOR OFFICE USE ONLY)

APPLICATION NO	W.R.I.A	COUNTY	PRIORITY DATE	TIME	ACCEPTED
G129863	37	Yakima	12-16-88		SMB

APPLICANT'S NAME — PLEASE PRINT: City of Zillah

BUSINESS TEL: 829-5151

HOME TEL:

ADDRESS (STREET): P.O. Box 475 (CITY): Zillah, Washington (STATE): 98953 (ZIP CODE):

DATE & PLACE OF INCORPORATION IF APPLICANT IS A CORPORATION:

1. SOURCE OF SUPPLY

IF SURFACE WATER	IF GROUND WATER
SOURCE (NAME OF STREAM, LAKE, SPRING, ETC.) (IF UNNAMED, SO STATE)	SOURCE (WELL, TUNNEL, INFILTRATION TRENCH, ETC.): A well
TRIBUTARY	SIZE AND DEPTH: 12" 280'

2. USE

USE TO WHICH WATER IS TO BE APPLIED (DOMESTIC SUPPLY, IRRIGATION, MINING, MANUFACTURING, ETC.): Continous municipal and industrial use and irrigation during irrigation seas

ENTER QUANTITY OF WATER REQUESTED USING UNITS OF: CUBIC FEET PER SECOND CFS OR GALLONS PER MINUTE ~~[illegible]~~ GPM 1600 ACRE FEET PER YEAR

TIMES DURING YEAR WATER WILL BE REQUIRED:

IF IRRIGATION NUMBER OF ACRES	IF DOMESTIC USE NUMBER OF UNITS BY TYPE, E.G. 1-HOME 1-MOBILE HOME 2-CAMPSITES, ETC.	IF MUNICIPAL USE ESTIMATED POPULATION 20 YEARS FROM TODAY
150	~1000	4,000

DATE PROJECT WAS OR WILL BE STARTED	DATE PROJECT WAS OR WILL BE COMPLETED
Started	2000

3. LOCATION OF POINT OF DIVERSION/WITHDRAWAL

3A. IF IN PLATTED PROPERTY

LOT	BLOCK	OF (GIVE NAME OF PLAT OR ADDITION)	SECTION	TOWN	RANGE	ALSO, PLEASE ENCLOSE A COPY OF THE PLAT AND MARK THE POINT(S) OF WITHDRAWAL OR DIVERSION

3B. IF NOT IN PLATTED PROPERTY

ON ACCOMPANYING SECTION MAPS, ACCURATELY MARK AND IDENTIFY EACH POINT OF DIVERSION SHOW NORTH-SOUTH AND EAST-WEST DISTANCES FROM NEAREST SECTION CORNER OR PROPERTY CORNER

ALSO, ENTER BELOW THE DISTANCES FROM THE NEAREST SECTION OR PROPERTY CORNER TO THE DIVERSION OR WITHDRAWAL: 400 feet east and 200 feet south of the north quarter corner of Section 36

LOCATED WITHIN (SMALLEST LEGAL SUBDIVISION)	SECTION	TOWNSHIP N	RANGE (E OR W) W.M.	COUNTY
NW1/4 NE1/4	36	11	20 E.	Yakima

4. DO YOU OWN THE LAND ON WHICH THIS SOURCE IS LOCATED IF NOT, INSERT NAME & ADDRESS OF OWNER: Yes

5. LEGAL DESCRIPTION OF PROPERTY ON WHICH WATER IS TO BE USED

ATTACH A COPY OF THE LEGAL DESCRIPTION OF THE PROPERTY (ON WHICH THE WATER WILL BE USED) TAKEN FROM A REAL ESTATE CONTRACT, PROPERTY DEED OR TITLE INSURANCE POLICY, OR, COPY CAREFULLY IN THE SPACE BELOW

City of Zillah Sub-area service Plan, being Sections 25 and 36 of T. 11 N., R. 20 E.W.M. and the W1/2 of Sections 30 and 31 lying west of Hwy 410, T. 11 N., R. 21 E.W.M.

WHAT IS YOUR INTEREST IN THE PROPERTY ON WHICH T[illegible] TER IS TO BE USED (PROPERTY OWNER LESSEE CONTR[illegible] /RCHASER ETC.)

Owner

ARE THERE ANY EXISTING WATER RIGHTS RELATED TO THE LAND ON WHICH THE WATER IS TO BE USED (INCLUDING WATER PROVIDED BY IRRIGATION DISTRICTS OR DITCH COMPANIES) ☒ YES ☐ NO

IF YES, FROM [illegible] URFACE OR GROUND WATER) AND UNDER WHAT AUTHORITY

G4-29702 606-D 3350-A WRC No. 007086

6. DESCRIPTION OF SYSTEM PROPOSED OR INSTALLED

(FOR EXAMPLE SIZE OF PUMP, CAPACITY OF PUMP, PUMP MOTOR HORSE POWER, PIPE DIAMETER, NUMBER OF SPRINKLERS, ETC.)

50 hp turbine

REMARKS

7. Since the well requested in this application is an Ellensburg Formation well, it could not be included with the two Saddle Mountain Basalt Formation Wells under GWP No G4-29702P. This request supplements that authorized under G4-29702P.

IF 10 ACRE-FEET OR MORE OF WATER IS TO BE STORED AND/OR IF THE WATER DEPTH WILL BE 10 FEET OR MORE AT THE DEEPEST POINT, A STORAGE PERMIT MUST BE FILED IN ADDITION TO THIS PERMIT. THESE FORMS CAN BE SECURED, TOGETHER WITH INSTRUCTIONS, FROM THE DEPARTMENT OF ECOLOGY.

SIGNATURES

C. W. Walker
APPLICANT'S SIGNATURE

CITY OF ZILLAH
LEGAL LANDOWNERS NAME (PLEASE PRINT)

CITY OF ZILLAH
C. W. Walker
LEGAL LANDOWNER'S SIGNATURE

P.O. Box 475 Zillah, WA. 98953
LEGAL LANDOWNER'S ADDRESS

FOR OFFICE USE ONLY

STATE OF WASHINGTON
DEPARTMENT OF ECOLOGY } ss.

This is to certify that I have examined this application together with the accompanying maps and data, and am returning it for correction or completion as follows: .....

.....

.....

In order to retain its priority date, this application must be returned to the Department of Ecology, with corrections, on or before ..... *19*.....

Witness my hand this .....*day of* ..... *19*.....

.....
Department of Ecology

OLYMPIA, WASHINGTON

RECORD BY WELL DRILLER OR OTHER CONSTRUCTOR OF WORKS FOR WITHDRAWAL OF GROUND WATER

JUN 13 1958

Under Permit No. G. W.

AM PM
7,8,9,10,11,12,1,2,3,4,5,6

(The well driller or other constructor of works for the withdrawal of public ground waters shall be obligated to furnish the permittee a certified record of the factual information necessary to show compliance with the provisions of this section." Sec. 8, Chap. 263 Laws of 1945.)

1. Town of Zillah, Washington
(Name and address of owner of well or other works for withdrawal of water)

2. Type; name or number of works where water is taken Municipal Well #4
(Well tunnel or infiltration branch)

3. Date on which work on well or other structure was started January 21, 1958 (spud-in)

4. Date on which work was completed February 19, 1958 - final depth

5. If work on well or other structure was abandoned, give date —

and reason for abandonment —

6. DESCRIPTION OF WORKS:

(a) WELL: Depth 580 ft. Diameter 12" in. or ft. Dug or drilled drilled

Flowing or pump well pump Water Temp.

If PUMP WELL: Type and size of pump is vertical turbine 500 GPM

Type and size of motor or engine is 50 Hp. electric motor

Depth from ground surface to water level before pumping 109 feet

After continuous operation for 24 (At least four) hours, the measured discharge of the pump is 513 g.p.m., and the drawdown of water level is 110 feet (Pumping level minus static water level)

Recovery data (taken after pump has been shut off) (time taken as zero when pump turned off) (water level measured from well top to water level)

Time	Water Level	Time	Water Level
Fully recovered in one hr.			

Date of test March 21 - 24, 1958

If FLOWING WELL: Measured discharge g.p.m. on (Date)

Shut-in pressure at ground surface lbs. per sq. in. on (Date)

Water is controlled by (Cap, valve, etc.)

CASING: (Give diameter, commercial specifications and depth below ground surface of each casing size.)

12" in. diameter Standard black steel pipe from 0 to 342 ft.

in. diameter from to ft.

in. diameter from to ft.

in. diameter from to ft.

Describe

Perforated casing or screens:

40' Johnson Everdur screen, 12" diam.
(Number per foot and size of perforations, or description of screens)
10' of #20 slot; 30' of #60 slot — from 238' 2" to 278' 9" ft.

from ... to ... ft.

from ... to ... ft.

from ... to ... ft.

from ... to ... ft.

LOG OF WELL OR TUNNEL: (Describe each stratum or formation clearly, indicate if water bearing, and give thickness and depth as indicated.)

MATERIAL	Thickness (Feet)	Depth to bottom (Feet)
Topsoil	2	2
Brown hardpan	3	5
Gray clay	36	41
Brown sandy clay	92	133
Gray clay	12	145
Brown clay	23	168
Hard brown sand and gravel	37	205
Hard sandy silt, gravel & a little clay	25	230
Cemented gravel	5	235
Sand and gravel	10	245
Sand, gravel, silt and pea gravel	18	263
Sand, silt and gravel	17	280

(b) INFILTRATION TRENCH OR TUNNEL: Type ...

Dimensions: (Tunnel—length, course and cross-sectional area) (Trench—minimum and maximum depths)

Bottom width ... ft. Discharge ... g.p.m. Date of test ...

Position of water bearing stratum with reference to portal of tunnel ...

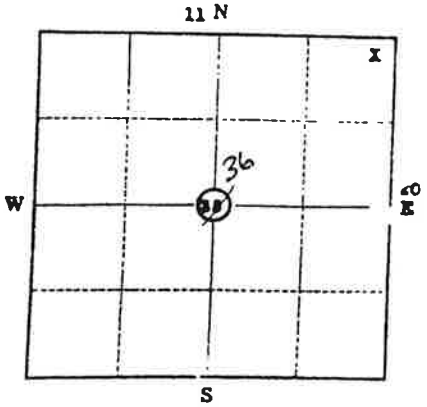

Sec. 36 Twp 11 N. Rge. 30 E

Show approximate location of well or other works with (X) on section plat at left.

MIDLAND DRILLING CO.

By: Eugene G. Jungmann

(Signature of well driller or authorized representative)

Eugene G. Jungmann, Vice President

P. O. Box 637

Walla Walla, Washington

Address

WATER RIGHTS – 3RD AVENUE WELL

CERTIFICATE RECORD NO. 6 PAGE NO. [illegible]

STATE OF WASHINGTON, COUNTY OF Yakima

Certificate of Ground Water Right

Issued in accordance with the provisions of Chapter 263, Laws of Washington for 1945, and the rules and regulations of the State Supervisor of Hydraulics thereunder.

THIS IS TO CERTIFY That TOWN OF ZILLAH

of Zillah, Washington has filed

in the office of the State Supervisor of Hydraulics of Washington Declaration of Claim No. 555

to withdraw ground waters of the State from a Pump Well

located within the E½ of SW¼ of SE¼ of Sec. 25, Twp. 11 N., Rge. 20 E.W.M.

for the purpose of Municipal and industrial supply.

The right to the use of said ground waters has been ~~restained and approved by~~ the Supervisor of Hydraulics in accordance with Chapter 263, Laws of Washington for 1945, and is hereby entered of record in Volume 2 of Ground Water Certificates at page 606-D; the right approved has a priority of the year 1908; the amount of water which the Declarant is entitled to withdraw for the aforesaid purpose is limited to the amount actually beneficially used and shall not exceed 276 gallons per minute; 150 acre-feet per year; and is appurtenant to the following described lands or place of use:

Town of Zillah, Yakima County, Washington.

The right to the use of the ground water aforesaid hereby confirmed is restricted to the lands or place of use herein described, except as provided in Sections 6 and 7, Chapter 122, Laws of 1929.

WITNESS the seal and signature of the State Supervisor of Hydraulics affixed this 12th day of July, 19[illegible]

State Supervisor of Hydraulics.

Declaration of Claim No. 555

CERTIFICATE OF GROUND WATER RIGHT

Recorded in the office of State Supervisor of Hydraulics, Olympia, Washington, in Book No. 2 of Ground Water Right Certificates, on page 606-D on the 12th day of July, 19 43

STATE OF WASHINGTON, } ss.
County of [illegible] }

I certify that the within was received and duly recorded by me in Volume ..... of Book of Water Right Certificates, page ..... on the ..... day of ....., 19.....

.....

STATE PRINTING PLANT, OLYMPIA, WASH.

GROUND WATER

DECLARATION OF CLAIM

PROGRESS SHEET

NAME: Mr. James P. Daley, Town Clerk,
Town of Sillah,
Zillah, Washington

DECLARATION NO. 555 CERTIFICATE NO. [illegible] D

Declaration received 1-8-48 Voucher signed and returned 1-8-48 Recording fee received 1-8-48

Returned for completion or correction _____ Received _____

Amended _____

Cancelled _____

Report: Game _____ Fisheries _____

O.K'd for publication Jan 9 49 by [illegible]

Notice of Declaration sent 1-13-48

Protests filed _____

Affidavit of Publication received and checked 2-25-48

Time for making protests expires March 5, 1948

Examination made 6/21/48 by FBR

O.K'd for Certificate _____ by _____

Statement of filing and recording fee sent 6/28/48 Amount $1.50

Fee received 7-[illegible]-48

Ground Water Certificate issued 7-12-48 No. [illegible] D

REPORT OF FINDINGS ON GROUND WATER Decl. 555

NAME: Town of Lillah, James Seley, Town Clerk

TYPE OF WORKS: Pump Well Date of Examination June 21, 1948

Dimensions: 950' x 1[illegible] Progress of Works completed

QUANTITY Claimed ~~xxx~~ ~~xxxxxxxxxxxx~~: 276 g.p.m. 150 acre feet per year

LOCATION S½ of S½ of S½ of Sec. 25-11-[illegible] within corporate limits, but not platted

USE: Municipal and Industrial

Irrigation- acreage: Present _____ Planned _____ Feasible _____

Municipal: Population 937 as of 1948

Industrial: _____

Time Pump Will be Operated: _____

Other Water Rights of Applicant: Decls. #556 & #557

Proximity to existing works, springs or streams:

2 Town of Lillah wells North 650' & North 630'

Water Bearing Zone: _____

RECOMMENDATIONS

Approved for 276 g.p.m. 150 acre-feet per year, subject to existing water rights. (1 acre-foot = 325,850 gallons)

This well is used at 276 g.p.m. to furnish 150 acre-feet a year according to Mr. Barthlow, Water Superintendent.

Signed this 25th day of June, 1948.

FBR

FRED [illegible]
Ground Water Geologist

JOHN DILLON, Mayor

JAMES P. DALEY, Town Clerk

GEOFFREY HILTON, Town Treasurer

RECEIVED
DEPARTMENT OF
CONSERVATION & DEVELOPMENT

The Town of Zillah

Zillah, Washington

January 21, 1948

Dept. of Conservation & Development
Transportation Building
Olympia, Washington

Dear Mr. Bartholet:

Listed on the section plat is the correct location of the well in question. The correct description as near as we can figure it is E2 SW SE Sec. 25 Twp. 11N N. R. 20E. This location was figured by Hess Morris, Secretary of the Roza Irrigation District, who seems to be the only person in this community who knows anything about this well. We have absolutely no information in our files on this well and Mr. Morris is our only source of information. This well is in Twp. 11N and not 21N as you have on the heading.

Yours truly,

James P. Daley

James P. Daley
City Clerk

STATE OF WASHINGTON

OFFICE OF SUPERVISOR OF HYDRAULICS

Olympia

NOTICE OF DECLARATIONS OF CLAIM OF RIGHT TO WITHDRAW GROUND WATER

NOS. 554, 555 and 556.

To Whom It May Concern: Notice is hereby given that Town of Zillah, Washington, on January 8, 1948, filed with the State Supervisor of Hydraulics, Olympia, Washington, three (3) declarations of claim of vested rights existing prior to June 7, 1945 to withdraw public ground waters in Yakima County, as follows: Declaration No. 554 to withdraw 50 gallons per minute, 80 acre-feet per year, by means of a pump well located within Lot 5, Block 4 of Jaeger's First Addition to Zillah (Sec. 36, Twp. 11 N., Rge. 20 E.W.M.), used continuously each year for domestic supply and industrial uses; with priority (date of first beneficial use of water) as of the year 1910, and Declaration No. 555 to withdraw 276 gallons per minute, 150 acre-feet per year, by means of a pump well located within the Town of Zillah in ~~S. of SW¼~~ E1/2 of S 21-1/4 of S 3/4 of Sec. 25, Twp. 11 N., Rge. ~~21~~ 20 E.W.M., used continuously each year for domestic and industrial supply; with priority of 1908, and Declaration No. 556 to withdraw 150 gallons per minute, 10 acre-feet per year, by means of a pump well located within Lot 5, Block 4 of Jaeger's First Addition to Zillah (Sec. 36, Twp. 11 N., Rge. 20 E.W.M.), used for domestic standby well or for fire use; with priority of 1908, and Claimant has requested Certificates of Ground Water Rights under such claims. Any person, firm or corporation disputing such claims or protesting that the rights claimed are not vested rights to be recognized under Chap. 263 of the 1945 Session Laws of the State of Washington, may file with the State Supervisor of Hydraulics, at Olympia, Washington, such objections or representations, in writing, as he may desire to make within thirty (30) days after date of last publication, which date is_____.

Witness my hand and official seal this 13th day of January, 1948.

RODNEY RYKER, Supervisor of Hydraulics

By: CHAS. J. BARTHOLDT, Deputy

S. F. No. 1134-B—7-47—6M. 13830.

SECTION PLAT

Sec. [illegible] Twp. [illegible] N. R. [illegible]

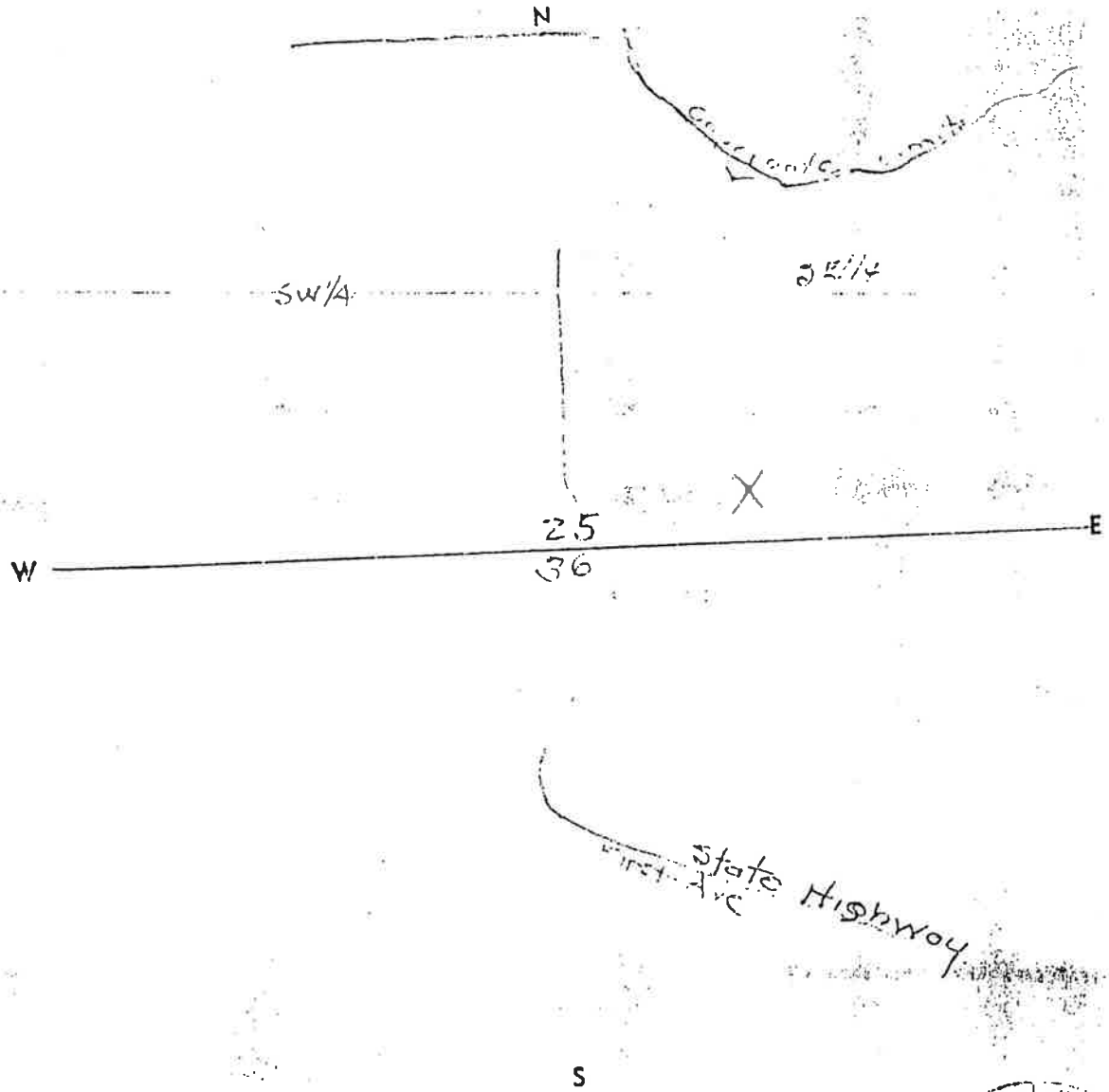

Show by a cross (X) the location of the well or other works covered by the application or declaration. Show by circle (O) the locations of other wells or works within a quarter of a mile. Also traveling directions from nearest town on main highway.

Scale: 1 inch = 800 feet.

PERFORATED CASINGS OR SCREENS:

(Number per foot and size of perforations, or describe screen)

from 10

from to

from to

from to

LOG OF WELL: (*Describe each stratum or formation clearly, indicate if water bearing, and give thickness and depth as indicated.*)

MATERIAL	Thickness (Feet)	Depth to Bottom (Feet)
No information available		

(b) INFILTRATION TRENCH: *Covered or open*

Dimensions: Length ft. *Minimum depth* ft. *Maximum depth* ft.

Bottom width ft. *Discharge* g.p.m. *Date of test*

(c) TUNNEL: *Type of lining*

Dimensions: (Length, course, and cross sectional size)

Position of water bearing stratum with reference to portal of tunnel

Log of tunnel: (Preceding table for log of well may be used, if desired. Give footage from portal and character of materials, as pertinent.)

7. Ownership of each existing well or other works for withdrawal of ground water within a radius of one-quarter mile and the distance and direction from well or other works being reported herein:

(Name of owner)	650 (Distance)	(Direction)	North (Distance)
Town of Zillah	650		North
Town of Zillah			

(On accompanying plat or map show location of the existing wells or works.)

8. *Remarks:* No exact data on this well.

James P. Daley Town Clerk
(Signature of claimant)

STATE OF WASHINGTON,
COUNTY OF Yakima } ss.

I, the claimant named in the foregoing claim, being first duly sworn, depose and say that I have read the above and foregoing claim to ground water right; that I know the contents thereof; and that to the best of my knowledge, information and belief, the facts therein stated are true and correct.

James P. Daley

Subscribed and sworn to before me this 22 *day of* December, 19 47

Notary Public in and for the State of Washington,
Residing at Zillah, Washington

DIRECTIONS FOR PREPARING DECLARATIONS OF CLAIM

A $5.00 examination fee should accompany each declaration.

1. ~~$2.00 filing and recording fee should accompany each declaration.~~

2. Write plainly in ink or use typewriter.

3. Read carefully all questions. Answer only those that apply to your project.

4. In answering Question 2, concerning location, give distance and direction of location of well or other construction works for withdrawal of water from nearest 40 acre corner or other legal subdivision, as

(a) "320 feet north and 1100 feet east from the southwest corner of SE¼ of SW¼ of Sec. 1, Twp. 13 N., Rge. 2 E. W. M.," or
"North 36° 29' east 400 feet from the northeast corner of NW¼ of SW¼ of Sec. 33, Twp. 12 N., Rge. 3 W. W. M." or

(b) If within limits of incorporated town or city, or recorded plat:
"Lot 4, Block 6 of Churchill's Addition to City of Spokane."

5. Maps, showing location of well or other works and place of use, must be made in triplicate (3) on the enclosed section plats. If for irrigation, show the approximate area irrigated. Show also location of other existing wells or other works for withdrawing ground water within a radius of one-quarter mile.

6 Sign declaration and affidavit on back of form

S. F. No. 7349 - 12-45-3M 10784

accompany each declaration.

STATE OF WASHINGTON
DEPARTMENT OF CONSERVATION AND DEVELOPMENT
Division of Hydraulics

Declaration of Ground Water Claim

(Separate claims should be filed for each well, tunnel or infiltration trench)

Declaration No. 555 *Your well No.* ..... (If you have more than one)

I, Town of Zillah by James F. Daley, Town Clerk (Name of claimant)

of Zillah, Washington (Complete postoffice address)

do hereby make declaration of claim of vested right to ground water by use prior to June 7, 1945, and file the same with the State Supervisor of Hydraulics, in accordance with Section 9, Chapter 263, Laws of 1945 of the State of Washington, and request a Certificate of Ground Water Right thereunder.

1. SOURCE *from which water is withdrawn is* Pumping well (Flowing well, pump well, infiltration trench, or tunnel)

2. LOCATION *is:* Approximately 1,300 feet north of Zillah City Hall (Approximate distance and direction from nearest city or town)

and is more particularly described as follows:

(a) ..... (Give distance and bearing to corner of section or other legal subdivision)

being within NW¼ SW¼ (Smallest legal subdivision) *of Sec.* 25 *Twp.* 11 *N., Rge.* 20 21 E. (E. or W.)

or (b) Within limits of recorded platted property, town or city: Within corporate limits but not platted

in Lot ....., *Block* ..... *of* ..... (Name of plat or addition)

Zillah (If within city or town, give name) *County of* Yakima *within* ..... (Leave blank) *area*

..... (Leave blank) *sub-area* ..... (Leave blank) *zone*

(c) The location of the well or other works is shown on the accompanying plat, or other adequate maps or drawings

(d) The owner of property on which the works are constructed is:

Town of Zillah (Name) Zillah, Washington (Post office address)

3. CONSTRUCTION WORK *was begun on* ? (Date) *; was completed on* ? (Date)

and the ground water claimed was first used for the purposes set out below on 1908 (Date)

since which time the water has been used Continuously in summer, intermittenly in winter (Continuously or intermittently)

from ..... (Date) *to* 1947 (Date)

4. QUANTITY *of water claimed and used is* 276 *gallons per minute:* 150 *acre feet per year.*

Maximum number of days water is used each year:

For irrigation: ..... *days.*

For other purposes: 120 *days.*

5. PURPOSE OR PURPOSES *for which water is used* Domestic municipal and industrial use

(Domestic, irrigation, municipal, manufacturing, industrial, etc.)

(a) FOR MUNICIPAL SUPPLY: To supply the city, town or community of Zillah

in the county of Yakima, having a present population of 937, and an estimated population of 1,200 in 19 50

(b) FOR IRRIGATION: The land irrigated has a total area of acres, and water is used each year for this purpose from (Date) to (Date)

(c) Legal description of property on which water is used for all purposes other than municipal supply:

6. DESCRIPTION OF WORKS:

(a) WELL: Depth 950 feet. Diameter 12 inches or feet. Dug or drilled drilled

Flowing or pump well pump

IF PUMP WELL: Type and size of pump is A Sterling 8" 17 bowl unit deep well turbine

Type and size of motor or engine is 25 horsepower 220 U. S. Induction motor

Depth from ground surface to water level before pumping 116 feet.

After continuous operation for at least four hours, the measured discharge of pump is 276 g.p.m., and the drawdown of water level is 276 feet.

Date of test 1940

IF FLOWING WELL: Measured discharge g.p.m. on (Date)

Shut-in pressure at ground surface lbs. per sq. in. on (Date)

Water is controlled by (Cap, valve, etc.)

CASING: (Give diameter, commercial specifications and depth below ground surface of each casing size.)

12 distances not known inch diameter from to feet

8 " " " inch diameter from to feet

inch diameter from to feet

inch diameter from to feet

Describe and show depth of shoe, plug, adapter, liner or other details:

WATER RIGHTS – WIPPCO WELL

State of Washington
Department of Ecology
Yakima, Washington

IN THE MATTER OF APPLICATION)
FILED BY THE CITY OF ZILLAH)
TO CHANGE THE PURPOSE OF USE)
AND THE PLACE OF USE AS CLAIMED)
IN WATER RIGHT CLAIM NO. 007086)

Report of Findings
Conclusions, and
Recommendations

Background

On August 14, 1987, the City of Zillah filed an application to change the purpose of use and the place of use claimed in Water Right Claim No. 007086. The application was accepted and public notice was made. The 30-day protest period expired with no protests being received.

Investigation

A field inspection was conducted by the author on February 2, 1988. Based on this inspection, conversations with various city officials including Mrs. Althea Spencer, the City Clerk, and a review of WDOE office records, the following data were collected:

Water Right Claim No. 007086 was filed on December 14, 1971 by Dallas Anderson for Stokely-Van Camp, Inc. It claims the withdrawal of 1400 gallons per minute (gpm), 2250 acre-feet per year for a continuous industrial food processing supply with the date of first use being September, 1942. The claim states that 700 gpm and 1125 acre-feet per year were currently being withdrawn. The well was listed as being located approximately 610 feet north and 810 feet east from the southwest corner of Section 25, being within the SW1/4 SW1/4 of Section 25, T. 11 N., R. 20 E.W.M. The claimed place of use was described as being the following:

Beginning at a point on the northern line of the right-of-way for the Northern-Pacific Railroad located 490 feet southeast from the intersection with the western line of Section 25, T. 11 N., R. 20 E.W.M.; thence southeasterly along said right-of-way 649.4 feet; thence northeasterly 161.8 feet; thence northwesterly parallel to the northern right-of-way line 439.6 feet; thence southwesterly 244.4 feet to the point of beginning. Also the southern 0.04 acre of that portion of the eastern 102 feet of the western 404 feet of the SW1/4 SW1/4 of said section lying north of the Northern-Pacific Railroad right-of-way. Also the southern 20 feet of Bartley Street vacated.

Prior to ownership by Stokely-Van Camp, Inc., the property was owned by Big Y Fruit. The exact age of the well is unknown, however, it is believed to have been drilled when the property was owned by Big Y Fruit. No well report is available for the well, however, it is believed to be approximately 700 feet deep. A 75 horsepower, turbine pump had been installed in the well when it was operated by Stokely-Van Camp, Inc. When the fruit processing plant closed, the well, with water right claim, was sold to the City of Zillah. The city installed a 40 horsepower, turbine pump in the well and constructed a well house. Although the well may have produced more than 700 gpm in the past, recent withdrawal and current plans for withdrawal have and will not exceed this quantity. Since the city plans to use the well for a portion of their municipal supply, they have requested that the purpose of use be changed to continuous municipal supply and that the place of use be changed to the Zillah City service area.

df 12-16-88 800'

40 HP pump installed by Wippco between 1978-80 df 12-16-88

The intent of the Water Right Claims Registration Act, Chapter 90.14 RCW, was to document those uses of surface water in existence prior to the adoption of the State Surface Water Code, Chapter 90.03 RCW, which was adopted in 1917, and those uses of ground water in existence prior to the adoption of the State Ground Water Code, Chapter 90.44 RCW, which was adopted in 1945. Since each code's adoption, the only means of acquiring a right within the State is by filing for, and receiving, a permit from the Department of Ecology.

The City of Zillah is currently the holder of five water right certificates. These are described below:

Certificate of Ground Water Right No. 605-D (with a 1910 priority date) authorizes the withdrawal of 50 gpm, 80 acre-feet per year for a municipal and industrial supply to be used within the Town of Zillah. It is located within Lot 5 of Block 4 of Jaeger's Addition to Zillah, Washington. The well is a 6-inch diameter well that was drilled to a depth of 167 feet. In 1940, the static water level was determined to be 116 feet below land surface with a dynamic water level of 130 feet below land surface. The well, equipped with a five horsepower pump, was capable of producing 50 gpm. This well has been abandoned and sealed since prior to 1958.

Certificate of Ground Water Right No. 606-D (with a 1908 priority date) authorizes the withdrawal of 276 gpm, 150 acre-feet per year for a municipal and industrial supply to be used within the Town of Zillah. The well is located within the E1/2 SW1/4 SE1/4 of Section 25, T. 11 N., R. 20 E.W.M. It is a 12-inch diameter well that is drilled to a depth of 950 feet. Based on the geological formations expected to be present at the well site, it is likely this well penetrates and derives water from the Saddle Mountains Basalt Formation. In 1940, the static water level was measured to be 116 feet below land surface and the dynamic water level was 276 feet below land surface. The well, equipped with a 25 horsepower, turbine pump was capable of producing 276 gpm. This well is located near one of the city reservoirs and is still used as one of the production wells for the city.

3rd Ave. Well

Certificate of Ground Water Right No. 607-D (with a priority date of 1908) authorizes the withdrawal of 150 gpm, 10 acre-feet for a domestic supply and for fire protection within the Town of Zillah. The well is located within Lot 5 of Block 4 of Jaeger's First Addition to Zillah. It is a 8-inch diameter well that is drilled to a depth of 160 feet. The static water level was determined to be 116 feet below land surface and the dynamic water level to be 120 feet below land surface in 1940. With a 15 horsepower pump installed in the well, the capacity was 150 gpm. This well was used as a backup well since continuous pumping resulted in sanding problems. Prior to 1958, this well was abandoned and sealed.

With a priority date of May 14, 1952, Ground Water Certificate No. 1277-A was issued to the Water Department of the Town of Zillah authorizing the withdrawal of 250 gpm, 146 acre-feet per year for a municipal supply for the Town. The well, which is located within the NE1/4 NW1/4 NE1/4 of Section 36, T. 11 N., R. 20 E.M.W., is a 280-foot deep well that is cased with 10-inch casing to a depth of 92 feet and with 8-inch casing from 92 to 268 feet below land surface. The casing is perforated from 248 to 266 feet below land surface. There is no well report for the original well, which was only 170 feet deep. When the well was deepened, it penetrated cemented gravel, sand and clay, cemented gravel, clay, and terminates in gravel and sand. The static water level was measured to be 112 feet below land surface in 1952 and the dynamic water level was 127 feet below land surface. A 15 horsepower, turbine pump is installed in the well. This well served as a backup well but has since been abandoned.

The final right is Ground Water Certificate No. 3350-A with a priority date of July 9, 1958. It authorizes the withdrawal of 550 gpm, 296 acre-feet per year for a municipal supply for the Town of Zillah. The well is located within the NE1/4 NW1/4 NE1/4 of Section 36, T. 11 N., R. 20 E.W.M. It is a 12-inch diameter well that is drilled to a depth of 280 feet and cased to 242 feet. The casing is perforated from 238.2 to 279.8 feet below land surface. It penetrates soil, hardpan, clay, sand and gravel, cemented gravel, sand and gravel, and terminates in a sand, gravel, and silt mixture. Water is derived from the unconfined sediments of the Ellensburg Formation. The static water level was measured to be 109 feet below land surface and the dynamic water level was 110 feet below land surface. This well has served as the primary source of water for the city.

Rainier Ave Well

* Original application for 813 gpm

Since the wells authorized under Ground Water Certificates No. 605-D, No. 607-D, and No. 1277-A have been abandoned and sealed, these three certificates should be relinquished. Based on the status of the remaining wells and the rights associated with them, the city is authorized to withdraw a total of 1089 gpm and 446 acre-feet per year under Ground Water Certificates No. 606-D and No. 3350-A. The city has two water storage reservoirs. One has a capacity of 75,000 ~~cubic feet~~ gallons and the other has a capacity of ~~50,000~~ 750,000. df 12-16-88

The current population of the City of Zillah is 1,838 people. From November 1, 1987 to October 31, 1988, the City supplied 394.3 acre-feet of water to metered customers. Based on this annual water consumption and the current population, the per capita consumption rate for the City is currently 0.22 acre-feet per year per person. Since the City estimates the population may approach 4,000 people by the year 2000 and significant changes in water consumption are not anticipated, the annual water requirement would approach 858.1 acre-feet per year by 2000. This figure represents an annual consumption of 412.1 acre-feet per year more than is currently authorized. The 858.1 acre-feet per year is, however, less than the quantity claimed and historically used under Water Right Claim No. 007086.

There are four ground water certificates on record within a three-quarter mile radius of the city's well (the former Stokely-Van Camp, Inc. well). All these wells are at the same approximate elevation as the city's well. It is likely they all derive water from the unconfined sediments of the Ellensburg Formation. Ground Water Certificate No. 533-D was issued to the Northern Pacific Railway Company authorizing the withdrawal of 65 gpm, 32.2 acre-feet per year for a water supply for locomotives. The well is located within the NE1/4 NW1/4 of Section 36, T. 11 N., R. 20 E.W.M. and the water was to be used at the station grounds of the Northern Pacific Railway Company in Zillah. The well is described as a 6-inch diameter well that is 145 feet deep, however, no well report is available. This well is located approximately 1600 feet southeast of the applicant's well site. It is unlikely that the right is currently being exercised.

Land owned by city south well [illegible] and will [illegible] right (533-D) df 12-16-88

Ground Water Certificate No. G4-23170C was issued to Douglas Merkle for a well located approximately 880 feet west and 760 feet north from the center of Section 25, being within the W1/2 SE1/4 NW1/4 of Section 25, T. 11 N., R. 20 E.W.M. It authorizes the withdrawal of 19 gpm, 17 acre-feet per year for a domestic supply and for the supplemental irrigation of 3 acres located within the E1/2 SW1/4 SE1/4 NW1/4 and the NW1/4 SE1/4 NW1/4 of Section 25, T. 11 N., R. 20 E.W.M. Primary irrigation water is obtained through the Sunnyside Valley Irrigation District. The well is a 6-inch diameter, 128-foot deep well that is cased to 126 feet. It penetrates soil, sand, cemented gravel, sand, clay, sandstone, and terminates in a sand and gravel mixture that is water bearing. The static water level was 16 feet below land surface when the well was completed in 1974. This well is located approximately 2900 feet north-northeast of the instant well site.

Two wells are authorized under Ground Water Certificate No. G4-23743C which was issued to James R. Wyn. Both wells are located within the NE1/4 SE1/4 of Section 26, T. 11 N., R. 20 E.W.M. Well No. 1 is more specifically located approximately 280 feet west and 700 feet south from the east quarter corner of Section 26 while Well No. 2 is located approximately 500 feet west and 1250 feet south from the same east quarter corner. This certificate authorizes the withdrawal of 300 gpm, 151 acre-feet per year for a domestic supply and for the irrigation of 28 acres located within a portion of the E1/2 SE1/4 of Section 26, T. 11 N., R. 20 E.W.M. There is no information available regarding the construction of the wells. These wells are located approximately 1900 feet northwest of the applicant's well site.

The final certificate is Ground Water Certificate No. G4-27362C. It was issued to Harriet Clark authorizing the withdrawal of 10 gpm, 5.3 acre-feet per year for stock water and for the irrigation of 1 acre located within the SW1/4 SW1/4 SE1/4 of Section 25, T. 11 N., R. 20 E.W.M. The well is located approximately 200 feet north and 100 feet east from the south quarter corner of Section 25, T. 11 N., R. 20 E.W.M. Although no well report is available, the well is believed to be 62 feet deep. This well is located about 2200 feet east-northeast of the applicant's well.

There are 16 domestic wells on record within a mile radius of the applicant's well site. They range in depth from 60 to 208 feet with a mean depth of 139.3 feet.

Conclusions

Based and these data, the following conclusions are drawn:

Since the well was drilled for and/or used by Big Y Fruit and Stokely-Van Camp, Inc., the beneficial use of water can be traced back to being prior to 1945. The instantaneous quantity of water withdrawn was likely 700 gpm based on current and past pump sizes. Since the canning industry involves high water consumption, the annual quantity of water historically used was likely greater than the city's future requirement of 858.1 acre-feet per year. It, therefore, appears that Water Right Claim No. 007086 is a valid claim that has not relinquished due to non-use.

Changing the purpose of use from a continuous industrial supply to a continuous municipal supply should not significantly alter the historical water use pattern. Since the claimed quantities of water will not be exceeded, the requested changes in the place of use and the purpose of use will not enhance the right as claimed under Water Right Claim No. 007086. Approval of these changes is in the public interest as the changed right will make it possible for the City of Zillah to fulfill their municipal water supply commitments now and in the future.

Recommendations

It is recommended that the requested change in the purpose of use and the place of use be approved for Water Right Claim No. 007086.

Since the annual quantity of water required by the city will depend on the future population and development of the area, the City of Zillah will have until the year 2000 to put the water to full beneficial use under the approved change. At the end of this development period, a certificate of change will issue authorizing the withdrawal of 700 gpm and a maximum of 858.1 acre-feet per year for a municipal supply to be used within the city limits of the City of Zillah. The authorized point of withdrawal will be described as being located approximately 610 feet north and 810 feet east from the southwest corner of Section 25, being within the SW1/4 SW1/4 of Section 25, T. 11 N., R. 25 E.W.M.

The combined withdrawal between Ground Water Certificates No. 606-D, No. 3350-A, and this right shall not exceed 1526 gpm and 858.1 acre-feet per year.

Since the applicant has abandoned the wells authorized under Ground Water Certificates No. 605-D, No. 607-D, and No. 1277-A and no longer withdraws water under these certificates, they will be required to relinquish these rights prior to issuance of a certificate of change for the instant application.

REPORT BY: Darlene M. Frye DATE: December 9, 1988
Darlene M. Frye

APPROVED BY: Doug Clausing DATE: 12/12/1988
Doug Clausing, Regional Supervisor

ska
1219rm8

STATE OF WASHINGTON
DEPARTMENT OF ECOLOGY

RECEIVED
AUG 14 1987
DEPARTMENT OF ECOLOGY
CENTRAL REGION OFFICE

Accepted By: BP
Date: 8-31-87
Is Field Exam. Required? ☐ YES ☐ NO
Determined By

APPLICATION FOR CHANGE OF WATER RIGHT

☒ PURPOSE ☐ DIVERSION OR WITHDRAWAL
☒ PLACE ☐ ADDITIONAL POINT OR POINTS

LW21A 37 CHW2C 007086

NAME: TOWN OF ZILLAH
Bus Tel: 829-5151
Home Tel:
Other Tel:

ADDRESS: PO BOX 475 (CITY) ZILLAH (STATE) WA (ZIP CODE) 98953

APPLICATION NUMBER | PERMIT NUMBER | CERTIFICATE NUMBER: WRC 007086

DECREED RIGHT (TITLE OF CASE)

APPROPRIATIONS MADE (GIVE DATE IF PRIOR TO JUNE 7, 1917 IF SURFACE WATER, OR JUNE 7, 1945 IF GROUND WATER): 1942

IS THE WATER RIGHT RECORDED IN YOUR NAME? ☐ YES ☒ NO
IF NO, GIVE NAME RECORDED UNDER: STOKELY-VAN CAMP, INC.

1. RIGHT CONSISTS OF

WATERS USED FROM (STREAM, LAKE, WELL, OR TRENCH, ETC.): A WELL
GALLONS PER MINUTE OR CUBIC FEET PER SECOND: 700 GPM / 1.25 AC/FT
WATER CURRENTLY USED FOR: INDUSTRIAL / FOOD PROCESSING
TIME OF USE: CONTINUOUSLY

2. LOCATION OF PRESENT POINT OF DIVERSION OR WITHDRAWAL

ENTER BELOW THE DISTANCES FROM THE NEAREST SECTION OR PROPERTY CORNER TO THE DIVERSION OR WITHDRAWAL.
610 FT N. + 810 FT E. FROM SW CORNER 25

LOCATED WITHIN (SMALLEST LEGAL SUBDIVISION)	SECTION	TOWNSHIP N.	RANGE (E. OR W.) W.M.	COUNTY
SW¼ SW¼	25	11	20E	YAKIMA

IF THIS IS WITHIN THE LIMITS OF A RECORDED PLATTED PROPERTY, COMPLETE THIS SECTION

LOT	BLOCK	OF (GIVE NAME OF PLAT OR ADDITION)

3. LEGAL DESCRIPTION OF LANDS WATER IS USED ON

4. LEGAL DESCRIPTION OF LANDS ON WHICH THE WATER IS USED: Beg at a pt on W ln of R/W of N.P. Ry. 490 ft SE from inters with W ln of Sec th SE'ly al R/W 649.4 ft, th NE'ly 161.8 ft. th NW'ly par to W R/W ln 439.6 ft.

Th SW'ly 284.4 ft to beg also S .04 ac of the pt of E 102 ft of W 404 ft of SW¼ SW¼ lyg W of N.P. Ry. R/W also S 20 ft Bartlow St. Vac.

SECTION	TOWNSHIP N.	RANGE, (E. OR W.) W.M.	COUNTY
25	11	20	YAKIMA

(ATTACH SEPARATE SHEET IF NECESSARY)

ARE YOU THE LEGAL OWNER OF THE ABOVE DESCRIBED LANDS ☒ YES ☐ NO
IF NO, EXPLAIN YOUR INTEREST

REASONS FOR THE PROPOSED CHANGE: CHANGE PURPOSE FOR MUNICIPAL USE

A MINIMUM FEE OF $10.00 MUST ACCOMPANY THIS APPLICATION

CONTINUE ON REVERSE SIDE

CHANGE

ECY 040 1-87
Rev 1/85 OX A 209
3

4. **CHANGE REQUESTED**

CHANGE WATER USE TO	TIME OF USE	GALLONS PER MINUTE OR CUBIC FEET PER SECOND
MUNICIPAL	SAME	SAME

5. **LOCATION OF PROPOSED POINT OF DIVERSION OR WITHDRAWAL**

ON ACCOMPANYING SECTION MAPS, ACCURATELY MARK AND IDENTIFY EACH POINT OF DIVERSION. SHOW NORTH-SOUTH AND EAST-WEST DISTANCES FROM NEAREST SECTION CORNER OR PROPERTY CORNER.

ALSO, ENTER BELOW THE DISTANCES FROM THE NEAREST SECTION OR PROPERTY CORNER TO THE DIVERSION OR WITHDRAWAL.

LOCATED WITHIN (SMALLEST LEGAL SUBDIVISION)	SECTION	TOWNSHIP N.	RANGE (E. OR W.) W.M.	COUNTY
SWNE				

IF THIS IS WITHIN THE LIMITS OF A RECORDED PLATTED PROPERTY, COMPLETE THIS SECTION

LOT	BLOCK	OF (GIVE NAME OF PLAT OR ADDITION)

ARE YOU THE OWNER OF THE LAND ON WHICH THE PROPOSED POINT OF DIVERSION OR WITHDRAWAL IS TO BE LOCATED

☐ YES ☐ NO

6. **LEGAL DESCRIPTION OF LANDS WATER IS TO BE USED ON**

CITY OF ZILLAH

SECTION	TOWNSHIP N.	RANGE, (E. OR W.) W.M.	COUNTY

(ATTACH SEPARATE SHEET IF NECESSARY)

ARE YOU THE LEGAL OWNER OF THE ABOVE DESCRIBED LANDS	IF NO, EXPLAIN YOUR INTEREST
☐ YES ☐ NO	

C.W Walker

APPLICANT'S SIGNATURE

DEPARTMENT OF E
WATER RIGHT CLAIM

WATER RIGHT CLAIM

DEC 15 71 09500

1 NAME Stokely-Van Camp, Inc.

ADDRESS P.O. Box 747

Zillah, Wa. ZIP CODE 98953

2 SOURCE FROM WHICH THE RIGHT TO TAKE AND MAKE USE OF WATER IS CLAIMED: Ground (SURFACE OR GROUND WATER)

W.R.I.A. 37 (LEAVE BLANK)

A. IF GROUND WATER, THE SOURCE IS Well

B. IF SURFACE WATER, THE SOURCE IS _____

3 THE QUANTITIES OF WATER AND TIMES OF USE CLAIMED:

A. QUANTITY OF WATER CLAIMED 1400 gallons per min. PRESENTLY USED 700 gallons per min. (CUBIC FEET PER SECOND OR GALLONS PER MINUTE)

B. ANNUAL QUANTITY CLAIMED 2,250 acre feet PRESENTLY USED 1,125 acre feet (ACRE FEET PER YEAR)

C. IF FOR IRRIGATION, ACRES CLAIMED -0- PRESENTLY IRRIGATED -0-

D. TIME(S) DURING EACH YEAR WHEN WATER IS USED. Entire year

4 DATE OF FIRST PUTTING WATER TO USE MONTH September YEAR 1942

5. LOCATION OF THE POINT(S) OF DIVERSION/WITHDRAWAL 610 FEET North AND 810 FEET East FROM THE Southwest CORNER OF SECTION 25

BEING WITHIN SW¼ of SW¼ OF SECTION 25 T 11 N., R. 20 E (E.OR W.) W.M.

IF THIS IS WITHIN THE LIMITS OF A RECORDED PLATTED PROPERTY, LOT _____ BLOCK _____ OF _____ (GIVE NAME OF PLAT OR ADDITION)

6. LEGAL DESCRIPTION OF LANDS ON WHICH THE WATER IS USED. Beg at a pt on N ln of R-W of N.P. Ry. 490 ft SE from inters with W ln of Sec th SE'ly al R-W 649.4 ft, th NE'ly 161.8 ft. th NW'ly par to N R-W ln 439.6 ft.

Th SW'ly 244.4 ft to beg also S .04 ac of the pt of E 102 ft of W 404 ft of SW¼ SW¼ ly N of N.P. Ry. R-W also S 20 ft Bartley St. Vac.

COUNTY Yakima

7. PURPOSE(S) FOR WHICH WATER IS USED: Industrial - Food Processing

8. THE LEGAL DOCTRINE(S) UPON WHICH THE RIGHT OF CLAIM IS BASED. Appropriation

DO NOT USE THIS SPACE

OF CLAIM DOES NOT CONSTITUTE AN ADJUDICATION TO USE OF WATERS AS BETWEEN THE WATER USE AS BETWEEN ONE OR MORE WATER USE CLAIMANTS ACKNOWLEDGEMENT CONSTITUTES RECEIPT FOR

REGISTRY NO.

I HEREBY SWEAR THAT THE ABOVE INFORMATION IS TRUE AND ACCURATE TO THE BEST OF MY KNOWLEDGE AND BELIEF

X Dallas Anderson

DATE December 14, 1971

IF CLAIM FILED BY DESIGNATED REPRESENTATIVE, PRINT OR TYPE FULL NAME AND MAILING ADDRESS OF AGENT BELOW.

DALLAS ANDERSON

P. O. Box 747, Zillah, Wa. 98953

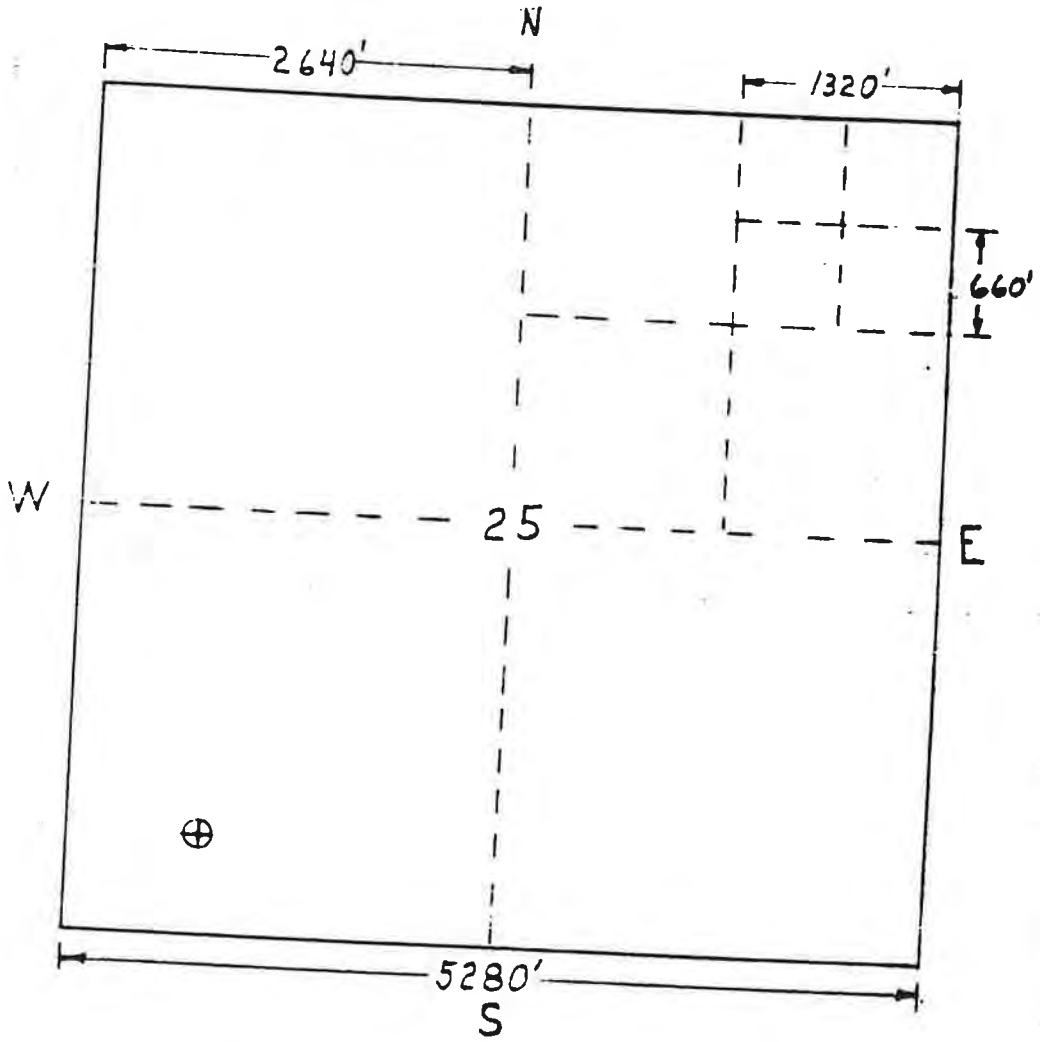

WELL LOCATION - 610 feet north and 810 feet east of the southwest corner of section 25, T11N, R20 EWM.
Being within the SW¼ SW¼ of said section.

WATER RIGHTS – 3RD AVENUE WELL AND WIPPCO WELL

STATE OF WASHINGTON
DEPARTMENT OF ECOLOGY

PERMIT

TO APPROPRIATE PUBLIC WATERS OF THE STATE OF WASHINGTON

☐ Surface Water (Issued in accordance with the provisions of Chapter 117, Laws of Washington for 1917, and amendments thereto, and the rules and regulations of the Department of Ecology.)

☒ Ground Water (Issued in accordance with the provisions of Chapter 263, Laws of Washington for 1945, and amendments thereto, and the rules and regulations of the Department of Ecology.)

PRIORITY DATE	APPLICATION NUMBER	PERMIT NUMBER	CERTIFICATE NUMBER
February 28, 1988	G4-29702	G4-29702P	

NAME
City of Zillah

ADDRESS (STREET)	(CITY)	(STATE)	(ZIP CODE)
P.O. Box 475	Zillah,	Washington	98953

The applicant is, pursuant to the Report of Examination which has been accepted by the applicant, hereby granted a permit to appropriate the following described public waters of the State of Washington, subject to existing rights and to the limitations and provisions set out herein

PUBLIC WATER TO BE APPROPRIATED

SOURCE
Two wells

TRIBUTARY OF (IF SURFACE WATERS)

MAXIMUM CUBIC FEET PER SECOND	MAXIMUM GALLONS PER MINUTE	MAXIMUM ACRE-FEET PER YEAR
	2000	1458.1

QUANTITY, TYPE OF USE, PERIOD OF USE
858.1 acre-feet per year for a continuous municipal and industrial supply;

600 acre-feet per year for the irrigation of 150 acres from April 1 to October 31

LOCATION OF DIVERSION/WITHDRAWAL

APPROXIMATE LOCATION OF DIVERSION—WITHDRAWAL
#1: 610 feet north and 810 feet east from the southwest corner of Section 25;

#2: 1200 feet east and 100 feet north from the south quarter corner of Section 25

LOCATED WITHIN (SMALLEST LEGAL SUBDIVISION)	SECTION	TOWNSHIP N.	RANGE, IE. OR W.I W.M.	W.R.I.A.	COUNTY
#1: $SW\frac{1}{4}SW\frac{1}{4}$ #2: $SW\frac{1}{4}SE\frac{1}{4}$	25	11	20 E	37	Yakima

RECORDED PLATTED PROPERTY

LOT	BLOCK	OF (GIVE NAME OF PLAT OR ADDITION)

LEGAL DESCRIPTION OF PROPERTY ON WHICH WATER IS TO BE USED

City of Zillah's Sub-Area Service Plan which includes Sections 25 and 26 of T. 11 N., R. 20 E.W.M.; the $W\frac{1}{2}$ of Section 31, T. 11 N., R. 21 E.W.M.; and that portion of the $W\frac{1}{2}$ of Section 30, T. 11 N., R. 21 E.W.M. lying west of Highway No. 410 (Yakima Valley Highway).

DESCRIPTION OF PROPOSED WORKS

Two wells - #1 approximately 800 feet deep with 40 horsepower turbine pump, #2 12-inch diameter and 950 feet deep with 25 horsepower turbine pump; 75,000 and 750,000 gallon storage reservoirs; sprinkler irrigation systems.

DEVELOPMENT SCHEDULE

BEGIN PROJECT BY THIS DATE	COMPLETE PROJECT BY THIS DATE	WATER PUT TO FULL USE BY THIS DATE
Begun	January 1, 2000	January 1, 2001

PROVISIONS

Installation and maintenance of an access port as described in Ground Water Bulletin No. 1 is required. An air line and gage may be installed in addition to the access port.

All water wells constructed within the state shall meet the minimum standards for construction and maintenance as provided under RCW 18.104 (Washington Water Well Construction Act of 1971) and Chapter 173-160 WAC (Minimum Standards for Construction and Maintenance of Water Wells).

The portion of this authorization relating to irrigation is classified as a PUBLICLY OWNED LAND PERMIT in accordance with Chapter 90.66 (Initiative Measure No. 59).

The combined withdrawal between Ground Water Certificates No. 606-D and No. 3350-A, the approved certificate of change for Water Right Claim No. 007086, and this right shall not exceed 2,550 gallons per minute and 1,458.1 acre-feet per year.

As the water will not be put to full beneficial use until the population has increased toward the proposed 4,000 and industry has developed further, the final certificate will not be issued until after the beginning of the year 2000. The annual quantity of water authorized on the certificate will reflect the actual development that has taken place.

This permit shall be subject to cancellation should the permittee fail to comply with the above development schedule and/or fail to give notice to the Department of Ecology on forms provided by that Department documenting such compliance.

Given under my hand and the seal of this office at Yakima, *Washington, this* 16th *day of* February, *19* 89.

Department of Ecology

by Doug Clausing
DOUG CLAUSING, SECTION SUPERVISOR

ENGINEERING DATA
OK dlf
23x27 ska

STATE OF WASHINGTON
DEPARTMENT OF ECOLOGY

REPORT OF EXAMINATION
TO APPROPRIATE PUBLIC WATERS OF THE STATE OF WASHINGTON

☐ Surface Water (Issued in accordance with the provisions of Chapter 117, Laws of Washington for 1917, and amendments thereto, and the rules and regulations of the Department of Ecology.)

☒ Ground Water (Issued in accordance with the provisions of Chapter 263, Laws of Washington for 1945, and amendments thereto, and the rules and regulations of the Department of Ecology.)

PRIORITY DATE	APPLICATION NUMBER	PERMIT NUMBER	CERTIFICATE NUMBER
February 28, 1988	G4-29702		

NAME
City of Zillah

ADDRESS (STREET)	(CITY)	(STATE)	(ZIP CODE)
P.O. Box 475	Zillah,	Washington	98953

PUBLIC WATERS TO BE APPROPRIATED

SOURCE
Two wells

TRIBUTARY OF (IF SURFACE WATERS)

MAXIMUM CUBIC FEET PER SECOND	MAXIMUM GALLONS PER MINUTE	MAXIMUM ACRE-FEET PER YEAR
	2000	1458.1

QUANTITY, TYPE OF USE, PERIOD OF USE
858.1 acre-feet per year for a continuous municipal and industrial supply;

600 acre-feet per year for the irrigation of 150 acres from April 1 to October 31

LOCATION OF DIVERSION/WITHDRAWAL

APPROXIMATE LOCATION OF DIVERSION—WITHDRAWAL
#1: 610 feet north and 810 feet east from the southwest corner of Section 25; → Wippco well

#2: 1200 feet east and 100 feet north from the south quarter corner of Section 25 ↖ 3rd Ave well (well No. 2)

LOCATED WITHIN (SMALLEST LEGAL SUBDIVISION)	SECTION	TOWNSHIP N.	RANGE (E. OR W.) W.M.	W.R.I.A.	COUNTY
#1: SW¼SW¼ #2: SW¼SE¼	25	11	20 E	37	Yakima

RECORDED PLATTED PROPERTY

LOT	BLOCK	OF (GIVE NAME OF PLAT OR ADDITION)

LEGAL DESCRIPTION OF PROPERTY ON WHICH WATER IS TO BE USED

City of Zillah's Sub-Area Service Plan which includes Sections 25 and 26 of T. 11 N., R. 20 E.W.M.; the W½ of Section 31, T. 11 N., R. 21 E.W.M.; and that portion of the W½ of Section 30, T. 11 N., R. 21 E.W.M. lying west of Highway No. 410 (Yakima Valley Highway).

DESCRIPTION OF PROPOSED WORKS

Two wells - #1 approximately 800 feet deep with 40 horsepower turbine pump, #2 12-inch diameter and 950 feet deep with 25 horsepower turbine pump; 75,000 and 750,000 gallon storage reservoirs; sprinkler irrigation systems.

DEVELOPMENT SCHEDULE

BEGIN PROJECT BY THIS DATE:	COMPLETE PROJECT BY THIS DATE:	WATER PUT TO FULL USE BY THIS DATE:
Begun	January 1, 2000	January 1, 2001

REPORT

Background

On February 28, 1988, the City of Zillah filed an application to appropriate public ground waters. The application was accepted, assigned number G4-29702, and public notice was made. The 30-day protest period expired with no protests being received.

Investigation

A field inspection was conducted by the author on February 2, 1988 in conjunction with an application for change of Water Right Claim No. 007086 filed by the City of Zillah. Based on this inspection, conversations with various city officials including Mrs. Althea Spencer, the City Clerk and Mr. Curtis W. Walker, Public Water District, and a review of WDOE office records, the following data were collected:

The applicant has requested the withdrawal of 2,000 gallons per minute (gpm) from three existing wells for a continuous municipal and industrial supply and for the irrigation of 150 acres. The water will be used in accordance with the proposed sub-area service plan developed by the City of Zillah which includes serving land outside the current city limits. This expanded service area includes Sections 25 and 26 of T. 11 N., R. 20 E.W.M. and those portions of the W1/2 of Sections 30 and 31 of T. 11 N., R. 21 E.W.M. lying west of Highway 410 (Yakima Valley Highway).

The City of Zillah was currently the holder of five water right certificates and an approved change on a water right claim. These are described below:

Water Right Claim No. 007086 was filed on December 14, 1971 by Dallas Anderson for Stokely-Van Camp, Inc. It claims the withdrawal of 1,400 gallons per minute (gpm), 2,250 acre-feet per year for a continuous industrial food processing supply with the date of first use being September, 1942. The claim states that 700 gpm and 1,125 acre-feet per year were currently being withdrawn. The well was listed as being located approximately 610 feet north and 810 feet east from the southwest corner of Section 25, being within the SW1/4 SW1/4 of Section 25, T. 11 N., R. 20 E.W.M. The claimed place of use was described as being the following:

Beginning at a point on the northern line of the right-of-way for the Northern Pacific Railroad located 490 feet southeast from the intersection with the western line of Section 25, T. 11 N., R. 20 E.W.M.; thence southeasterly along said right-of-way 649.4 feet; thence northeasterly 161.8 feet; thence northwesterly parallel to the northern right-of-way line 439.6 feet; thence southwesterly 244.4 feet to the point of beginning. Also the southern 0.04 acre of that portion of the eastern 102 feet of the western 404 feet of the SW1/4 SW1/4 of said section lying north of the Northern-Pacific Railroad right-of-way. Also the southern 20 feet of Bartley Street vacated.

Prior to ownership by Stokely-Van Camp, Inc., the property was owned by Big Y Fruit. The exact age of the well is unknown, however, it is believed to have been drilled when the property was owned by Big Y Fruit. No well report is available for the well, however, it is believed to be approximately 800 feet deep. A 75-horsepower turbine pump had been installed in the well when it was operated by Stokely-Van Camp, Inc. When the fruit processing plant closed, the well, with water right claim, was sold to the City of Zillah by Wippco who owned it from 1978 to 1980. During Wippco ownership, a 40-horsepower turbine pump was installed in the well to increase efficiency. In early 1988, a well house was constructed by the city.

The City of Zillah filed an application for change requesting the purpose of use for Water Right Claim No. 007086 be changed to continuous municipal supply and that the place of use be changed to the Zillah City Limits. This application has been recommended for approval. An instantaneous quantity of 700 gpm and a maximum annual quantity of 858.1 acre-feet per year has been recommended for the certificate of change which will be issued after the year 2000. This well is known as the Wippco Well (Well No. 3) in the city records.

Certificate of Ground Water Right No. 605-D (with a 1910 priority date) authorizes the withdrawal of 50 gpm, 80 acre-feet per year for a municipal and industrial supply to be used within the Town of Zillah. It is located within Lot 5 of Block 4 of Jaeger's Addition to Zillah, Washington. The well is a 6-inch diameter well that was drilled to a depth of 167 feet. In 1940, the static water level was determined to be 116 feet below land surface with a dynamic water level of 130 feet below land surface. The well, equipped with a five horsepower pump, was capable of producing 50 gpm. This well has been abandoned since prior to 1958.

Certificate of Ground Water Right No. 606-D (with a 1908 priority date) authorizes the withdrawal of 276 gpm, 150 acre-feet per year for a municipal and industrial supply to be used within the Town of Zillah. The well is located within the E1/2 SW1/4 SE1/4 of Section 25, T. 11 N., R. 20 E.W.M. The location can be more specifically described as being approximately 1,200 feet east and 100 feet north of the south quarter corner of said Section 25. The well is a 12-inch diameter well that is drilled to a depth of 950 feet. Based on the geological formations expected to be present at the well site, it is likely this well penetrates and derives water from the Saddle Mountains Basalt Formation. In 1940, the static water level was measured to be 116 feet below land surface and the dynamic water level was 276 feet below land surface. The well, equipped with a 25-horsepower turbine pump was capable of producing 250 gpm. This well is located near one of the city reservoirs and is still used as one of the production wells for the city. It is known as the 3rd Ave Well (Well No. 2) in the city records.

Certificate of Ground Water Right No. 607-D (with a priority date of 1908) authorizes the withdrawal of 150 gpm, 10 acre-feet per year for a domestic supply and for fire protection within the Town of Zillah. The well is located within Lot 5 of Block 4 of Jaeger's First Addition to Zillah. It is an 8-inch diameter well that is drilled to a depth of 160 feet. The static water level was determined to be 116 feet below land surface and the dynamic water level to be 120 feet below land surface in 1940. With a 15-horsepower pump installed in the well, the capacity was 150 gpm. This well was used as a backup well since continuous pumping resulted in sanding problems. Prior to 1958, it was abandoned.

With a priority date of May 14, 1952, Ground Water Certificate No. 1277-A was issued to the Water Department of the Town of Zillah authorizing the withdrawal of 250 gpm, 146 acre-feet per year for a municipal supply for the Town. The well, which is located within the NE1/4 NW1/4 NE1/4 of Section 36, T. 11 N., R. 20 E.W.M., is a 280-foot deep well that is cased with 10-inch casing to a depth of 92 feet and with 8-inch casing from 92 to 268 feet below land surface. The casing is perforated from 248 to 266 feet below land surface. There is no well report for the original well, which was only 170 feet deep. When the well was deepened, it penetrated cemented gravel, sand and clay, cemented gravel, clay, and terminates in gravel and sand. The static water level was measured to be 112 feet below land surface in 1952 and the dynamic water level was 127 feet below land surface. A 15-horsepower turbine pump was installed in the well. This well served as a backup well but has since been abandoned.

The final right is Ground Water Certificate No. 3350-A with a priority date of July 9, 1958. It authorizes the withdrawal of 550 gpm, 296 acre-feet per year for a municipal supply for the Town of Zillah. The well is located within the NE1/4 NW1/4 NE1/4 of Section 36, T. 11 N., R. 20 E.W.M. The location can be more specifically described as being approximately 400 feet east and 200 feet south of the north quarter corner of said Section 36. The well is a 12-inch diameter well that is drilled to a depth of 280 feet and cased to 242 feet. The casing is perforated from 238.2 to 279.8 feet below land surface. It penetrates soil, hardpan, clay, sand and gravel, cemented gravel, sand and gravel, and terminates in a sand, gravel, and silt mixture. Water is derived from the unconfined sediments of the Ellensburg Formation. The static water level was measured to be 109 feet below land surface and the dynamic water level was 110 feet below land surface. This well has served as the primary source for the City with a current capacity of 650 gpm. It is known as the Rainier Ave Well (Well No. 1) in the city records.

Since the wells authorized under Ground Water Certificates No. 605-D, No. 607-D, and No. 1277-A have been abandoned, these three certificates have been relinquished. The city has requested assistance in determining proper abandonment of these wells. Based on the status of the remaining wells and the rights associated with them, the City is authorized to withdraw a total of 1089 gpm and 446 acre-feet per year under Ground Water Certificates No. 606-D and No. 3350-A. The City has two water storage reservoirs. One has a capacity of 75,000 gallons and the other has a capacity of 750,000 gallons.

The current population of the City of Zillah is 1,838 people. From November 1, 1987 to October 31, 1988, the City supplied 394.3 acre-feet of water to metered customers. Based on this annual water consumption and the current population, the per capita consumption rate for the City is currently 0.22 acre-foot per year per person. Since the City estimates the population may approach 4,000 people by the year 2000 and significant changes in water consumption are not anticipated, the annual water requirement would approach 858.1 acre-feet per year by the year 2000. This figure represents an annual consumption of 412.1 acre-feet per year more than was authorized under Ground Water Certificates 606-D and No. 3350-A. The well claimed under Water Right Claim No. 007086 was approved, in the change of this claim, as the primary source for the additional 412.1 acre-feet per year.

The City also irrigates the lawn and landscaping associated with the city parks and cemetery. The water used for this purpose is not included in the metered water records and is, therefore, in addition to the annual consumption discussed above. The total area to be irrigated using city water will not exceed 150 acres. The maximum annual water requirement for irrigation in this area is 4 acre-feet per year per acre irrigated.

The three wells requested for approval for the instant right are those authorized individually under Ground Water Certificates No. 606-D (3rd Ave Well) and No. 3350-A (Rainier Ave Well) and under Water Right Claim No. 007086 (Wippco Well). The well authorized under Ground Water Certificate No. 3350-A derives water from the Ellensburg Formation while the remaining two wells derive water from the Saddle Mountains Basalt Formation. Since a water right defines a specific use of water from a specific aquifer, all three wells cannot be authorized under the same water right. The two Saddle Mountains Basalt Formation wells may be authorized under the same right while the Ellensburg Formation well will require a separate right. Mrs. Spencer has indicated that the City would prefer the instant right authorize the two Saddle Mountains Basalt Formation aquifer wells. A new application has been submitted requesting approval for the use of the Ellensburg Formation aquifer well for the same uses.

Based on the potential for expanded instantaneous production from their two wells (the Wippco Well is capable of pumping at least 1400 gpm), the instant application will be recommended for the approval of the requested 2,000 gpm. The new application has requested an expanded capacity of 1,600 gpm for the third well. The final certificate for the instant right will issue authorizing the actual capacity of the two wells at that time, up to the approved 2,000 gpm.

There are four ground water certificates on record within a three-quarter mile radius of the city's three wells. All these wells are at the same approximate elevation as the city's wells. It is likely they all derive water from the unconfined sediments of the Ellensburg Formation. Ground Water Certificate No. 533-D was issued to the Northern Pacific Railway Company authorizing the withdrawal of 65 gpm, 32.2 acre-feet per year for a water supply for locomotives. The well is located within the NE1/4 NW1/4 of Section 36, T. 11 N., R. 20 E.W.M. and the water was to be used at the station grounds of the Northern Pacific Railway Company in Zillah. The well is described as a 6-inch diameter well that is 145 feet deep, however, no well report is available. This well is located approximately 1,600 feet southeast of the applicant's well sites. The property was purchased by the City of Zillah with hopes of utilizing the well to supplement the city's water supply. Due to the presence of debris in the well which would be too costly to remove, the well was abandoned. The city will relinquish Ground Water Certificate No. 533-D since it is no longer exercised.

Ground Water Certificate No. G4-23170C was issued to Douglas Merke for a well located approximately 880 feet west and 760 feet north from the center of Section 25, being within the W1/2 SE1/4 NW1/4 of Section 25, T. 11 N., R. 20 E.W.M. It authorizes the withdrawal of 19 gpm, 17 acre-feet per year for a domestic supply and for the supplemental irrigation

of 3 acres located within the E1/2 SW1/4 SE1/4 NW1/4 and the NW1/4 SE1/4 NW1/4 of Section 25, T. 11 N., R. 20 E.W.M. Primary irrigation water is obtained through the Sunnyside Valley Irrigation District. The well is a 6-inch diameter, 128-foot deep well that is cased to 126 feet. It penetrates soil, sand, cemented gravel, sand, clay, sandstone, and terminates in a sand and gravel mixture that is water bearing. The static water level was 16 feet below land surface when the well was completed in 1974. This well is located approximately 2,900 feet north-northeast of the instant well sites.

Two wells are authorized under Ground Water Certificate No. G4-23743C which was issued to James R. Wyn. Both wells are located within the NE1/4 SE1/4 of Section 26, T. 11 N., R. 20 E.W.M. Well No. 1 is more specifically located approximately 280 feet west and 700 feet south from the east quarter corner of Section 26 while Well No. 2 is located approximately 500 feet west and 1,250 feet south from the same east quarter corner. This certificate authorizes the withdrawal of 300 gpm, 151 acre-feet per year for a domestic supply and for the irrigation of 28 acres located within a portion of the E1/2 SE1/4 of Section 26, T. 11 N., R. 20 E.W.M. There is no information available regarding the construction of the wells. These wells are located approximately 1,900 feet northwest of the applicant's well sites.

The final certificate is Ground Water Certificate No. G4-27362C. It was issued to Harriet Clark authorizing the withdrawal of 10 gpm, 5.3 acre-feet per year for stock water and for the irrigation of 1 acre located within the SW1/4 SW1/4 SE1/4 of Section 25, T. 11 N., R. 20 E.W.M. The well is located approximately 200 feet north and 100 feet east from the south quarter corner of Section 25, T. 11 N., R. 20 E.W.M. Although no well report is available, the well is believed to be 62 feet deep. This well is located about 2,200 feet east-northeast of the applicant's wells.

There are 16 domestic wells on record within a mile radius of the applicant's well sites. They range in depth from 60 to 208 feet with the mean depth of 139.3 feet.

Conclusions

Based on these data, the following conclusions are drawn:

Water is available for the proposed beneficial use. Due to the distance from neighboring wells within the same aquifer, there should be no impairment of existing rights. Granting a permit is not contrary to the public interest.

Recommendations

It is recommended that an instantaneous quantity of 2,000 gpm and an annual quantity of 1,458.1 acre-feet per year from two wells be approved for a continuous municipal and industrial supply and for the irrigation of 150 acres from April 1 to October 31.

Installation and maintenance of an access port as described in Ground Water Bulletin No. 1 is required. An air line and gage may be installed in addition to the access port.

All water wells constructed within the state shall meet the minimum standards for construction and maintenance as provided under RCW 18.104 (Washington Water Well Construction Act of 1971) and Chapter 173-160 WAC (Minimum Standards for Construction and Maintenance of Water Wells).

The portion of this authorization relating to irrigation is classified as a PUBLICLY OWNED LAND PERMIT in accordance with Chapter 90.66 (Initiative Measure No. 59).

The combined withdrawal between Ground Water Certificates No. 606-D and No. 3350-A, the approved certificate of change for Water Right Claim No. 007086, and this right shall not exceed 2,550 gallons per minute and 1,458.1 acre-feet per year.

Since the applicant has abandoned the well authorized under Ground Water Certificate No. 533-D, and water is no longer withdrawn for locomotive water supply, they are advised to relinquish this right and to properly abandon the well along with the other city wells that have been abandoned.

As the water will not be put to full beneficial use until the population has increased toward the proposed 4,000 and industry has developed further, the final certificate will not be issued until after the beginning of the year 2000. The annual quantity of water authorized on the certificate will reflect the actual development that has taken place.

REPORT BY: Darlene M. Frye
Darlene M. Frye

DATE: December 21, 1988

APPROVED BY: Doug Clausing
Doug Clausing, Regional Supervisor

DATE: 12/21/1988

ska
23x27

WATER RIGHTS – SUPERSEDING PERMIT G4-29702P

STATE OF WASHINGTON
DEPARTMENT OF ECOLOGY
15 W Yakima Ave, Ste 200 • Yakima, WA 98902-3452 • (509) 575-2490

RECEIVED
SEP 24 2014
BY:

September 22, 2014

Tom Tilley
City of Zillah
PO Box 475
Zillah WA 98953-0475

Re: Water Right No. G4-29702P

Dear Mr. Tilley:

In response to the city's request, an extension is hereby granted to put the water to full beneficial use for the reason(s) below:

As described in the Huibregtse, Louman Associates letter of August 19, 2014, and the draft City of Zillah Water system Plan (August 2014), you have shown good cause and due diligence by:

- Taking steps to address the deficiencies in the 3rd Avenue Well (S02) and restore it to its full capacity
- Taking steps to upgrade and repair the WIPPCU Well (S03) to ensure reliable water production.

The new deadline to submit your *Proof of Appropriation of Water* is **July 31, 2021.**

YOUR RIGHT TO APPEAL

You have a right to appeal this decision to the Pollution Control Hearing Board (PCHB) within 30 days of the date of receipt of this decision. The appeal process is governed by Chapter 43.21B RCW and Chapter 371-08 WAC. "Date of receipt" is defined in RCW 43.21B.001(2).

To appeal you must do the following within 30 days of the date of receipt of this decision:

- File your appeal and a copy of this decision with the PCHB (see addresses below). Filing means actual receipt by the PCHB during regular business hours.
- Serve a copy of your appeal and this decision on Ecology in paper form - by mail or in person. (See addresses below.) E-mail is not accepted.

You must also comply with other applicable requirements in Chapter 43.21B RCW and Chapter 371-08 WAC.

ADDRESS AND LOCATION INFORMATION

Street Addresses	Mailing Addresses
Department of Ecology Attn: Appeals Processing Desk 300 Desmond Drive SE Lacey WA 98503	**Department of Ecology** Attn: Appeals Processing Desk PO Box 47608 Olympia WA 98504-7608
Pollution Control Hearings Board 1111 Israel Road SW Ste 301 Tumwater WA 98501	**Pollution Control Hearings Board** PO Box 40903 Olympia WA 98504-0903

For additional information visit the Environmental Hearings Office Website: http://www.eho.wa.gov
To find laws and agency rules visit the Washington State Legislature Website: http://www.leg.wa.gov/CodeReviser

If you have any questions, please contact Teresa Mitchell at 509-575-2597.

Sincerely,

Robert F. Barwin
Acting Section Manager
Water Resources Program

RFB:DH:HD
140911

Enclosures: *Proof of Appropriation of Water*
Your Right to Be Heard

By certified mail: 7010 0290 0000 7131 2443

STATE OF WASHINGTON
DEPARTMENT OF ECOLOGY
15 W Yakima Ave, Ste 200 • Yakima, WA 98902-3452 • (509) 575-2490

RECEIVED
MAY 1 2 2008
Huibregtse Louman Associates, Inc.

May 9, 2008
CERTIFIED MAIL
[7006 0100 0002 8191 4142]

City of Zillah
Tim Tilley
PO Box 475
Zillah WA 98953

Re: City of Zillah Water Right No. G4-29702P

A written request dated January 29, 2008, was submitted to the Department of Ecology (Ecology) by Huibregtse, Louman Associates, Inc., on behalf of the City of Zillah (the City). The request asked Ecology to do research and make an aquifer designation for the wells for Ground Water Permit No. G4-29702P. The Technical Unit of the Central Region Office, Department of Ecology, investigated records for the City's wells and determined they were drilled into the Ellensburg Formation aquifer. A Superseding Permit is being issued to reflect the correct information.

A separate written correspondence from the City, dated January 22, 2008, was submitted requesting an extension on the permit. This request is being dealt with by means of the Superseding Permit. There is an updated development schedule giving additional time to put the water to full beneficial use. The date set by the Superseding Permit is **December 31, 2013**, (six years) in conjunction with when the next update of the City's Water System Plan is due.

Please read the enclosed information sheet, as well as your entire Superseding Permit. One of the new provisions is that any wells constructed under this permit must be completed into the Ellensburg Formation aquifer.

You have a right to appeal this order. To appeal this you must:

- File your appeal with the Pollution Control Hearing Board within 30 days of the "date of receipt" of this document. Filing means actual receipt by the Board during regular office hours.
- Serve your appeal on the Department of Ecology within 30 days of the "date of receipt" of this document. Service may be accomplished by any of the procedures identified in WAC 371-08-305(10). "Date of receipt" is defined at RCW 43.21B.001(2).

Be sure to do the following:

- Include a copy of this document that you are appealing with your Notice of Appeal.
- Serve and file your appeal in paper form; electronic copies are not accepted.

1. To file your appeal with the Pollution Control Hearings Board:

Mail appeal to:	OR	Deliver your appeal in person to:
Pollution Control Hearings Board PO Box 40903 Olympia WA 98504-0903		Pollution Control Hearings Board 4224 – 6th Ave SE Rowe Six, Bldg 2 Lacey WA 98503

2. To serve your appeal on the Department of Ecology:

Mail appeal to:	OR	Deliver your appeal in person to:
Department of Ecology Appeals Coordinator PO Box 47608 Olympia WA 98504-7608		Department of Ecology Appeals Coordinator 300 Desmond Dr SE Lacey WA 98503

3. And send a copy of your appeal packet to:

G. Thomas Tebb, L.E.G.
Department of Ecology
15 W Yakima Ave Ste 200
Yakima WA 98902-3452

For additional information visit the Environmental Hearings Office Website: http://www.eho.wa.gov
To find laws and agency rules visit the Washington State Legislature Website: http://www.leg.wa.gov/CodeReviser

Sincerely,
G Thomas Tebb, Water Resources Section Mgr
by Darrell Monroe
G. Thomas Tebb, L.E.G.
Section Manager
Water Resources Program
Central Region Office

GTT:RM:gg/080403

Enclosures: Your Right To Be Heard
Proof of Appropriation of Water
Important Information About Your Water Right

cc: Jeffrey T. Louman, Huibregtse, Louman Associates, Inc.
Justin Bellamy, EIT, Huibregtse, Louman Associates, Inc.

STATE OF WASHINGTON
DEPARTMENT OF ECOLOGY

SUPERSEDING PERMIT
TO APPROPRIATE PUBLIC WATERS OF THE STATE OF WASHINGTON
Supersedes Permit Issued February 16, 1989

☐ Surface Water (Issued in accordance with the provisions of Chapter 117, Laws of Washington for 1917, and amendments thereto, and the rules and regulations of the Department of Ecology.)

☒ Ground Water (Issued in accordance with the provisions of Chapter 263, Laws of Washington for 1945, and amendments thereto, and the rules and regulations of the Department of Ecology.)

PRIORITY DATE	APPLICATION NUMBER	PERMIT NUMBER	CERTIFICATE NUMBER
February 28, 1988	G4-29702	G4-29702P	

NAME
City of Zillah

ADDRESS (STREET)	(CITY)	(STATE)	(ZIP CODE)
P.O. Box 475	Zillah	Washington	98953

The applicant is hereby granted a permit to appropriate the following public waters of the State of Washington, subject to existing rights and to the limitations and provisions set out herein.

PUBLIC WATERS TO BE APPROPRIATED

SOURCE
Two Wells
#1: a.k.a. City #3, a.k.a. Wippco Well
#2: a.k.a. City #2, a.k.a. 3rd Avenue Well
TRIBUTARY OF (IF SURFACE WATERS)

MAXIMUM CUBIC FEET PER SECOND	MAXIMUM GALLONS PER MINUTE	MAXIMUM ACRE-FEET PER YEAR
	2000	1458.1

QUANTITY, TYPE OF USE, PERIOD OF USE
858.1 acre-feet per year for a continuous municipal and industrial supply;
600 acre-feet per year for the irrigation of 150 acres from April 1 to October 31.

LOCATION OF DIVERSION/WITHDRAWAL

APPROXIMATE LOCATION OF DIVERSION--WITHDRAWAL

#1: a.k.a. City #3, a.k.a. Wippco Well, 610 feet north and 810 feet east from the southwest corner of Section 25;
#2: a.k.a. City #2, a.k.a. 3rd Avenue Well, 1200 feet east and 100 feet north from the south quarter corner of Section 25.

LOCATED WITHIN (SMALLEST LEGAL SUBDIVISION)	SECTION	TOWNSHIP N.	RANGE, (E OR W) W.M.	W.R.I.A.	COUNTY
#1: a.k.a. City #3, a.k.a. Wippco Well: SW¼, SW¼ #2: a.k.a. City #2, a.k.a. 3rd Avenue Well: SW¼, SE¼	25	11	20 E W.M.	37	Yakima

RECORDED PLATTED PROPERTY

LOT	BLOCK	OF (GIVE NAME OF PLAT OR ADDITION)

LEGAL DESCRIPTION OF PROPERTY ON WHICH WATER IS TO BE USED

The place of use of this water right is the service area described in the most recent Water System Plan approved by the Washington State Department of Health, so long as City of Zillah is and remains in compliance with the criteria in RCW 90.03.386(2). RCW 90.03.386 may have the effect of revising the place of use of this water right.

COPY

DESCRIPTION OF PROPOSED WORKS

Two wells –
#1: a.k.a. City #3, a.k.a. Wippco Well, approximately 260 feet deep with 40 horsepower turbine pump,
#2: a.k.a. City #2, a.k.a. 3rd Avenue Well, 12 -inch diameter and 950 feet deep with 25 horsepower turbine pump;
75,000 and 750,000 gallon storage reservoirs: sprinkler irrigation systems

DEVELOPMENT SCHEDULE

BEGIN PROJECT BY THIS DATE	COMPLETE PROJECT BY THIS DATE	WATER PUT TO FULL USE BY THIS DATE
Begun	Complete	December 31, 2013

PROVISIONS

Any replacement or additional points of withdrawal constructed under Ground Water Permit No. G4-29702P shall be restricted to the Ellensburg Formation aquifer and be constructed with solid, un-perforated, un-screened casing to a minimum depth of 300 feet.

Installation and maintenance of an access port as described in WAC 173-160- 291(3) is required. An air line and gage may be installed to the access port.

All wells constructed in the state shall meet the construction requirements of WAC 173-160 titled "Minimum Standards for the Construction and Maintenance of Wells" and RCW 18.104 titled "Water Well Construction". Any well which is unusable, abandoned, or whose use has been permanently discontinued, or which is in such disrepair that its continued use is impractical or is an environmental, safety or public health hazard shall be decommissioned.

The portion of this authorization relating to irrigation is classified as a PUBLICLY OWNED LAND PERMIT in accordance with Chapter 90.66 (Initiative Measure No. 59).

The combined withdrawal between Ground Water Certificate Nos. 606-D and 3350-A, the approved certificate of change Water Right Claim No. 007086, and this right shall not exceed 2,550 gallons per minute and 1,458.1 acre-feet per year.

This permit shall be subject to cancellation should the permittee fail to comply with the above development schedule and/or to give notice to the Department of Ecology on forms provided by that Department documenting such compliance.

Given under my hand the seal of this office at Yakima, Washington, this 9th *day of* May *2008*

DATA REVIEW
OK

DEPARTMENT OF ECOLOGY STATE OF WASHINGTON

Department of Ecology
G Thomas Tebb, Water Resources Section Mgr
by Darrell J Monroe
G. Thomas Tebb, L.E.G.
Section Manager
Water Resources Program
Central Region Office

COPY

WATER RIGHTS – PERMIT G4-29702P AQUIFER DESIGNATION MEMORANDUM

M E M O R A N D U M

DATE: February 13, 2008

TO: Melissa Downes; File G4-29702P, City of Zillah

FROM: Anna Hoselton

RE: Review of Aquifer designation for ground water permit G4-29702P, City of Zillah. Written request for review on behalf of the City of Zillah submitted by Huibregtse, Louman Associates, Inc., dated January 29, 2008.

Review of file documents, well logs, geologic cross-sections, etc., was done in consideration of the City's questions: (1) what aquifer are the wells authorized under G4-29702 drilled into and (2) how this information affects the status of Ground water Permit G4-29702 and the associated development schedule.

Discussion of Issue 1

As issued in 1988, Permit G4-29702 implies the City of Zillah's 3rd Avenue well (well 2) and the Wippco well (well 3) were completed in and withdraw water from the Saddle Mountains aquifer.

Sometime after the permit issued, it was demonstrated by down hole video that the Wippco well, thought to be 800 feet deep, had either been filled in or had originally terminated at a depth of only 260 feet. Additionally in 1993, construction of the 1,507 ft deep George Joseph well approximately 1.2 miles northwest of the City wells, suggested that the 3rd Avenue well at 950 feet was more likely completed in and withdrawing water from the Ellensburg Formation aquifer than from the Saddle Mts aquifer.

Current evaluation of area geology, well logs, and extension of Ecology's South Flank Rattlesnake Ridge Cross-Section C-C' to include the George Joseph well and the existing city wells is clearly supportive towards City wells 2 and 3 being completed in and withdrawing water from the Ellensburg Formation.

It should be noted however that the Report of Exam for G4-29702P contains a sentence stating "Mrs. Spencer has indicated that the City would prefer the instant right authorize the two Saddle Mountains Basalt Formation aquifer wells." This may imply the City requested a permit for the Saddle Mts aquifer, however, it can easily be argued that Ecology had identified Wells 2 and 3 as Saddle Mts aquifer wells and that the City merely requested rights to wells 2 and 3, accepting Ecology's aquifer determination in the process.

The current request by the City seeks to correct the error and correctly identify and assign the Ellensburg Formation aquifer to the rights associated with ground water permit G4-29702P.

Discussion of Issue 2

Ecology apparently erred in its original aquifer identification or designation of the City of Zillah's 3rd Avenue (well 2) and Wippco (well 3) wells. ***An effect of this error would be to potentially nullify the original impairment analysis.***

The original impairment analysis did, however, inventory and consider water rights within ¾ mile radius, all of which are perfected within the Ellensburg Formation aquifer. The original analysis also identified 16 domestic wells, all of which range in depth from 60 to 208 feet and withdraw water from the Ellensburg Formation aquifer.

Since G4-29702P issued, no reports or complaints of well interference or impairing conditions have been received by Ecology regarding operations at the City of Zillah wells since G4-29702 issued. The absence of complaints suggest the City's pumping from the Ellensburg Formation aquifer has not had negative effects on neighboring well users. This is likely due to stratification of the aquifer and aquifer characteristics which result in drawdown cones that tend to be steep and narrow. The lack of noticeable negative effects is also likely related to the Ellensburg Formation aquifer's quick response to recharge being the uppermost aquifer. Another factor is likely a lack of need for wells within the City's water service area. Lastly, it should be noted that the majority of the existing Ellensburg Formation aquifer wells only penetrate about 30 % or less of the aquifer's available thickness.

Current review of the Ecology well log database, suggest that few domestic wells have been drilled since the report of exam issued. The few water wells that have been constructed since issuance of G4-29702P do not exceed 280 feet in depth. Area static water levels appear to be healthy and respond well to seasonal recharge. Static water levels taken at City wells 2 and 3 in January, 2008, were 53 and 140 feet, respectively; adjusted for elevation, they are 812 and 676 ft msl, respectively. The relatively high static water level at City well 2 is likely related to it being used only as a standby or backup well presently. The lower static water level at well 2 likely has a dynamic component due to recent pumping and possibly some composite drawdown due to City well 1 approximately 450 feet away.

Given the historic and current status of well densities, aquifer health and aquifer thickness, impairment of existing rights as a result of withdrawals currently being made from the Ellensburg Formation aquifer under G4-29702P is concluded to be unlikely.

Another potential effect of the error would be to require deepening of the authorized wells into the Saddle Mts aquifer under the current construction schedule. Conversely, it could also be argued that the city has met the intent of the authorization in G4-29702P and has effectively perfected this right into the Ellensburg Formation aquifer.

It is reasonably clear and convincing that Ecology erred in the original aquifer designation. It is also reasonably clear that the City's intention was to acquire rights for the Wippco and 3rd Avenue wells and that they relied on Ecology's aquifer designation.

As a result, the CRO Technical Unit respectfully requests that the files associated with G4-29702P be amended to reflect the following:

- City of Zillah well 2, the 3rd Avenue well, is constructed into and withdraws water from the Ellensburg Formation aquifer.

- City of Zillah well 3, the Wippco well, is constructed into and withdraws water from the Ellensburg Formation aquifer.

- Impairment of existing Ellensburg Formation aquifer rights, as a result of withdrawals authorized under G4-29702P is concluded to be unlikely.

- As constructed, existing City well 2 and 3, reasonably meet construction requirements for wells developed into the Ellensburg Formation aquifer.

  - ✓ City well 2, the 3rd Avenue well, was shown to be cased to at least 500 feet by down hole video in 1994 as indicated in the City of Zillah, August 2000, Water Right Study.
  - ✓ City well 3, the Wippco well, appears to be cased to a depth of 260 feet. The well may be perforated in places, however, encrustation of the casing made precluded confident identification from the City's 1994 down hole video.

- Any replacement or additional points of withdrawal constructed under ground water permit G4-29702P shall be restricted to the Ellensburg Formation aquifer and be constructed with solid, un-perforated, un-screened casing to a minimum depth of 300 feet.



2/19/2008

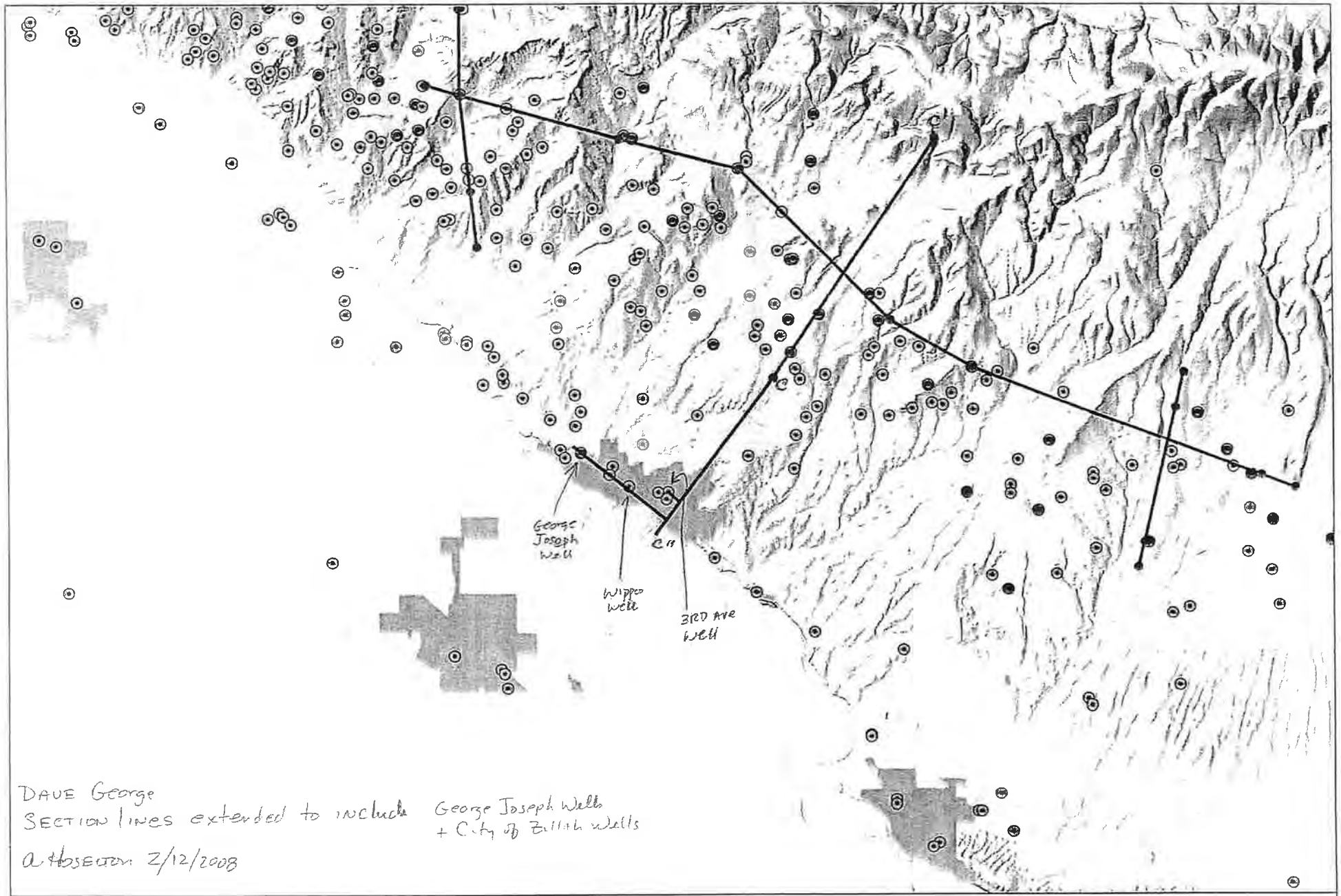

ArcView Quick Map

4167 0 4167 8334 Feet

1:100000

N

Map p 2/11/2008

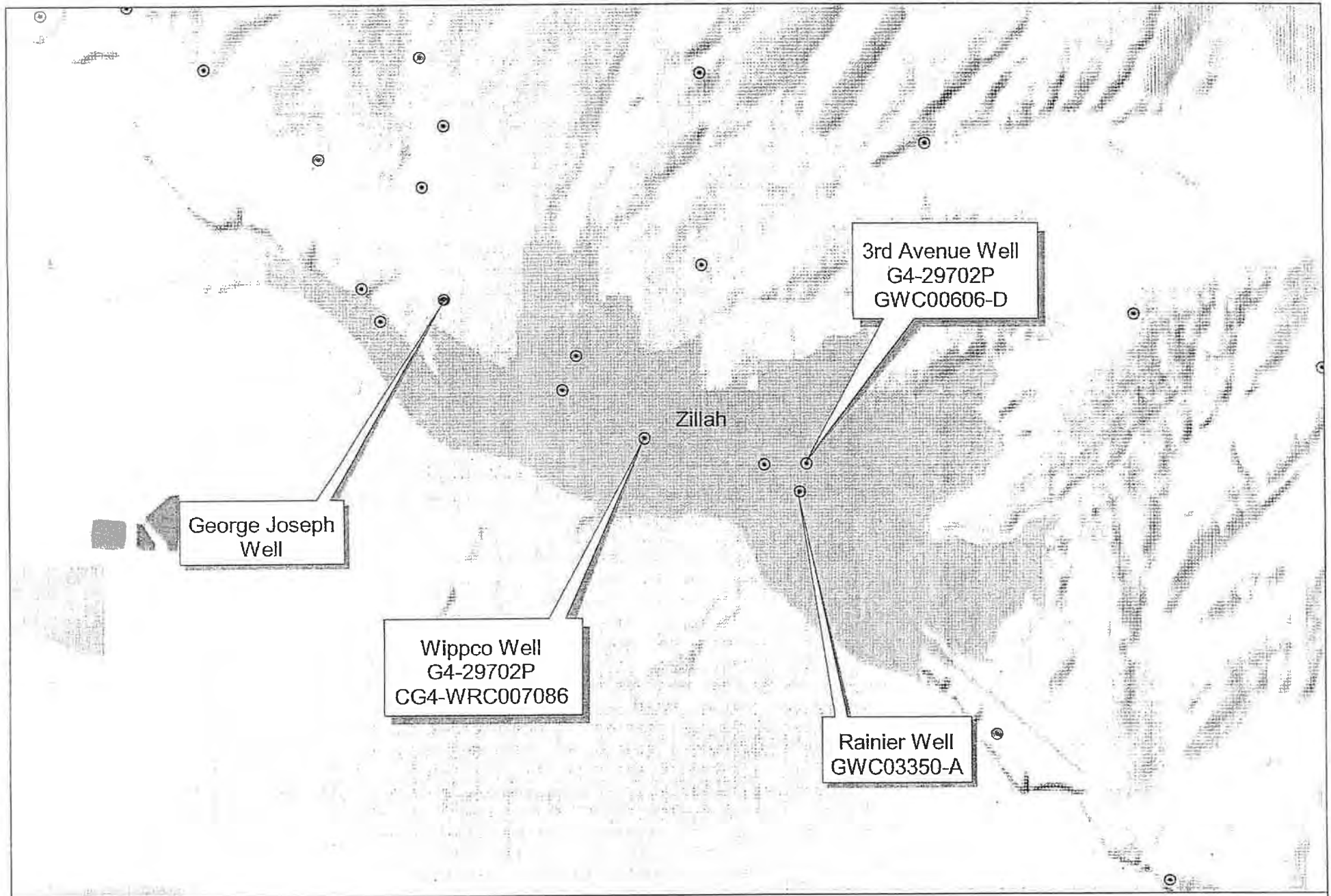

ArcView Quick Map

1000 0 1000 2000 Feet

1:24000

N

Map printed 2/19/2008

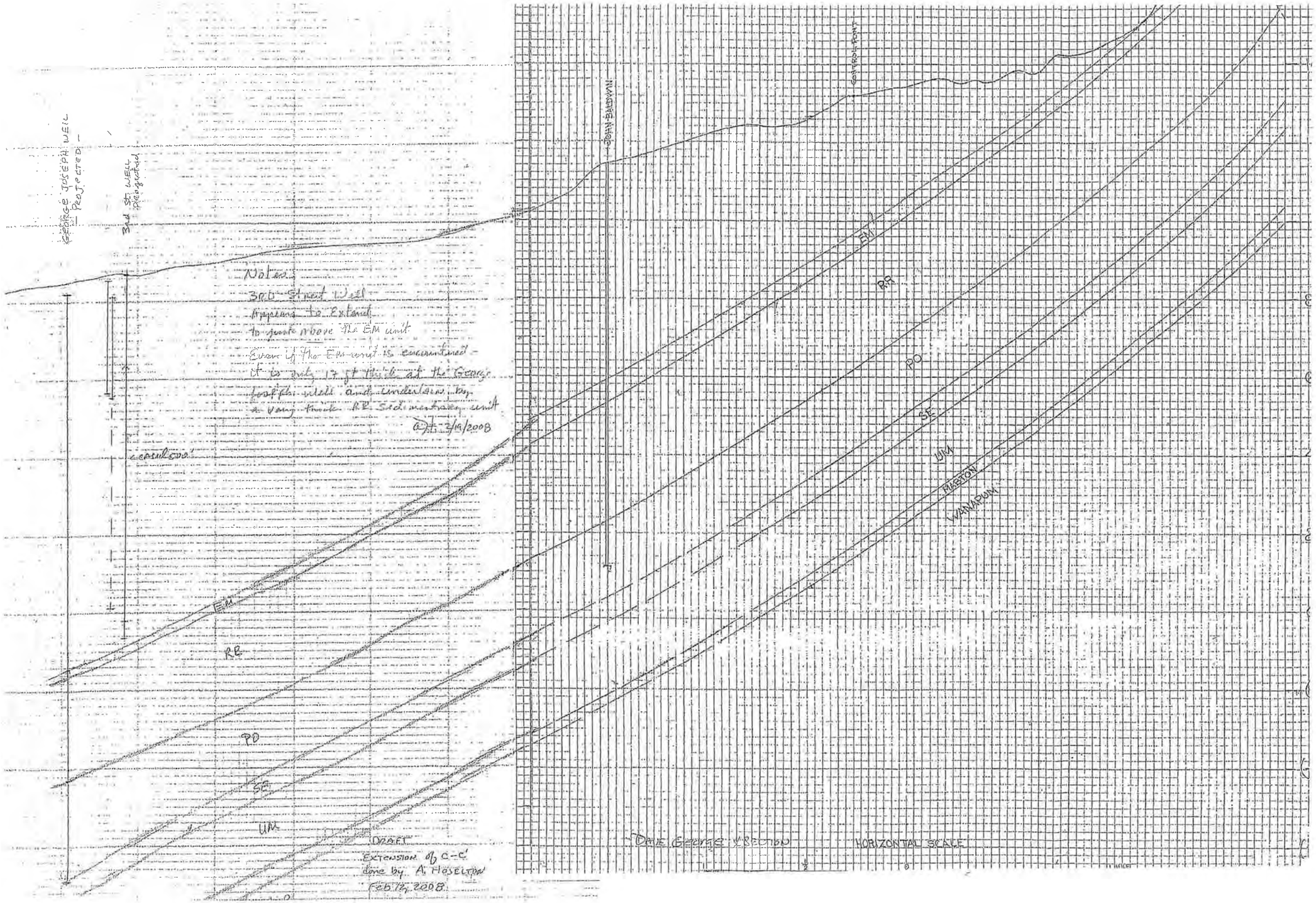

GEORGE JOSEPH WELL
PROJECTED
3rd St. WELL
Projected
Notes:
3RD Street Well
Appears to Extend
to just above the EM unit
Even if the EM unit is encountered -
it is only 17 ft thick at the George
Joseph well and underlain by
a very thick RR sedimentary unit
@ JT 2/19/2008
EM
RR
PO
SE
UM
DRAFT
Extension of C-C'
done by A. Hoselton
Feb 12, 2008
JOHN BALDWIN
CONTROL POINT
EM
RR
PO
SE
UM
MARTON
WANAPUM
DAVE GEORGE X-SECTION
HORIZONTAL SCALE

WELL LOG - RAINIER WELL

RETURN TO:
DIVISION OF WATER RESOURCES
335 GENERAL ADMINISTRATION E.
OLYMPIA, WASHINGTON

RAINER WELL
SO 1

S. F. No. 7358—4-57—8M. 48912.

RECEIVED
DEPARTMENT OF CONSERVATION
JUN 13 1958
AM PM
7,8,9,10,11,12,1,2,3,4,5,6

RECORD BY WELL DRILLER OR OTHER CONSTRUCTOR OF WORKS FOR WITHDRAWAL OF GROUND WATER

Under Permit No. G. W._____

("The well driller or other constructor of works for the withdrawal of public ground waters shall be obligated to furnish the permittee a certified record of the factual information necessary to show compliance with the provisions of this section." Sec. 8, Chap. 263, Laws of 1945.)

1. Town of Zillah, Washington
(Name and address of owner of well or other works for withdrawal of water)

2. Type; name or number of works where water is taken Municipal Well #4
(Well, tunnel or infiltration trench)

3. Date on which work on well or other structure was started January 31, 1958 (spud-in)

4. Date on which work was completed February 19, 1958 - final depth

5. If work on well or other structure was abandoned, give date —

and reason for abandonment —

6. DESCRIPTION OF WORKS:

(a) WELL: Depth 280 ft. Diameter 12" in. or ft. Dug or drilled drilled

Flowing or pump well pump Water Temp. _____

IF PUMP WELL: Type and size of pump is vertical turbine 500 GPM

Type and size of motor or engine is 50 Hp. electric motor

Depth from ground surface to water level before pumping 109 feet

After continuous operation for 24 (At least four) hours, the measured discharge of the pump is 813 g.p.m., and the drawdown of water level is 119 feet (Pumping level minus static water level)

Recovery data (taken after pump has been shut off) (time taken as zero when pump turned off) (water level measured from well top to water level)

Time	Water Level	Time	Water Level
Fully recovered in one hour			

Date of test March 21 - 24, 1958

IF FLOWING WELL: Measured discharge _____ g.p.m. on _____ (Date)

Shut-in pressure at ground surface _____ lbs. per sq. in. on _____ (Date)

Water is controlled by _____ (Cap, valve, etc.)

CASING: (Give diameter, commercial specifications and depth below ground surface of each casing size.)

12" in. diameter Standard black steel pipe from 0 to 242 ft.

_____ in. diameter _____ from _____ to _____ ft.

[illegible] casing or screens:

40' Johnson Everdur screen, 12" diam. from 238' 2" to 279' 9" ft.
(Number per foot and size of perforations, or describe screen)

10' of #20 slot; 30' of #50 slot from _____ to _____ ft.

_____ from _____ to _____ ft.

_____ from _____ to _____ ft.

_____ from _____ to _____ ft.

LOG OF WELL OR TUNNEL: (Describe each stratum or formation clearly, indicate if water bearing, and give thickness and depth as indicated.)

MATERIAL	Thickness (Feet)	Depth to bottom (Feet)
Topsoil	2	2
Brown hardpan	3	5
Gray clay	36	41
Brown sandy clay	92	133
Gray clay	12	145
Brown clay	23	168
Hard brown sand and gravel	37	205
Hard sandy silt, gravel & a little clay	25	230
Cemented gravel	5	235
Sand and gravel	10	245
Sand, gravel, silt and pea gravel	18	263
3 nd, silt and gravel	17	280

(b) INFILTRATION TRENCH OR TUNNEL: Type _____

Dimensions: _____
(Tunnel—length, course, and cross-sectional size) (Trench—minimum and maximum depths)

Bottom width _____ ft. Discharge _____ g.p.m. Date of test _____

Position of water bearing stratum with reference to portal of tunnel _____

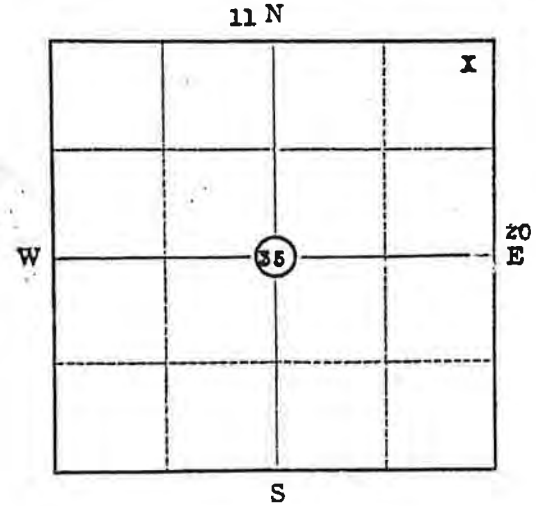

Scale: 1" = 2000'

Sec. 35 Twp. 11 N. Rge. 20 E

Show approximate location of well or other works with (X) on section plat at left.

MIDLAND DRILLING CO.

By: Eugene J. Jungmann
Signature of well driller or other constructor

Eugene J. Jungmann, Vice President
P. O. Box 637
Walla Walla, Washington
Address

STATE PRINTING PLANT OLYMPIA, WASH., 1957

The Department of Ecology does NOT Warranty Data and/or the Information on this Well Report

STATE OF WASHINGTON
DEPARTMENT OF CONSERVATION AND DEVELOPMENT

WELL LOG No. Appli. 4912

Date March 21-24, 1958

Record by well driller

Source driller's record

Location: State of WASHINGTON

County Yakima

Area

Map

NE¼ NW¼ NE¼ sec. 36 T. 11 N., R. 20 E.

Diagram of Section

Drilling Co. Midland Drilling Co.

Address Walla Walla, Wash.

Method of Drilling Date, 19

Owner Town of Zillah, Wash.

Address

Land surface, datum ft above / below

CORRELATION	MATERIAL	THICKNESS (feet)	DEPTH (feet)
	(Transcribe driller's terminology literally but paraphrase as necessary, in parentheses. If material water-bearing, so state and record static level if reported. Give depths in feet below land-surface datum unless otherwise indicated. Correlate with stratigraphic column, if feasible. Following log of materials, list all casings, perforations, screens, etc.)		
	Top soil	2	2
	Brown hardpan	3	5
	Gray clay	36	41
	Brown sandy clay	92	133
	Gray clay	12	145
	Brown clay	23	168
	Hard brown sand & gravel	37	205
	Hard sandy silt, gravel & a little clay	25	230
	Cemented gravel	5	235
	Sand & gravel	10	245
	Sand, gravel, silt & pea gravel	18	263
	Sand, silt & gravel	17	280
	PUMP TEST:		
	Dim. 280'x12"		
	SWL: 109 ft.		
	DD: 179 ft.		

Turn up (over) Sheet of sheets

WELL LOG.—Continued No. A 4912

Town of Zillah WA

CORRELATION	MATERIAL	THICKNESS (feet)	DEPTH (feet)
	Depth forward		
	Yield: 813 g.p.m.		
	Type & size of pump: vertical turbine 500 g.p.m.		
	Type & size of motor: 50 h.p. electric motor		
	CASING:		
	12" diam. Std. black steel pipe from 0 to 242 ft.		
	PERFORATIONS:		
	40 ft. Johnson Everdur screen, 12" screen from 238'2" to 279'9"		
	10' of #20 slot; 30' of #30 slot		

S. F. No. 7449—12-54—3M. 40108.

The Department of Ecology does NOT Warranty the Data and/or the Information on this Well Report

WELL LOG - 3RD AVENUE WELL

The Department of Ecology does NOT Warranty Data and/or the Information on this Well Report

STATE OF WASHINGTON
DEPARTMENT OF CONSERVATION
AND DEVELOPMENT

WELL LOG

No. Dacla. #555
Cert. #606-D

Date 1908, 19

Record by James P. Daley

Source G. W. Dacla Claims

Location: State of WASHINGTON

County Yakima

Area

~~NW~~ E½ SW¼ SE¼

¼ ¼ sec. 25 T. 11 N., R. 20 E. W.

DIAGRAM OF SECTION

Drilling Co.

Address

Method of Drilling drilled Date 1940 19

Owner Town of Zillah

Address Zillah, Washington

Land surface, datum ft. above / below

CORRELATION	MATERIAL	THICKNESS (feet)	DEPTH (feet)
	no record		
	Pump Test:		
	Dim: 950' x 12"		
	SWL: 116'		
	Dd: 276'		
	Yield 276 g.p.m.		
	Casing: 12" dia. distances not give		
	8" dasing		
	Pump: Sterling 8", 17 bowl, turbine		
	Motor: 25 hp, 220 U.S. Induction		

(Transcribe driller's terminology literally but paraphrase as necessary, in parentheses. If material water-bearing, so state and record static level if reported. Give depths in feet below land-surface datum unless otherwise indicated. Correlate with stratigraphic column, if feasible. Following log of materials, list all casings, perforations, screens, etc.)

Turn up

Sheet of sheets

PROTECTIVE COVENANT - WIPPCO WELL

AFTER RECORDING RETURN TO:

James C. Carmody
VELIKANJE, MOORE & SHORE, P.S.
P. O. Box 22550
Yakima, WA 98907

DECLARATION OF RESTRICTIVE COVENANTS

(FOR WELL PROTECTION AREA)

Grantor:	**CITY OF ZILLAH**
Grantee:	**CITY OF ZILLAH**
Abbreviated Legal Description:	**S 25, T 11 N, R 20 E** SW SW
Complete legal descriptions are on pages 5, 6, 7 of this document.	
Assessor's Tax Parcel ID No:	**201125-33003** 10, 11 + 12

DATED: 5/2, 2006

DECLARANT/OWNER: **CITY OF ZILLAH, a Washington municipality**
503 First Avenue
Zillah, Washington 98953

SUBJECT PROPERTY (BURDENED PROPERTY). The real property subject to this Declaration of Restrictive Covenants is situated in Yakima County, State of Washington and is described on attached Exhibit A.

7507888
Page: 1 of 12
05/12/2006 03:09P
Yakima Co, WA
CITY OF ZILLAH COV $43.00

INTRODUCTION. The Declarant owns the Subject Property and has constructed or intends to construct a well and waterworks to furnish water for public consumption on the Property. Declarant is required to keep the water supplied from the well free from impurities which might be injurious to the public health. Accordingly, the Declarant desires to set forth covenants, conditions, reservations and restrictions on the Covenant Area described in paragraph 1 below, which prevent certain uses of the property that have the potential to pollute or contaminate the groundwater. The covenants, conditions, reservations and restrictions set forth in this instrument are imposed upon the Subject Property and shall be considered as restrictive covenants running with the title to the Property.

RESTRICTIVE COVENANT

Subject to the terms and conditions set forth below, the Declarant hereby declares and creates the following use restrictions on the Covenant Area described in paragraph 1 below:

1. ***Covenant Area.*** Declarant hereby declares and creates restrictions on the Covenant Area described below which prevent improvements from being constructed upon or the use of the Covenant Area for any purposes which have the potential to pollute or contaminate the groundwater within the Covenant Area, including but not limited to septic systems, sewers, drain fields, spray fields, confined animal feeding operations of any kind, the above or underground storage of hazardous substances of any kind or description, disposal or release of hazardous substances or the housing and enclosing of livestock or animals;

COVENANT AREA – SEE DESCRIPTION ATTACHED HERETO AS EXHIBIT B.

The owner of the Subject Property shall have the right to use the surface of the ground within the Covenant Area for any purpose which is not prohibited and which will not have the potential to pollute or contaminate the groundwater within the Covenant Area.

2. **Binding Effect.** This Declaration shall be binding upon and inure to the benefit of the owner of the Subject Property or the water system located thereon, its successors and assigns, and shall constitute a covenant running with the land.

7507888
Page: 2 of 12
05/12/2006 03:09P
CITY OF ZILLAH COV $43.00 Yakima Co, WA

IN WITNESS WHEREOF, the undersigned have set their hands on the day and year first above written.

OWNER/DECLARANT:

CITY OF ZILLAH

By: Gary V. Clark
Mayor Gary Clark

WITNESSED AND ATTESTED TO:

By: Sharon Bounds
Sharon Bounds, City Clerk

STATE OF WASHINGTON)
) ss.
County of Yakima)

I certify that I know or have satisfactory evidence that **GARY CLARK** is the person who appeared before me, and said person acknowledged that he signed this instrument, on oath stated that he was authorized to execute the instrument and acknowledged it as the Mayor of City of Zillah, a municipality, to be the free and voluntary act of such party for the uses and purposes therein described.

Dated this 1 day of May, 2006.

SHELLI RAE QUANTRELL
COMMISSION EXPIRES
NOTARY PUBLIC
JUNE 14, 2008
STATE OF WASHINGTON

Shelli Rae Quantrell
Shelli Rae Quantrell
(*print name*)
NOTARY PUBLIC in and for the state of Washington, residing at Zillah
My appointment expires June 14, 2008

CITY OF ZILLAH COV $43.00
7507888
Page: 3 of 12
05/12/2006 03:09P
Yakima Co, WA

STATE OF WASHINGTON)
) ss.
County of Yakima)

I certify that I know or have satisfactory evidence that **SHARON BOUNDS** is the person who appeared before me, and said person acknowledged that he signed this instrument, on oath stated that he was authorized to execute the instrument and acknowledged it as the City Clerk of City of Zillah, a municipality, to be the free and voluntary act of such party for the uses and purposes therein described.

Dated this 1 day of May, 2006.

SHELLI RAE QUANTRELL
COMMISSION EXPIRES
NOTARY PUBLIC
JUNE 14, 2008
STATE OF WASHINGTON

Shelli Rae Quantrell
Shelli Rae Quantrell
(print name)
NOTARY PUBLIC in and for the state of Washington, residing at Zillah
My appointment expires June 14, 2008

7507888
Page: 4 of 12
05/12/2006 03:08P
Yakima Co, WA
CITY OF ZILLAH COV $43.00

Parcel "A"

Beginning at a point on the North line of the Southwest Quarter of the Southwest Quarter of Section 25, Township 11 North, Range 20 East, W.M., which said point is 302 feet East of the Northwest corner of said Southwest Quarter of the Southwest Quarter, of said Section 25;
Running thence South and parallel with the West line of said Section 25 a distance of 392 feet, more or less, to an intersection with the northern boundary of the right of way of North Yakima and Valley Railroad;
Thence in a southeasterly direction along said northern boundary a distance of 123.7 feet:
Thence North and parallel with the West line of said Section 25 a distance of 463 feet, more or less, to an intersection with the North line of said Southwest Quarter of the Southwest Quarter of Section 25;
Thence West along said North line a distance of 102 feet to the Point of Beginning.

EXHIBIT A

CITY OF ZILLAH CDV $13.00

7507888
Page: 5 of 12
05/12/2006 03:05P
Yakima Co, WA

Legal Description for Declaration of Well Restrictive Covenant

Parcel Number: 201125-33003
Property Owner: City of Zillah

That portion of the following described Parcel "A" lying within a 75.00 foot radius of the City of Zillah Well. The center of said well being described as follows:

The center of said well is 378.97 feet east of the west line of the Southwest Quarter of the Southwest Quarter of Section 25, Township 11 North, Range 20 East, W.M., as measured perpendicular thereto and 152.00 feet south of the north line of said Southwest Quarter of the Southwest Quarter as measured perpendicular thereto.

Parcel "A"

Beginning at a point on the North line of the Southwest Quarter of the Southwest Quarter of Section 25, Township 11 North, Range 20 East, W.M., which said point is 302 feet East of the Northwest corner of said Southwest Quarter of the Southwest Quarter; of said Section 25;
Running thence South and parallel with the West line of said Section 25 a distance of 392 feet, more or less, to an intersection with the northern boundary of the right of way of North Yakima and Valley Railroad;
Thence in a southeasterly direction along said northern boundary a distance of 123.7 feet:
Thence North and parallel with the West line of said Section 25 a distance of 463 feet, more or less, to an intersection with the North line of said Southwest Quarter of the Southwest Quarter of Section 25;
Thence West along said North line a distance of 102 feet to the Point of Beginning.

EXHIBIT "B"

CITY OF ZILLAH COU $43.00
7507868
Page: 6 of 12
05/12/2006 03:09P
Yakima Co, WA

SUBJECT PROPERTY (BURDENED PROPERTY). The Real Property on which the covenants and use restrictions set forth below apply to the following described Real Property situated in Yakima County, State of Washington:

SEE ATTACHED EXHIBIT A.

BENEFITED PROPERTY. The use restrictions created in these Covenants shall be appurtenant to the following described Real Property ("Benefited Property") located adjacent to the Covenant Area:

SEE ATTACHED EXHIBIT B.

INTRODUCTION. The undersigned Grantors own the Subject Property described above. The Grantee, the City of Zillah, Washington, owns the Benefited Property described above and operates a well and waterworks supplying water for public use on the property, which is in close proximity to the property owned by Grantors. The City is required to keep the water supplied from its well and waterworks free from impurities which might be injurious to public health. The purpose of these Restrictive Covenants is to prevent certain uses of a portion of the Grantor's property (the "Covenant Area"), which might have the potential to pollute or contaminate the well and water supply. Accordingly, the restrictive covenants set forth in this document are imposed upon the Covenant Area described in paragraph 1 below and shall be construed as a restrictive covenant running with title to the Subject Property.

SUBJECT TO THE TERMS AND CONDITIONS SET FORTH BELOW, THE GRANTORS IN CONSIDERATION OF TEN DOLLARS ($10.00) IN HAND PAID AND OTHER GOOD AND VALUABLE CONSIDERATION, HEREBY AGREE AND COVENANT WITH THE CITY OF ZILLAH, WASHINGTON, ITS SUCCESSORS AND ASSIGNS TO LIMIT USE OF THE COVENANT AREA AS SET FORTH IN PARAGRAPH 1 BELOW.

1. **Use Restrictions (Well Protection Area)**. The Grantors, on behalf of themselves, their heirs, successors and assigns, hereby agree and covenant for the benefit of the owner of the Benefited Property, its successors and assigns to refrain from constructing certain improvements on or using the Covenant Area (described below) for any purpose that would have the potential to pollute or contaminate the groundwater including septic systems, sewers, drain fields, spray fields, confined animal feeding operations of any kind, the above or underground storage of hazardous substances of any kind or description, disposal or release of hazardous substances or the housing and enclosing of livestock or other animals;

COVENANT AREA - SEE DESCRIPTION ATTACHED HERETO AS EXHIBIT C.

CITY OF ZILLAH COV $13.00
7507888
Page: 7 of 12
05/12/2006 03:09P
Yakima Co, WA

AFTER RECORDING RETURN TO:

James C. Carmody
VELIKANJE, MOORE & SHORE, P.S.
P. O. Box 22550
Yakima, WA 98907

RESTRICTIVE COVENANTS
(FOR WELL PROTECTION AREA)

Grantor/Declarant:	**KUNS, DAVID L.** **KUNS, CARLA A.**
Grantee:	**CITY OF ZILLAH**

Abbreviated Legal Description: S 25, T 11 N, R 20 E

Complete legal descriptions are on pages 4, 5, 6 of this document.

Assessor's Tax Parcel ID No: 201125-33002

DATED: May 12, 2006 DLK CAK

DECLARANT/OWNER: **DAVID L. AND CARLA A. KUNS,**
husband and wife
3050 Thacker Road
Zillah, Washington 98953

GRANTEE: **CITY OF ZILLAH, a Washington municipality**
503 First Avenue
Zillah, Washington 98953

7507888
Page: 8 of 12
05/12/2006 03:08P
Yakima Co, WA
CITY OF ZILLAH CDV $43.00

The owner of the Subject Property shall have the right to use the ground within the Covenant Area for any purpose which is not prohibited above, and which does not have the potential to pollute or contaminate the groundwater and well on the Benefited Property.

2. **Binding Effect**. This Restrictive Covenant shall be binding upon and inure to the benefit of the owner of the Benefited and Burdened Properties, their heirs, successors and assigns, and shall constitute a covenant running with the land.

IN WITNESS WHEREOF, the undersigned have set their hands on the day and year first above written.

OWNER/DECLARANT:

David L. Kuns

DAVID L. KUNS

Carla A. Kuns

CARLA A. KUNS

STATE OF WASHINGTON)
) ss.
County of Yakima)

I certify that I know or have satisfactory evidence that David L. and Carla A. Kuns, husband and wife, are the persons who appeared before me and said persons acknowledged that they signed this instrument and acknowledged it to be their free and voluntary act for the uses and purposes therein mentioned.

Dated this 12 day of May, 2006.

Shelli Rae Quantrell

Shelli Rae Quantrell
(*print name*)
NOTARY PUBLIC in and for the state of Washington, residing at Zillah
My appointment expires June 14, 2008

SHELLI RAE QUANTRELL
NOTARY PUBLIC
COMMISSION EXPIRES
JUNE 14, 2008
STATE OF WASHINGTON

7507888
Page: 8 of 12
05/12/2006 03:09P
CITY OF ZILLAH COV $43.00
Yakima Co, WA

Parcel "A"

Beginning at a point on the North line of the Southwest Quarter of the Southwest Quarter of Section 25, Township 11 North, Range 20 East, W.M., 674.9 feet West of the Northeast corner thereof;
Thence West along said North line 241.8 feet;
Thence South 0°31' West to the Northerly right of way line of the Northern Pacific Railroad;
Thence Southeasterly along said right of way line to a point bearing South 0°31' West from the point of beginning;
Thence North 0°31' East to the Point of Beginning.

EXCEPT any portion lying Southerly of the following described line:

Commencing at a point on the North line of said Southwest Quarter of said Southwest Quarter, 674.9 feet West of the Northeast corner thereof;
Thence South 0°31' West 437.50 feet to a point marked by a ½" rebar per that Survey recorded in Book 63 of Surveys, Page 70, under Auditor's file No. 3137911, records of Yakima County, Washington and the true point of beginning;
Thence South 86°17'31" West 240.35 feet, more or less, to terminate at said Northerly right of way line of the Northern Pacific Railroad, said termination point being marked by a 3/8" rebar and plastic cap as shown on that Survey recorded in Book 61 of Surveys, Page 60, under Auditor's file No. 3101549, records of Yakima County, Washington.

EXHIBIT A

CITY OF ZILLAH COU $43.00
7507888
Page: 10 of 12
05/12/2006 03:08P
Yakima Co, WA

Parcel "A"

Beginning at a point on the North line of the Southwest Quarter of the Southwest Quarter of Section 25, Township 11 North, Range 20 East, W.M., which said point is 302 feet East of the Northwest corner of said Southwest Quarter of the Southwest Quarter; of said Section 25;
Running thence South and parallel with the West line of said Section 25 a distance of 392 feet, more or less, to an intersection with the northern boundary of the right of way of North Yakima and Valley Railroad;
Thence in a southeasterly direction along said northern boundary a distance of 123.7 feet:
Thence North and parallel with the West line of said Section 25 a distance of 463 feet, more or less, to an intersection with the North line of said Southwest Quarter of the Southwest Quarter of Section 25;
Thence West along said North line a distance of 102 feet to the Point of Beginning.

EXHIBIT B

7507888
Page: 11 of 12
05/12/2008 03:09P
Yakima Co, WA
CITY OF ZILLAH COV $43.00

Legal Description for Well Restrictive Covenant

Parcel Number: 201125-33002
Property Owner: David L. and Carla A. Kuns

That portion of the following described Parcel "A" lying within a 75.00 foot radius of the City of Zillah Well. The center of said well being described as follows:

The center of said well is 378.97 feet east of the west line of the Southwest Quarter of the Southwest Quarter of Section 25, Township 11 North, Range 20 East, W.M., as measured perpendicular thereto and 152.00 feet south of the north line of said Southwest Quarter of the Southwest Quarter as measured perpendicular thereto.

Parcel "A"

Beginning at a point on the North line of the Southwest Quarter of the Southwest Quarter of Section 25, Township 11 North, Range 20 East, W.M., 674.9 feet West of the Northeast corner thereof;
Thence West along said North line 241.8 feet;
Thence South 0°31' West to the Northerly right of way line of the Northern Pacific Railroad;
Thence Southeasterly along said right of way line to a point bearing South 0°31' West from the point of beginning;
Thence North 0°31' East to the Point of Beginning.

EXCEPT any portion lying Southerly of the following described line:

Commencing at a point on the North line of said Southwest Quarter of said Southwest Quarter, 674.9 feet West of the Northeast corner thereof;
Thence South 0°31' West 437.50 feet to a point marked by a ½" rebar per that Survey recorded in Book 63 of Surveys, Page 70, under Auditor's file No. 3137911, records of Yakima County, Washington and the true point of beginning;
Thence South 86°17'31" West 240.35 feet, more or less, to terminate at said Northerly right of way line of the Northern Pacific Railroad, said termination point being marked by a 3/8" rebar and plastic cap as shown on that Survey recorded in Book 61 of Surveys, Page 60, under Auditor's file No. 3101549, records of Yakima County, Washington.

EXHIBIT "C"



7507888
Page 12 of 12
05/12/2006 03:09P
Yakima Co, WA

SUSCEPTIBILITY ASSESSMENT SURVEY FORM - RAINIER WELL

COPY

Ground Water Contamination Susceptibility Assessment Survey Form

Version 2.1b

IMPORTANT! **Please complete one form for each ground water source (well, wellfield, spring) used in your water system. Photocopy as necessary.**

PART I: System Information

Well owner/manager : City of Zillah

Water system name : City of Zillah

County: Yakima

Water system number: 99800 W Source number: S01

Well depth: 280' (ft.) (*From WFI form*)

Source name: Rainier well

WA well identification tag number: ___ ___ ___-___ ___ ___

__x__ well not tagged

Number of connections: 885 Population served: 2080

Township: 11 N. Range: 20 E.W.M.

Section: 36 1/4 1/4 Section: NE 1/4, NW 1/4, NE 1/4

Latitude/longitude (if available): 46°, 24', 10" 120°, 15', 31"

How was lat./long. determined?

_____ global positioning device _____ survey __x__ topographic map
___other: _____

* Please refer to Assistance Packet for details and explanations of all questions in Parts II through V.

PART II: Well Construction and Source Information

1) Date well originally constructed: 2 /19 /58 month/day/year

last reconstruction: ___ / ___ /___ month/day/year

_____ information unavailable

2) Well driller: Midland Drilling Co.

Eugene J. Jungmann

___ well driller unknown

3) Type of well:

X Drilled: ___ rotary ___ bored X cable (percussion) ___ Dug

___ Other: ___ spring(s) ___ lateral collector (Ranney)

___ driven ___ jetted ___ other: _____

Additional comments: _____

4) Well report available? X YES (attach copy to form) ___ NO

If no well log is available, please attach any other records documenting well construction; e.g. boring logs, "as built" sheets, engineering reports, well reconstruction logs.

5) Average pumping rate: 550 (gallons/min)

Source of information: Meter at well house

If not documented, how was pumping rate determined? _____

___ Pumping rate unknown

6) Is this source treated? NO

If so, what type of treatment:

___ disinfection ___ filtration ___ carbon filter ___ air stripper ___ other

Purpose of treatment (describe materials to be removed or controlled by treatment):

7) If source is chlorinated, is a chlorine residual maintained: ___ YES ___ NO

Residual level: _____ (*At the point closest to the source.*)

PART III: Hydrogeologic Information

1) Depth to top of open interval: [check one]

___ < 20 ft _X_ 20–50 ft ___ 50–100 ft ___ 100–200 ft ___ >200 ft

___ information unavailable (*'<' means less than; '>' means greater than*)

2) Depth to ground water (static water level):

___ < 20 ft ___ 20–50 ft ___ 50–100 ft _X_ >100 ft

___ flowing well/spring (artesian)

How was water level determined?

_X_ well log ___ other: _____

109' depth to ground water unknown

3) If source is a flowing well or spring, what is the confining pressure: Unknown

_____ psi (pounds per square inch)
or
_____ feet above wellhead

4) If source is a flowing well or spring, is there a surface impoundment, reservoir, or catchment associated with this source: ___ YES _X_ NO

5) Wellhead elevation (height above mean sea level): 850 (ft)

How was elevation determined? _X_ topographic map ___ Drilling/Well Log ___ altimeter

___ other: _____

___ information unavailable

6) Confining layers: (This can be completed only for those sources with a drilling log, well log or geologic report describing subsurface conditions. Please refer to assistance package for example.)

_x_ evidence of a confining layer in well log

___ no evidence of a confining layer in well log

If there is evidence of a confining layer, is the depth to ground water more than 20 feet above the bottom of the lowest confining layer? _x_ YES ___ NO

___ information unavailable

7) Sanitary setback:

X < 100 ft* ___ 100–120 ft ___ 120–200 ft ___ > 200 ft
* if less than 100 ft describe the site conditions:

Resident's approx. 60' away east and west

8) Wellhead construction:

X wellhead enclosed in a wellhouse

X controlled access (describe): Locked door

___ other uses for wellhouse (describe): _____

___ no wellhead control

9) Surface seal:

___ 18 ft

___ < 18 ft (no Department of Ecology approval) ('< ' *means less than*)

___ < 18 ft (Approved by Ecology, include documentation) ('< ' *means less than*)

___ > 18 ft ('> ' *means greater than*)

X depth of seal unknown

___ no surface seal

10) Annual rainfall (inches per year):

X < 10 in/yr ___ 10–25 in/yr ___ > 25 in/yr

PART IV: Mapping Your Ground Water Resource

1) Annual volume of water pumped: ~~57,272,000~~ 142,728,000 (gallons)

~~How was this determined?~~

X meter

___ estimated: X pumping rate (550 GPM)

X pump capacity (550 GPM)

___ other: _____

2) "Calculated Fixed Radius" estimate of ground water movement:
(see Instruction Packet)

6 month ground water travel time : ~~440~~ 800 (ft)

1 year ground water travel time : ~~620~~ 980 (ft)

5 year ground water travel time: ~~1,390~~ 2550 (ft)

10 year ground water travel time: ~~1,970~~ 3590 (ft)

Information available on length of screened/open interval?

X YES ___ NO

Length of screened/open interval: 10' #20; 30' #50 (ft)

3) Is there a river, lake, pond, stream, or other obvious surface water body within the 6 month time of travel boundary? ___ YES X NO (mark and identify on map).

4) Is there a stormwater and/or wastewater facility, treatment lagoon, or holding pond located within the 6 month time of travel boundary? ___ YES X NO (mark and identify on map).

Comments: The wastewater treatment plant is located at a down gradient elevation of 800'

PART V: Assessment of Water Quality

1) Regional sources of risk to ground water:

Please indicate if any of the following are present within a circular area around your water source having a radius up to and including the five year ground water travel time:

	6 month	1 year	5 year	unknown
likely pesticide application				X
stormwater injection wells				X
other injection wells				X
abandoned ground water well				X
landfills, dumps, disposal areas				X
known hazardous materials clean-up site				X
water system(s) with known quality problems				X
population density > 1 house/acre	X	X	X	
residences commonly have septic tanks				X
Wastewater treatment lagoons				X
sites used for land application of waste				X

Mark and identify on map any of the risks listed above which are located within the 6 month time of travel boundary? (*Please include a map of the wellhead and time of travel areas with this form. Please locate and mark any of the following.*)

If other recorded or potential sources of ground water contamination exist within the ten year time of travel circular zone around your water supply, please describe:

UNKNOWN

2) Source specific water quality records:

Please indicate the occurrence of any test results since 1986 that meet the following conditions: (Unless listed on assessment, MCLs are listed in assistance package.)

A. Nitrate: (Nitrate MCL = 10 mg/l)	YES	NO
Results greater than MCL	___	X
< 2 mg/liter nitrate	___	___
2–5 mg/liter nitrate	___	___
> 5 mg/liter nitrate	X	___
___ Nitrate sampling records unavailable		

B. VOCs: (VOC detection level 0.5 ug/l or 0.0005 mg/l.)	YES	NO
Results greater than MCL or SAL	___	___
VOCs detected at least once	___	___
VOCs never detected	___	X
___ VOC sampling records unavailable		

C. EDB/DBCP:	YES	NO
(EDB MCL = 0.05 ug/l or 0.00005 mg/l. DBCP MCL = 0.2 ug/l or 0.0002 mg/l.)		
EDB/DBCP detected below MCL at least once	___	___
EDB/DBCP detected above MCL at least once	___	___
EDB/DBCP never detected	___	X
___ EDB/DBCP tests required but not yet completed		
___ EDB/DBCP tests not required		

D. Other SOCs (Pesticides):	YES	NO
Other SOCs detected (pesticides and other synthetic organic chemicals)	___	___

___ Other SOC tests performed but none detected
(list test methods in comments

X Other SOC tests not performed

If any SOCs in addition to EDB/DBCP were detected, please identify and date. If other SOC tests were performed, but no SOCs detected, list test methods here: _____

_____

_____

_____

E. Bacterial contamination:

	YES	NO
Any bacterial detection(s) in the past 3 years in samples taken from the source (not distribution sampling records).	___	X
Has source (in past 3 years) had a bacteriological contamination problem found in distribution samples that was attributed to the source.	___	X

___ Source sampling records for bacteria unavailable

Part VI: Geographic or Hydrologic Factors Contributing to a Non-Circular Zone of Contribution

The following questions will help identify those ground water systems which may not be accurately represented by the calculated fixed radius (CFR) method described in Part IV. For these sources, the CFR areas should be used as a preliminary delineation of the critical time of travel zones for that source. As a system develops its Wellhead Protection Plan for theses sources, a more detailed delineation method should be considered.

1) Is there evidence of obvious hydrologic boundaries within the 10 year time of travel zone of the CFR? (Does the largest circle extend over a stream, river, lake, up a steep hillside, and/or over a mountain or ridge?)

X YES ___ NO

Describe with references to map produced in Part IV:

The Yakima River is located down gradient

The Sunnyside canal located north of well

2) Aquifer Material:

A) Does the drilling log, well log or other geologic/engineering reports identify that the well is located in an area where the underground conditions are identified as fractured rock and/or basalt terrain?

___ YES X NO

B) Does the drilling log, well log or other geologic/engineering reports indicate that the well is located in an area where the underground conditions are primarily identified as coarse sand and gravel?

X YES ___ NO

3) Is the source located in an aquifer with a high horizontal flow rate? (These can include sources located on flood plains of large rivers, artesian wells with high water pressure, and/or shallow flowing wells and springs.)

___ YES X NO

4) Are there other high capacity wells (agricultural, municipal and/or industrial) located within the CFRs?

a) Presence of ground water extraction wells removing more than approximately 500 gal/min within...

	YES	NO	unknown
< 6 month travel time			
6 month–1 year travel time			
1–5 year travel time			
5–10 year travel time		X	

b) Presence of ground water recharge wells (dry wells) or heavy irrigation within...

	YES	NO	unknown
< 1 year travel time			
1–5 year travel time			
5–10 year travel time	X		

Please identify or describe additional hydrologic or geographic conditions that you believe may affect the shape of the zone of contribution for this source. Where possible, reference them to locations on the map produced in Part IV.

UNKNOWN

Suggestions and Comments

Did you attend one of the susceptibility workshops? ___ YES X NO

Did you find it useful? ___ YES ___ NO

Did you seek outside assistance to complete the assessment? X YES ___ NO

This form and instruction packet are still in the process of development. Your comments, suggestions and questions will help us upgrade and improve this assessment form. If you found particular sections confusing or problematic please let us know. How could this susceptibility assessment be improved or made clearer? Did the instruction package help you find the information needed to complete the assessment? How much time did it take you to complete the form? Were you able to complete the assessment without additional/outside expertise? Do you feel the assessment was valuable as a learning experience? Any other comments or constructive criticisms you have would be appreciated.

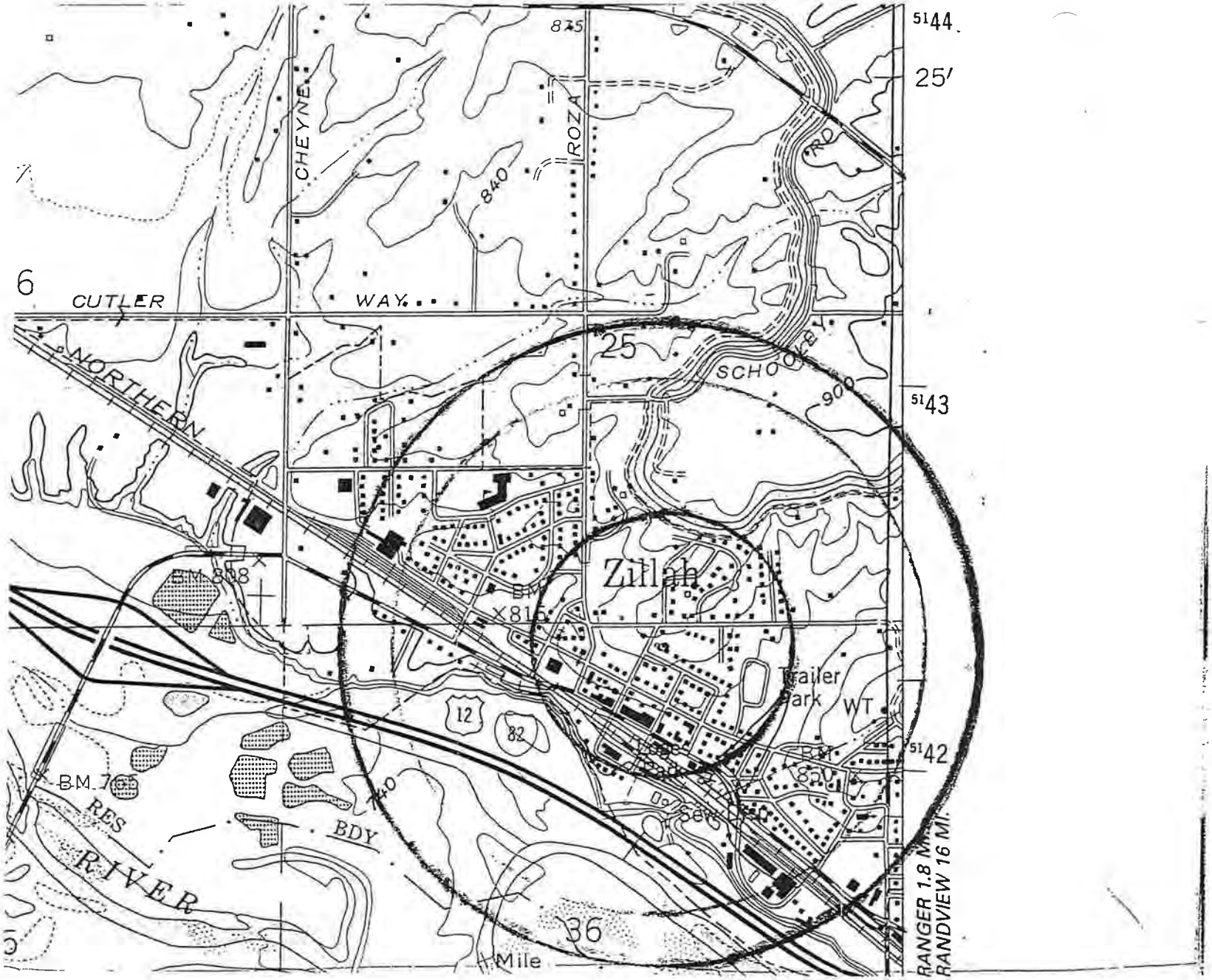

- RAINIER AVE WELL 501
- 5 YRS
- 1 YRS
- 6 MO

SUSCEPTIBILITY ASSESSMENT SURVEY FORM - 3RD AVENUE WELL

Copy

Ground Water Contamination Susceptibility Assessment Survey Form

Version 2.1b

Please complete one form for each ground water source (well, wellfield, spring) used in your water system. Photocopy as necessary.

System Information

...manager : City of Zillah

...m name : City of Zillah

Yakima

...m number: 99800 W Source number: S02

... 800' (ft.) (*From WFI form*)

...e: Third Ave. well

... Identification tag number:___ ___ ___-___ ___ ___

__X__ well not tagged

... connections: 885 Population served: 2080

... 11 N Range: 20

... 25 1/4 1/4 Section: E1/2, SW 1/4, SE 1/4

... ngitude (if available): 46°, 24', 13" 120°, 15', 28"

... at./long. determined?

_____ global positioning device _____ survey __X__ topographic map
___other: _____

Please refer to Assistance Packet for details and explanations of all questions in Parts II through V.

Well Construction and Source Information

... originally constructed: ___ / ___ /08 month/day/year

last reconstruction: 6 / 1 /87 month/day/year Video taped well

_____ information unavailable

2) Well driller: _____

_____

_____

X well driller unknown

3) Type of well:

X Drilled: ___ rotary ___ bored X cable (percussion) ___ Dug

___ Other: ___ spring(s) ___ lateral collector (Ranney)

___ driven ___ jetted ___ other: _____

Additional comments: _____

_____

4) Well report available? ___ YES (attach copy to form) X NO

If no well log is available, please attach any other records documenting well construction; e.g. boring logs, "as built" sheets, engineering reports, well reconstruction logs.

5) Average pumping rate: 325 (gallons/min)

Source of information: Meter

If not documented, how was pumping rate determined? Meter

_____

___ Pumping rate unknown

6) Is this source treated? NO

If so, what type of treatment:

___ disinfection ___ filtration ___ carbon filter ___ air stripper ___ other

Purpose of treatment (describe materials to be removed or controlled by treatment):

_____

_____

7) If source is chlorinated, is a chlorine residual maintained: ___ YES ___ NO

Residual level: _____ (*At the point closest to the source.*)

Hydrogeologic Information

...h of open interval: [check one]

__ 20 ft __ 20–50 ft __ 50–100 ft X 100–200 ft __ >200 ft

__ ...formation unavailable ('< ' *means less than;* '> ' *means greater than*)

...ground water (static water level):

__ < 20 ft __ 20–50 ft __ 50–100 ft X > 100 ft

__ ...lowing well/spring (artesian)

...was water level determined?

__ ...ell log X other: Air line and Video Tape

__ ...epth to ground water unknown

...e is a flowing well or spring, what is the confining pressure: Flowing well

...nk psi (pounds per square inch)
or
_____ feet above wellhead

...If ...e is a flowing well or spring, is there a surface impoundment, reservoir, or catchment associated with ...ource: __ YES X NO

...W ...elevation (height above mean sea level): 840 (ft)

...was elevation determined? X topographic map __ Drilling/Well Log __ altimeter

__ ...ther: _____

__ ...formation unavailable

...) Con...ying layers: (This can be completed only for those sources with a drilling log, well log or geologic report ...cribing subsurface conditions. Please refer to assistance package for example.)

__ ...evidence of a confining layer in well log

__ no evidence of a confining layer in well log

...re is evidence of a confining layer, is the depth to ground water more than 20 feet above the ...m of the lowest confining layer? __ YES __ NO

__ ...formation unavailable

7) Sanitary setback:

X < 100 ft* ___ 100–120 ft ___ 120–200 ft ___ > 200 ft

* if less than 100 ft describe the site conditions:

Resident's located within 75'

8) Wellhead construction:

X wellhead enclosed in a wellhouse

___ controlled access (describe): Lock door and fenced

___ other uses for wellhouse (describe): _____

___ no wellhead control

9) Surface seal:

___ 18 ft

___ < 18 ft (no Department of Ecology approval) ('< ' *means less than*)

___ < 18 ft (Approved by Ecology, include documentation) ('< ' *means less than*)

___ > 18 ft ('> ' *means greater than*)

X depth of seal unknown

___ no surface seal

___

10) Annual rainfall (inches per year):

X < 10 in/yr ___ 10–25 in/yr ___ ≥ 25 in/yr

P... Mapping Your Ground Water Resource

1) ... olume of water pumped: 159606 (gallons)

... was this determined?

__ meter

__ estimated: __ pumping rate (325 GPM)

__ pump capacity (325 GPM)

__ other: This a back-up we use as needed

2) "C...culated Fixed Radius" estimate of ground water movement:
see Instruction Packet)

... month ground water travel time : 140 (ft)

... year ground water travel time : 200 (ft)

... year ground water travel time: 440 (ft)

...0 year ground water travel time: 620 (ft)

Information available on length of screened/open interval?

__ YES X NO

Length of screened/open interval: Unknown (ft)

3) Is there a river, lake, pond, stream, or other obvious surface water body within the 6 month time of travel boundary? __ YES X NO (mark and identify on map).

4) Is there a stormwater and/or wastewater facility, treatment lagoon, or holding pond located within the 6 month time of travel boundary? __ YES X NO (mark and identify on map).

Comments: Waste water treatment plant is located at a down gradient elevation 800'

PART V: Assessment of Water Quality

1) Regional sources of risk to ground water:

Please indicate if any of the following are present within a circular area around your water source having a radius up to and including the five year ground water travel time:

	6 month	1 year	5 year	unknown
likely pesticide application				X
stormwater injection wells				X
other injection wells				X
abandoned ground water well				X
landfills, dumps, disposal areas				X
known hazardous materials clean-up site				X
water system(s) with known quality problems				X
population density > 1 house/acre	X			
residences commonly have septic tanks				X
Wastewater treatment lagoons				X
sites used for land application of waste				X

Mark and identify on map any of the risks listed above which are located within the 6 month time of travel boundary? (*Please include a map of the wellhead and time of travel areas with this form. Please locate and mark any of the following.*) NONE

If other recorded or potential sources of ground water contamination exist within the ten year time of travel circular zone around your water supply, please describe:

waste water treatment plant is at a down gradient elevation 800'.

2. ...pecific water quality records:

...ase indicate the occurrence of any test results since 1986 that meet the following conditions: ...ass listed on assessment, MCLs are listed in assistance package.)

A. __ Nitrate MCL = 10 mg/l)	YES	NO
...sults greater than MCL	___	X
... mg/liter nitrate	___	X
...3 mg/liter nitrate	___	___
...3 mg/liter nitrate	___	___
___ Nitrate sampling records unavailable		

B. __ VOC detection level 0.5 ug/l or 0.0005 mg/l.)	YES	NO
...sults greater than MCL or SAL	___	___
...Cs detected at least once	___	___
...Cs never detected	___	X
___ VOC sampling records unavailable		

C. EDB/DBCP:	YES	NO
(EDB MCL = 0.05 ug/l or 0.00005 mg/l. DBCP MCL = 0.2 ug/l or 0.0002 mg/l.)		
...B/DBCP detected below MCL at least once	___	___
...B/DBCP detected above MCL at least once	___	___
...B/DBCP never detected	___	X
___ EDB/DBCP tests required but not yet completed		
___ EDB/DBCP tests not required		

D. Other SOCs (Pesticides):	YES	NO
...ther SOCs detected	___	___
...esticides and other synthetic organic chemicals)		

___ Other SOC tests performed but none detected
(list test methods in comments
X Other SOC tests not performed

...f any ...Cs in addition to EDB/DBCP were detected, please identify and date. If other SOC tests were ...performed but no SOCs detected, list test methods here: _____

_____

_____

_____

E. Bacterial contamination:

	YES	NO
Any bacterial detection(s) in the past 3 years in samples taken from the source (not distribution sampling records).	___	X
Has source (in past 3 years) had a bacteriological contamination problem found in distribution samples that was attributed to the source.	___	X

___ Source sampling records for bacteria unavailable

Part VI: Geographic or Hydrologic Factors Contributing to a Non-Circular Zone of Contribution

The following questions will help identify those ground water systems which may not be accurately represented by the calculated fixed radius (CFR) method described in Part IV. For these sources, the CFR areas should be used as a preliminary delineation of the critical time of travel zones for that source. As a system develops its Wellhead Protection Plan for theses sources, a more detailed delineation method should be considered.

1) Is there evidence of obvious hydrologic boundaries within the 10 year time of travel zone of the CFR? (Does the largest circle extend over a stream, river, lake, up a steep hillside, and/or over a mountain or ridge?)

X YES ___ NO

Describe with references to map produced in Part IV:

Yakima River is located down gradient; sunnyside canal located North of well.

2) Aquifer Material:

A) Does the drilling log, well log or other geologic/engineering reports identify that the well is located in an area where the underground conditions are identified as fractured rock and/or basalt terrain?

___ YES X NO

B) Does the drilling log, well log or other geologic/engineering reports indicate that the well is located in an area where the underground conditions are primarily identified as coarse sand and gravel? No log on this well, but other well in area would indicate this.

X YES ___ NO

3) Is the source located in an aquifer with a high horizontal flow rate? (These can include sources located on flood plains of large rivers, artesian wells with high water pressure, and/or shallow flowing wells and springs...

___ YES _X_ NO

4) Are there other high capacity wells (agricultural, municipal and/or industrial) located within the CFRs?

a) Presence of ground water extraction wells removing more than approximately 500 gal/min within...

	YES	NO	unknown
< 6 month travel time	___	___	___
6 month–1 year travel time	___	___	___
1–5 year travel time	___	___	___
5–10 year travel time	___	X	___

b) Presence of ground water recharge wells (dry wells) or heavy irrigation within...

	YES	NO	unknown
< 1 year travel time	___	___	___
1–5 year travel time	___	___	___
5–10 year travel time	X	___	___

Please identify or describe additional hydrologic or geographic conditions that you believe may affect the shape of the zone of contribution for this source. Where possible, reference them to locations on the map produced in Part IV.

Unknown

Suggestions and Comments

Did you attend one of the susceptibility workshops? ___ YES _X_ NO

Did you find it useful? ___ YES ___ NO

Did you seek outside assistance to complete the assessment? _X_ YES ___ NO

This form and instruction packet are still in the process of development. Your comments, suggestions and questions will help us upgrade and improve this assessment form. If you found particular sections confusing or problematic please let us know. How could this susceptibility assessment be improved or made clearer? Did the instruction package help you find the information needed to complete the assessment? How much time did it take you to complete the form? Were you able to complete the assessment without additional/outside expertise? Do you feel the assessment was valuable as a learning experience? Any other comments or constructive criticisms you have would be appreciated.

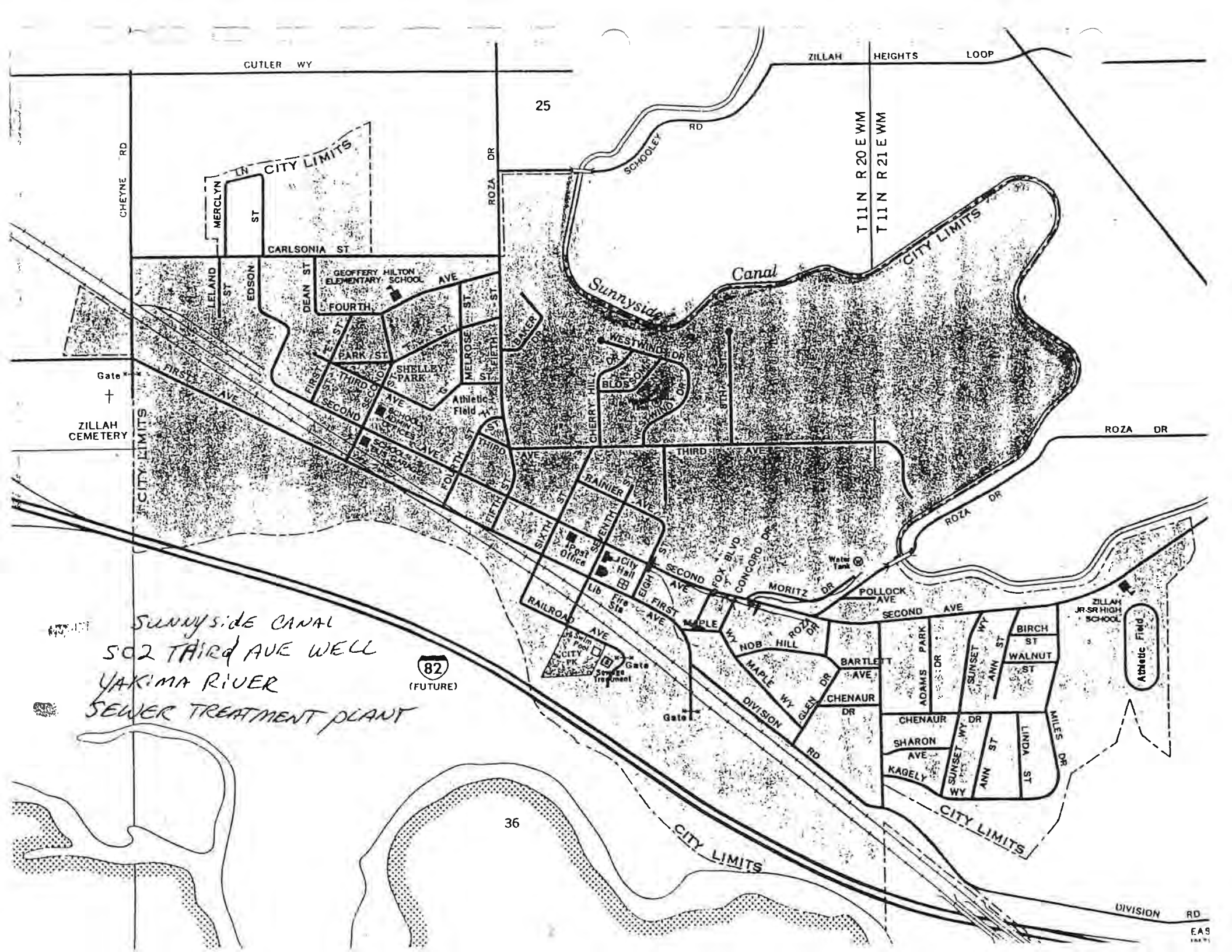
CUTLER WY
ZILLAH HEIGHTS LOOP
25
CHEYNE RD
CITY LIMITS
MERCLYN ST
CARLSONIA ST
ROZA DR
SCHOOLEY RD
T 11 N R 20 E WM
T 11 N R 21 E WM
CITY LIMITS
Sunnyside Canal
LELAND ST
EDSON ST
DEAN ST
GEOFFERY HILTON ELEMENTARY SCHOOL
FOURTH AVE
PARK ST
SHELLEY PARK
MELROSE ST
BAKER DR
WESTWIND DR
BLOSSOM DR
CHERRY HILL
Gate
FIRST AVE
ZILLAH CEMETERY
CITY LIMITS
SECOND AVE
THIRD AVE
Athletic Field
SCHOOL ADMIN OFFICES
SCHOOL BUS GARAGE
FOURTH AVE
FIFTH ST
SIXTH ST
SEVENTH ST
RAINIER AVE
ROZA DR
Post Office
City Hall
Lib
Fire Sta
RAILROAD AVE
CITY PK
Swim Pool
Gate
Sewage Treatment
EIGHTH ST
FIRST AVE
SECOND AVE
FOX BLVD
CONCORD DR
MORITZ DR
Water Tank
POLLOCK AVE
ZILLAH JR-SR HIGH SCHOOL
Athletic Field
MAPLE WY
NOB HILL ROZA DR
MAPLE GLEN DR
BARTLETT AVE
CHENAUR DR
DIVISION RD
ADAMS PARK DR
SUNSET WY
ANN ST
BIRCH ST
WALNUT ST
CHENAUR DR
SHARON AVE
KAGELY
SUNSET WY
ANN ST
LINDA ST
MILES DR
CITY LIMITS
CITY LIMITS
DIVISION RD
82
(FUTURE)
SUNNYSIDE CANAL
502 THIRD AVE WELL
YAKIMA RIVER
SEWER TREATMENT PLANT
36

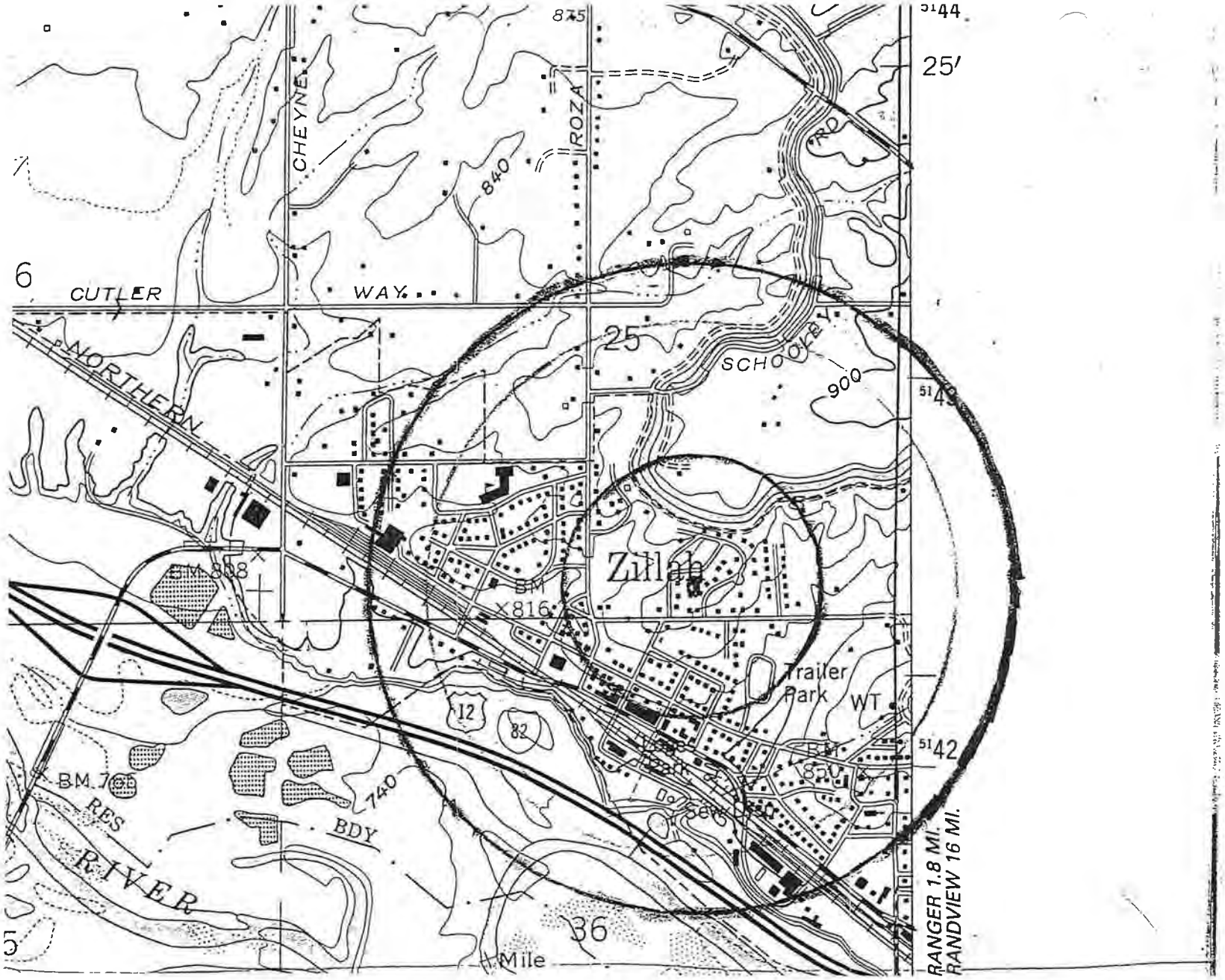

- 3RD AVE WELL. 502
- 5 YRS
  1 YRS
  6 MO

SUSCEPTIBILITY ASSESSMENT SURVEY FORM - WIPPCO WELL

COPY

Ground Water Contamination Susceptibility Assessment Survey Form

Version 2.1b

IMPORTANT! Please complete one form for each ground water source (well, wellfield, spring) used in your water system. Photocopy as necessary.

PART I: System Information

Water owner/manager : City of Zillah

Water system name : City of Zillah

County: Yakima

Water system number: 99800 W Source number: S03

Well depth: 260' (ft.) (*From WFI form*)

Source name: Whippco well

WA well identification tag number: ___ ___ ___-___ ___ ___

__X__ well not tagged

Number of connections: 885 Population served: 2080

Township: 11 Range: 20 E W.M

Section: 25 1/4-1/4 Section: SW 1/4 of SW 1/4

Latitude/longitude (if available): 46°, 24', 23" , 120°, 16', 06"

How was lat./long. determined?

_____ global positioning device _____ survey __X__ topographic map

____other: _____

- Please refer to Assistance Packet for details and explanations of all questions in Parts II through V.

PART II: **Well Construction and Source Information**

1) Date well originally constructed: 9 / 1 /42 month/day/year

last reconstruction: 1 / 10 /95 month/day/year

_____ information unavailable

2) Well driller: _____

_____

_____

_X_ well driller unknown

3) Type of well:

_X_ Drilled: ___ rotary ___ bored _X_ cable (percussion) ___ Dug

___ Other: ___ spring(s) ___ lateral collector (Ranney)

___ driven ___ jetted ___ other: _____

Additional comments: _____

_____

4) Well report available? ___ YES (attach copy to form) _X_ NO

If no well log is available, please attach any other records documenting well construction; e.g. boring logs, "as built" sheets, engineering reports, well reconstruction logs.

5) Average pumping rate: 750 (gallons/min)

Source of information: Ponderosa pump system Inc.

If not documented, how was pumping rate determined? Test pumped the well 11-23-94; Also meter at well site

___ Pumping rate unknown

6) Is this source treated? NO

If so, what type of treatment:

___ disinfection ___ filtration ___ carbon filter ___ air stripper ___ other

Purpose of treatment (describe materials to be removed or controlled by treatment):

_____

_____

7) If source is chlorinated, is a chlorine residual maintained: ___ YES ___ NO

Residual level: _____ (*At the point closest to the source.*)

Sanitary setback:

X < 100 ft* ___ 100–120 ft ___ 120–200 ft ___ > 200 ft
* if less than 100 ft describe the site conditions:

50' from mini storage

Wellhead construction:

X wellhead enclosed in a wellhouse

X controlled access (describe): Locked door

___ other uses for wellhouse (describe): _____

___ no wellhead control

9) Surface seal:

___ 18 ft

___ < 18 ft (no Department of Ecology approval) ('< ' *means less than*)

___ < 18 ft (Approved by Ecology, include documentation) ('< ' *means less than*)

___ > 18 ft ('> ' *means greater than*)

X depth of seal unknown

___ no surface seal

___

10) Annual rainfall (inches per year):

X < 10 in/yr ___ 10–25 in/yr ___ > 25 in/yr

PART IV: Mapping Your Ground Water Resource

1) Annual volume of water pumped: 570350 (gallons)

~~How was this determined?~~

X meter

___ estimated: ___ pumping rate (750)

___ pump capacity (750)

X other: This is a back-up we use only as needed.

2) "Calculated Fixed Radius" estimate of ground water movement:
(see Instruction Packet)

6 month ground water travel time : 140 (ft)

1 year ground water travel time : 200 (ft)

5 year ground water travel time: 440 (ft)

10 year ground water travel time: 620 (ft)

Information available on length of screened/open interval?

X YES ___ NO

Length of screened/open interval: 122', 126', 127 (ft)

3) Is there a river, lake, pond, stream, or other obvious surface water body within the 6 month time of travel boundary? ___ YES X NO (mark and identify on map).

4) Is there a stormwater and/or wastewater facility, treatment lagoon, or holding pond located within the 6 month time of travel boundary? ___ YES X NO (mark and identify on map).

Comments: Waste water treatment plant is located at a down gradient elevation 800'.

PART V: Assessment of Water Quality

Regional sources of risk to ground water:

Please indicate if any of the following are present within a circular area around your water source having a radius up to and including the five year ground water travel time:

	6 month	1 year	5 year	unknown
likely pesticide application	____	____	____	X
stormwater injection wells	____	____	____	X
other injection wells	____	____	____	X
abandoned ground water well	____	____	____	X
landfills, dumps, disposal areas	____	____	____	X
known hazardous materials clean-up site	____	____	____	X
water system(s) with known quality problems	____	____	____	X
population density > 1 house/acre	X	X	X	____
residences commonly have septic tanks	____	____	____	X
Wastewater treatment lagoons	____	____	____	X
sites used for land application of waste	____	____	____	X

Mark and identify on map any of the risks listed above which are located within the 6 month time of travel boundary? (*Please include a map of the wellhead and time of travel areas with this form. Please locate and mark any of the following.*) NONE

If other recorded or potential sources of ground water contamination exist within the ten year time of travel circular zone around your water supply, please describe:

Waste water treatment plant is at a down gradient elevation 800'.

2) Source specific water quality records:

Please indicate the occurrence of any test results since 1986 that meet the following conditions: (Unless listed on assessment, MCLs are listed in assistance package.)

A. Nitrate: (Nitrate MCL = 10 mg/l)	YES	NO
Results greater than MCL	___	X
< 2 mg/liter nitrate	___	___
2-5 mg/liter nitrate	___	X
> 5 mg/liter nitrate	___	___
___ Nitrate sampling records unavailable		

B. VOCs: (VOC detection level 0.5 ug/l or 0.0005 mg/l.)	YES	NO
Results greater than MCL or SAL	___	___
VOCs detected at least once	___	___
VOCs never detected	___	X
___ VOC sampling records unavailable		

C. EDB/DBCP:	YES	NO
(EDB MCL = 0.05 ug/l or 0.00005 mg/l. DBCP MCL = 0.2 ug/l or 0.0002 mg/l.)		
EDB/DBCP detected below MCL at least once	___	___
EDB/DBCP detected above MCL at least once	___	___
EDB/DBCP never detected	___	X
___ EDB/DBCP tests required but not yet completed		
___ EDB/DBCP tests not required		

D. Other SOCs (Pesticides):	YES	NO
Other SOCs detected (pesticides and other synthetic organic chemicals)	___	___
___ Other SOC tests performed but none detected (list test methods in comments		
X Other SOC tests not performed		

If any SOCs in addition to EDB/DBCP were detected, please identify and date. If other SOC tests were performed, but no SOCs detected, list test methods here: _____

_____

_____

_____

E. Bacterial contamination:

	YES	NO
Any bacterial detection(s) in the past 3 years in samples taken from the source (not distribution sampling records).	____	X
Has source (in past 3 years) had a bacteriological contamination problem found in distribution samples that was attributed to the source.	____	X

___ Source sampling records for bacteria unavailable

Part VI: **Geographic or Hydrologic Factors Contributing to a Non-Circular Zone of Contribution**

The following questions will help identify those ground water systems which may not be accurately represented by the calculated fixed radius (CFR) method described in Part IV. For these sources, the CFR areas should be used as a preliminary delineation of the critical time of travel zones for that source. As a system develops its Wellhead Protection Plan for theses sources, a more detailed delineation method should be considered.

1) Is there evidence of obvious hydrologic boundaries within the 10 year time of travel zone of the CFR? (Does the largest circle extend over a stream, river, lake, up a steep hillside, and/or over a mountain or ridge?)

X YES ___ NO

Describe with references to map produced in Part IV:

Yakima River is located down gradient Sunnyside canal located North of well

2) Aquifer Material:

A) Does the drilling log, well log or other geologic/engineering reports identify that the well is located in an area where the underground conditions are identified as fractured rock and/or basalt terrain?

___ YES X NO

B) Does the drilling log, well log or other geologic/engineering reports indicate that the well is located in an area where the underground conditions are primarily identified as coarse sand and gravel?

X YES ___ NO

Suggestions and Comments

Did you attend one of the susceptibility workshops? ___ YES X NO

Did you find it useful? ___ YES ___ NO

Did you seek outside assistance to complete the assessment? X YES ___ NO

This form and instruction packet are still in the process of development. Your comments, suggestions and questions will help us upgrade and improve this assessment form. If you found particular sections confusing or problematic please let us know. How could this susceptibility assessment be improved or made clearer? Did the instruction package help you find the information needed to complete the assessment? How much time did it take you to complete the form? Were you able to complete the assessment without additional/outside expertise? Do you feel the assessment was valuable as a learning experience? Any other comments or constructive criticisms you have would be appreciated.

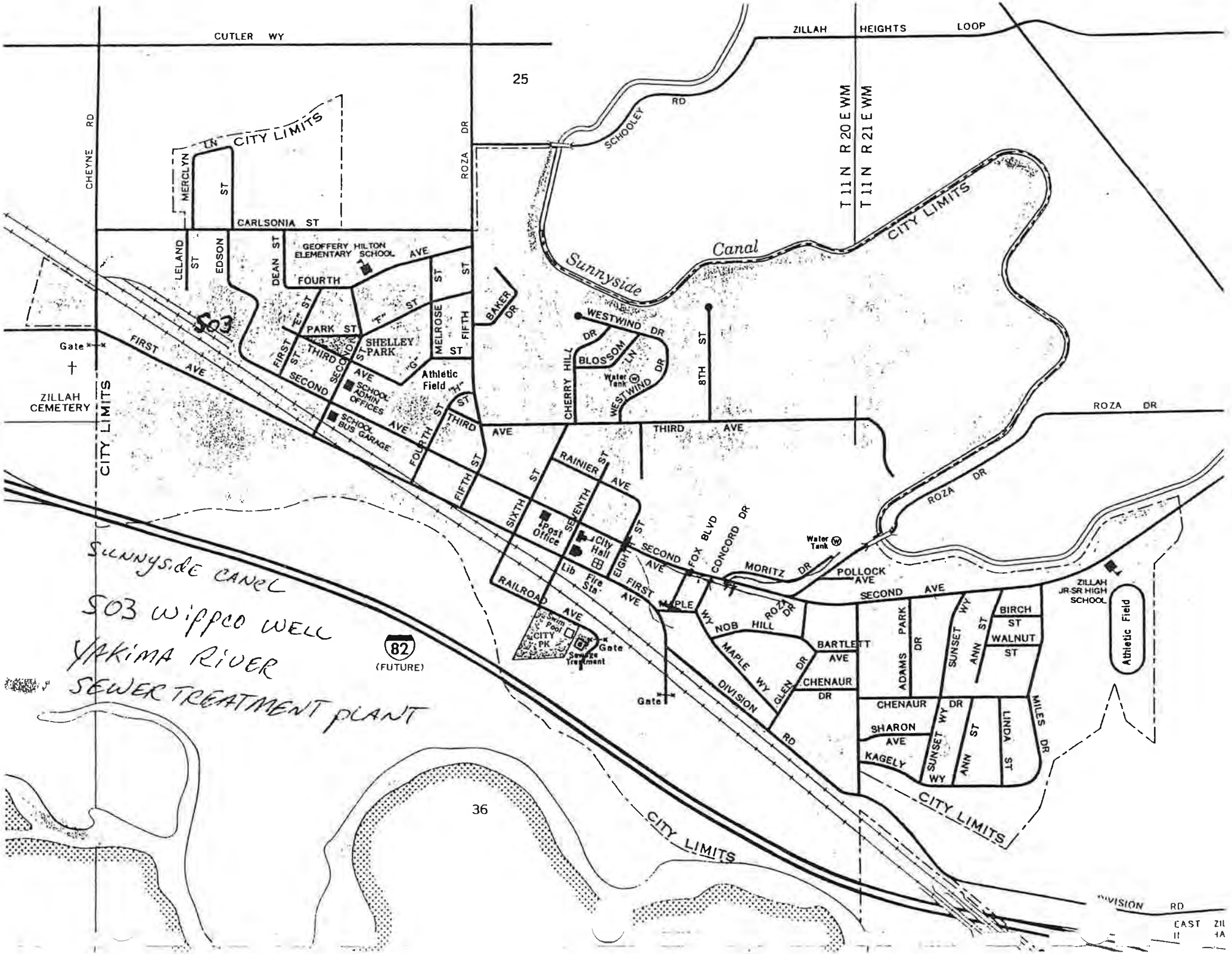
CUTLER WY
ZILLAH HEIGHTS LOOP
25
CHEYNE RD
ROZA DR
SCHOOLEY RD
T 11 N R 20 E WM
T 11 N R 21 E WM
CITY LIMITS
MERCLYN LN
ST
CARLSONIA ST
LELAND ST
EDSON
DEAN ST
GEOFFERY HILTON ELEMENTARY SCHOOL
FOURTH AVE
PARK ST
"F" ST
MELROSE ST
FIFTH ST
BAKER DR
Sunnyside Canal
WESTWIND DR
BLOSSOM LN
CHERRY HILL
Water Tank
8TH ST
S03
Gate
FIRST AVE
SHELLEY PARK
"G"
Athletic Field
"H"
SECOND AVE
SCHOOL ADMIN OFFICES
SCHOOL BUS GARAGE
ZILLAH CEMETERY
THIRD AVE
FOURTH ST
FIFTH ST
RAINIER AVE
SIXTH ST
SEVENTH ST
Post Office
City Hall
Lib
Fire Sta
EIGHTH ST
FOX BLVD
CONCORD DR
MORITZ DR
POLLOCK AVE
RAILROAD AVE
Swim Pool
CITY PK
Sewage Treatment
MAPLE WY
NOB HILL
ROZA DR
BARTLETT AVE
CHENAUR DR
GLEN DR
DIVISION RD
ADAMS PARK DR
SUNSET WY
ANN ST
BIRCH ST
WALNUT ST
ZILLAH JR-SR HIGH SCHOOL
Athletic Field
SHARON AVE
KAGELY WY
LINDA ST
MILES DR
82
(FUTURE)
Sunnyside Canal
S03 Wippco Well
Yakima River
Sewer Treatment Plant
36
CITY LIMITS
DIVISION RD
EAST

USGS GROUNDWATER STATUS AND TRENDS FOR THE COLUMBIA PLATEAU REGIONAL AQUIFER SYSTEM, WASHINGTON, OREGON, AND IDAHO

USGS
science for a changing world

U.S. Geological Survey Groundwater Resources Program and
prepared in cooperation with the Oregon Water Resources Department

Groundwater Status and Trends for the Columbia Plateau Regional Aquifer System, Washington, Oregon, and Idaho

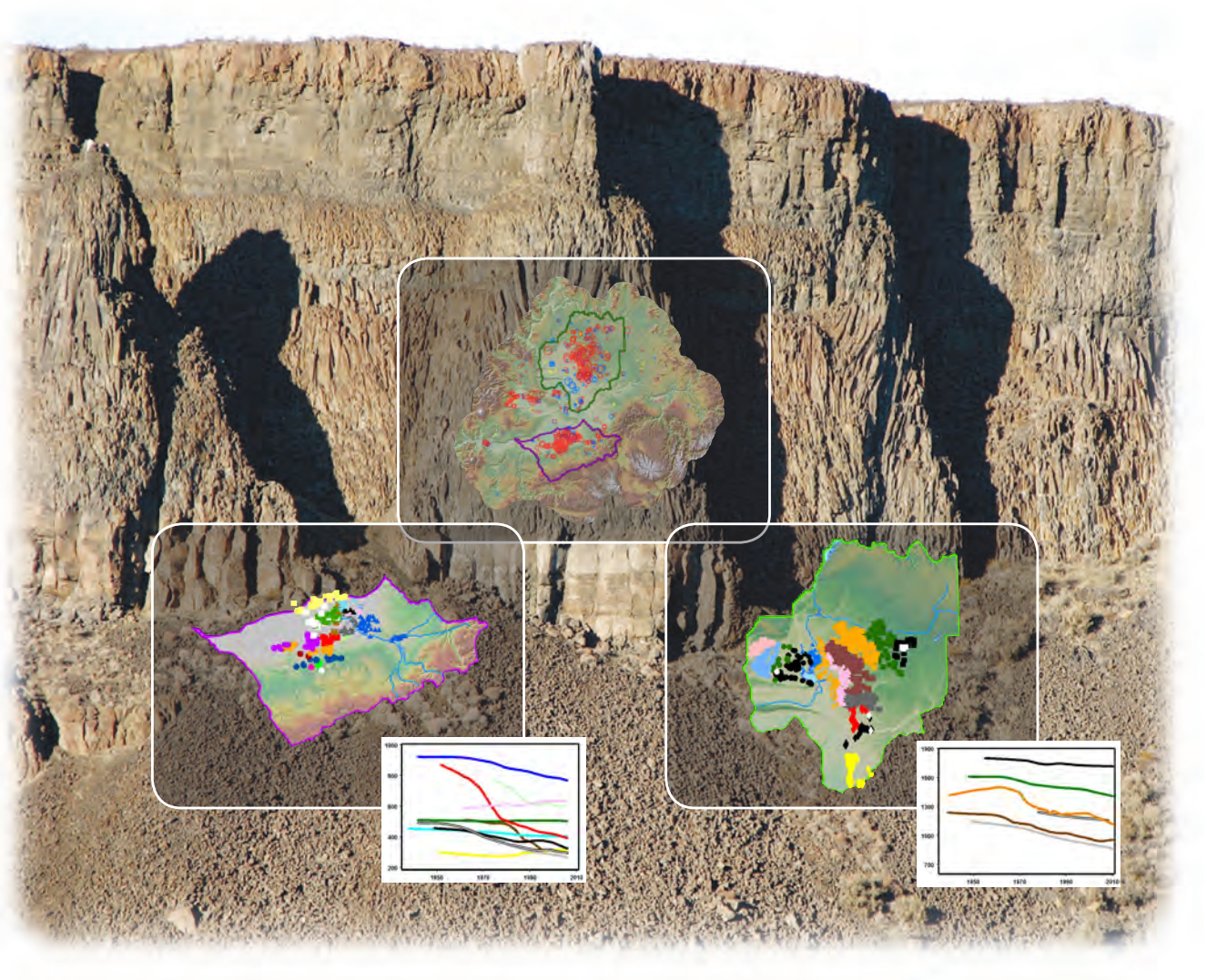

Scientific Investigations Report 2012–5261

U.S. Department of the Interior
U.S. Geological Survey

Cover: Lower left: Map showing select groups of wells with similar hydraulic response within portions of the Umatilla Basin, Oregon. Hydrographs showing the trend lines of spring median water levels for select groups of wells with similar hydraulic response in the Umatilla Basin, Oregon (East-West groups). (See figures 10 and 11*B*, respectively, in the report.)

Center foreground: Map showing distribution of groundwater-level trends in the Columbia Plateau Regional Aquifer System for the period 1968–2009. Red circles indicate groundwater-level declines, yellow circles indicate little or no change in groundwater levels, and blue circles indicate groundwater-level rises. Circle size is representative of magnitude of change. (See figure 8 in the report.)

Lower right: Map showing select groups of wells with similar hydraulic response within portions of the Palouse Slope and the Columbia Basin Ground Water Management Area, Washington. Hydrographs showing the trend lines of spring median water levels for groups of wells with similar hydraulic response in the vicinity of the Palouse Slope and the Columbia Basin Ground Water Management Area, Washington (Eastern Flowpath groups). (See figures 15 and 17, respectively, in the report)

Background: Photograph of Frenchman's Coulee in the vicinity of Quincy, Washington. (Photograph taken by Peter Prehn, private citizen, 2008. Used with permission.)

Groundwater Status and Trends for the Columbia Plateau Regional Aquifer System, Washington, Oregon, and Idaho

By Erick R. Burns, Daniel T. Snyder, Jonathan V. Haynes, and Michael S. Waibel

U.S. Geological Survey Groundwater Resources Program and
prepared in cooperation with the Oregon Water Resources Department

Scientific Investigations Report 2012–5261

U.S. Department of the Interior
U.S. Geological Survey

U.S. Department of the Interior
KEN SALAZAR, Secretary

U.S. Geological Survey
Marcia K. McNutt, Director

U.S. Geological Survey, Reston, Virginia: 2012

For more information on the USGS—the Federal source for science about the Earth, its natural and living resources, natural hazards, and the environment, visit http://www.usgs.gov or call 1–888–ASK–USGS.

For an overview of USGS information products, including maps, imagery, and publications, visit http://www.usgs.gov/pubprod

To order this and other USGS information products, visit http://store.usgs.gov

Any use of trade, product, or firm names is for descriptive purposes only and does not imply endorsement by the U.S. Government.

Although this report is in the public domain, permission must be secured from the individual copyright owners to reproduce any copyrighted materials contained within this report.

Suggested citation:
Burns, E.R, Snyder, D.T, Haynes, J.V., and Waibel, M.S., 2012, Groundwater status and trends for the Columbia Plateau Regional Aquifer System, Washington, Oregon, and Idaho: U.S. Geological Survey Scientific Investigations Report 2012–5261, 52 p., http://pubs.er.usgs.gov/publication/sir20125261.

Contents

Abstract....1
Introduction....2
Purpose and Scope....2
Description of Study Area....4
Hydrogeologic Setting....4
Hydrogeologic Characteristics....5
Hydrologic Budget Components....7
Groundwater Occurrence and Movement....7
Study Methods....8
Sources of Data....8
Groundwater-Level Information....8
Geologic Model....10
Data Limitations....10
Measurement Accuracy and Data Compilation....10
Representative Sampling....10
Localized Conditions and Stresses....11
Influence of Well Construction....11
Commingling....12
Groundwater Status and Trends....15
Umatilla Area, Oregon....18
Palouse Slope/Eastern Yakima Fold Belt, Washington....28
Summary and Conclusions....43
Acknowledgments....45
Selected References....45
Appendix A. Interpretation Guide for Graphs of Stratigraphic Position Compared with Hydraulic Head for Wells in the Columbia River Basalt Group, Washington, Oregon, and Idaho....49

Figures

Figure 1. Map showing location of Columbia Plateau Regional Aquifer System of Washington, Oregon, and Idaho 3
Figure 2. Map showing surficial geology and structures of the Columbia Plateau Regional Aquifer System, Washington, Oregon, and Idaho 6
Figure 3. Map showing locations of wells with usable water-level data within or immediately adjacent to the Columbia Plateau Regional Aquifer System, Washington, Oregon, and Idaho, subsets of which were used for analysis in this study 9
Figure 4. Diagram showing effect of commingling on water levels in hypothetical wells for aquifers of equal transmissivity 12
Figure 5. Diagram showing effect of commingling on water levels in hypothetical wells for aquifers of unequal transmissivity 13
Figure 6. Diagram showing effect of commingling on water levels in hypothetical wells for aquifers with local variability 14
Figure 7. Map showing distribution of wells used for status and trends analysis for the Columbia Plateau Regional Aquifer System, Washington, Oregon, and Idaho 16
Figure 8. Map showing distribution of groundwater-level trends in the Columbia Plateau Regional Aquifer System, Washington, Oregon, and Idaho, for 1968–2009 17
Figure 9. Map showing distribution of groundwater-level trends for 1968–2009 in Oregon Water Resources Department administrative areas in the Umatilla Basin, Oregon 19
Figure 10. Map showing groups of wells with similar hydraulic response near the Oregon Water Resources Department administrative areas in the Umatilla Basin, Oregon 20
Figure 11. Hydrographs showing groups of wells near the Oregon Water Resources Department administrative areas in the Umatilla Basin, Oregon 21
Figure 12. Graphs showing estimated stratigraphic position (distance from the well bottom to the simulated top of Grande Ronde Basalt) compared with winter median water-level elevation in selected wells within and immediately adjacent to the Oregon Water Resources Department administrative areas in the Umatilla Basin, Oregon, 1968, 1984, and 2006 23
Figure 13. Graph showing stratigraphic position (distance from the well bottom to the simulated top of Grande Ronde Basalt) compared with winter median water level measured in wells for shallow–deep well pairs from groups 3 and 14 near the Oregon Water Resources Department administrative areas in the Umatilla Basin, Oregon 27
Figure 14. Map showing distribution of groundwater-level trends for 1968–2009 relative to the Washington State Department of Ecology administrative areas in parts of the Palouse Slope/eastern Yakima Fold Belt and the Columbia Basin Ground Water Management Area, Washington 29
Figure 15. Map showing generalized groundwater-flow paths under 2000–2010 conditions through sets of well groups with similar hydraulic response near the Washington State Department of Ecology administrative areas in parts of the Palouse Slope/eastern Yakima Fold Belt and the Columbia Basin Ground Water Management Area, Washington 30

Figures—Continued

Figure 16. Hydrographs showing groups of wells corresponding to the western flow path near the Washington State Department of Ecology administrative areas in parts of the Palouse Slope/eastern Yakima Fold Belt and the Columbia Basin Ground Water Management Area, Washington 31
Figure 17. Hydrographs showing groups of wells corresponding to the eastern flow path near the Washington State Department of Ecology administrative areas in parts of the Palouse Slope/eastern Yakima Fold Belt and the Columbia Basin Ground Water Management Area, Washington 32
Figure 18. Hydrographs showing the middle groups of wells near the Washington State Department of Ecology administrative areas in parts of the Palouse Slope/eastern Yakima Fold Belt and the Columbia Basin Ground Water Management Area, Washington 33
Figure 19. Hydrographs showing groups of wells corresponding to the southern flow path near the Washington State Department of Ecology administrative areas in parts of the Palouse Slope/eastern Yakima Fold Belt and the Columbia Basin Ground Water Management Area, Washington 34
Figure 20. Graphs showing distance of the well bottom from the simulated top of Grande Ronde Basalt compared with water levels measured in wells near the Washington State Department of Ecology administrative areas in parts of the Palouse Slope/eastern Yakima Fold Belt and the Columbia Basin Ground Water Management Area, Washington 36
Figure 21. Map showing generalized potentiometric surface for measured Columbia River Basalt Group aquifer conditions during the pre-development period in parts of the Palouse Slope/eastern Yakima Fold Belt and the Columbia Basin Ground Water Management Area, Washington 41
Figure 22. Map showing generalized potentiometric surface for measured Columbia River Basalt Group aquifer conditions during 2000–2009 in parts of the Palouse Slope/eastern Yakima Fold Belt and the Columbia Basin Ground Water Management Area, Washington 42

Conversion Factors, Datums, and Abbreviations and Acronyms

All conversion factors have been rounded to four significant digits. To reduce errors resulting from rounded conversion factors, reverse conversions should multiply by the inverse of the conversion factors originally used. For example, to convert feet into meters multiply by 0.3048. To convert meters into feet multiply by 1/0.3048.

Conversion Factors

Inch/Pound to SI

Multiply	By	To obtain
	Length	
inch (in.)	2.54	centimeter (cm)
inch (in.)	25.4	millimeter (mm)
foot (ft)	0.3048	meter (m)
mile (mi)	1.609	kilometer (km)
	Area	
square mile (mi^2)	259.0	hectare (ha)
square mile (mi^2)	2.590	square kilometer (km^2)
	Volume	
acre-foot (acre-ft)	1,233	cubic meter (m^3)
	Flow rate	
acre-foot per year (acre-ft/yr)	1,233	cubic meter per year (m^3/yr)
foot per day (ft/d)	0.3048	meter per day (m/d)
foot per year (ft/yr)	0.3048	meter per year (m/yr)
inch per year (in/yr)	25.4	millimeter per year (mm/yr)
	Hydraulic conductivity	
foot per day (ft/d)	0.3048	meter per day (m/d)

SI to Inch/Pound

Multiply	By	To obtain
	Length	
meter (m)	3.281	foot (ft)

Datums

Vertical coordinate information is referenced to the North American Vertical Datum of 1988 (NAVD 88). Vertical coordinate information for historical data collected and stored as National Geodetic Vertical Datum of 1929 (NGVD 29) has been converted to NAVD 88 for this publication. Conversion between NAVD 88 and the commonly used NGVD 29 varies spatially; however, over most of the study area the following conversion can be used:

NGVD 29 = NAVD 88 – 3.6 feet.

This conversion generally is accurate within about ± 0.5 feet for 95 percent of the study area. The reader is directed to either the National Geodetic Survey Web site for VERTCON at http://www.ngs.noaa.gov/TOOLS/Vertcon/vertcon.html or the U.S. Army Corps of Engineers Web site for Corpscon at http://www.agc.army.mil/corpscon for more accurate conversions.

Horizontal coordinate information is referenced to the North American Datum of 1983 (NAD 83). Horizontal coordinate information for historical data collected and stored as North American Datum of 1927 (NAD 27) has been converted to NAD 83 for this publication. Conversion between NAD 83 and the commonly used NAD 27 varies spatially, and the difference in horizontal positions can be greater than 300 feet within the study area. For assistance with conversions, the reader is directed to either the National Geodetic Survey Web site for NADCON at http://www.ngs.noaa.gov/TOOLS/Nadcon/Nadcon.html or the U.S. Army Corps of Engineers Web site for Corpscon at http://www.agc.army.mil/corpscon.

Elevation, as used in this report, refers to distance above the vertical datum.

Abbreviations and Acronyms

Abbreviation or Acronym	Definition
CPRAS	Columbia Plateau Regional Aquifer System
CRBG	Columbia River Basalt Group
eYFB	eastern Yakima Fold Belt
GWMA	Columbia Basin Ground Water Management Area
MAF	million acre-feet
NWIS	National Water Information System
OWRD	Oregon Water Resources Department
SOWAT	SOil WATer balance model
USGS	U.S. Geological Survey
WADOE	Washington State Department of Ecology

This page is intentionally blank.

Groundwater Status and Trends for the Columbia Plateau Regional Aquifer System, Washington, Oregon, and Idaho

By Erick R. Burns, Daniel T. Snyder, Jonathan V. Haynes, and Michael S. Waibel

Abstract

Well information and groundwater-level measurements for the Columbia Plateau Regional Aquifer System in Washington, Oregon, and Idaho, were compiled from data provided by the U.S. Geological Survey and seven other organizations. From the full set of about 60,000 wells and 450,000 water-level measurements a subset of 761 wells within the aquifers of the Columbia River Basalt Group (CRBG) then was used to develop a simple linear groundwater-level trend map for 1968–2009. The mean of the trends was a decline of 1.9 feet per year (ft/yr), with 72 percent of the water levels in wells declining. Rates of declines greater than 1.0 ft/yr were measured in 50 percent of wells, declines greater than 2.0 ft/yr in 38 percent of wells, declines greater than 4.0 ft/yr in 29 percent of wells, and declines greater than 8.0 ft/yr in 4 percent of wells.

Water-level data were used to identify groups of wells with similar hydraulic heads and temporal trends to delineate areas of overall similar groundwater conditions. Discontinuities in hydraulic head between well groups were used to help infer the presence of barriers to groundwater flow such as changes in lithology or the occurrence of folds and faults. In areas without flow barriers, dissimilarities in response of well groups over time resulted from the formation of groundwater mounds caused by recharge from irrigation or regions of decline caused by pumping. The areas of focus for this analysis included the Umatilla area, Oregon, and the Palouse Slope/eastern Yakima Fold Belt in the Columbia Basin Ground Water Management Area (GWMA) consisting of Adams, Franklin, Grant, and Lincoln Counties, Washington.

In the Umatilla area, water levels from 286 wells were used to identify multiple areas of high hydraulic gradient that indicate vertical and horizontal barriers to groundwater flow. These barriers divide the groundwater-flow system into several compartments with varying degrees of interconnection. Horizontal flow barriers commonly correspond to mapped geologic structure and result in horizontal hydraulic gradients that progressively become steeper from north to south corresponding to an increase in structural complexity that may be impeding recharge from the uplands into the heavily developed areas.

Most CRBG aquifers in the Umatilla area are declining and since 1970, cumulative declines range from about 100 to 300 feet. Significant vertical hydraulic gradients are documented for relatively small areas near Umatilla, and since the 1970s, downward vertical gradients in these areas have been increasing as hydraulic heads in the deeper units have declined. The absence of vertical gradients over much of the area may be a consequence of flow through commingling wells that results in the equilibration of the heads between aquifers.

On the Palouse Slope in the central GWMA, large groundwater declines occurred during 1968–2009 along a north-south swath in the middle of the region. An analysis of 1,195 wells along major flow paths and through the area of persistent groundwater-level declines indicates that barriers to flow are not as evident in this area as in Umatilla. This is consistent with the geologic interpretation of the Palouse Slope as being a gently folded structure created by voluminous sheet flows of CRBG lavas. Groundwater discharge into the sediment-filled coulees, where the upper aquifers are intersected at land surface by incised canyons, is proposed as an alternative to explain local steepening of the hydraulic gradient along the Palouse Slope previously attributed to the presence of a groundwater dam. Comparison of generalized potentiometric surface maps developed for pre-development conditions and post-2000 conditions indicate that pre-development groundwater flow was from the uplands toward the Columbia and Snake River and that post-2000 flow patterns in the area are controlled by irrigation practices that have resulted in broad regions of elevated or depressed hydraulic head. In some cases, irrigation-related changes in head have reversed groundwater flow directions. Evidence of significant vertical hydraulic gradients exists, although much of the aquifer thickness is affected by commingling of wells. The effect of commingling and its relative contribution to problems related to groundwater-level declines remains unclear.

Introduction

The Columbia Plateau Regional Aquifer System (CPRAS) covers about 44,000 mi^2 of southeastern Washington, northeastern Oregon, and western Idaho (fig. 1). The population of the region is more than 1.3 million people (U.S. Census Bureau, 2000), and an important agricultural industry valued in the billions of dollars annually has developed despite the arid to semi-arid climate and limited access to surface-water resources. Groundwater availability in the aquifers of the area is a critical water-resource management issue because of the high demand of water for agriculture, economic development, and ecological needs. Groundwater levels have declined throughout much of the Columbia Plateau (Whiteman and others, 1994, p. B61–B65; Porcello and others, 2009; Burns and others, 2012). A comparison of water-level measurements from 1984 and 2009 from 470 wells in the CPRAS indicates that water levels declined in 83 percent of the wells and that declines were greater than 25 ft in 29 percent of the wells (Snyder and Haynes, 2010).

The primary aquifers of the CPRAS are basalts of the Columbia River Basalt Group (CRBG) and in places, overlying basin-fill sediments. Water-resources issues that have implications for current and future groundwater availability in the region include (1) widespread water-level declines associated with development of groundwater for irrigation and other uses; (2) reduction in base flow to rivers and associated effects on water temperature, water quality, fish, and other aquatic organisms; and (3) current and anticipated effects of global climate change on recharge, base flow, demand, and ultimately, groundwater availability.

The U.S. Geological Survey (USGS) Groundwater Resources Program began a study of the CPRAS in 2007 with the broad goals of (1) characterizing the hydrologic status of the system, (2) identifying trends in groundwater storage and use, and (3) quantifying groundwater availability. The study approach includes updating the regional geologic and hydrogeologic frameworks, documenting changes in the hydrologic status of the system, quantifying the hydrologic budget, and developing a groundwater-flow model for the system. The model, which will be outlined in a separate report, will be used to evaluate and test the conceptual model of the groundwater flow within the system and to evaluate groundwater availability. This report, which describes the relation between groundwater levels and trends and hydrogeologic controls, along with four recently published reports (Kahle and others, 2009; Snyder and Haynes, 2010; Burns and others, 2011; Kahle and others, 2011), provides comprehensive information about the physical hydrogeologic framework of the CPRAS based on historical and current investigations. This study, in part, relied on data collection and analysis conducted as part of a cooperative agreement between the USGS and the Oregon Water Resources Department to better define the hydrologic conditions in the Umatilla basin of Oregon.

Purpose and Scope

The purpose of this report is to describe the compilation of groundwater-level data for the CPRAS that will be used for comparison with a numerical groundwater-flow model and to evaluate the status and trends in the data and their relation to hydrogeologic controls that influence the hydraulic properties of the aquifer or hydraulic stresses from recharge or pumping. The scope of this report includes a regional assessment of the importance of these controls described through the presentation of maps of groundwater elevations, water-level changes, stresses, and hydrogeologic features in the CPRAS. This information will help to develop a broad understanding of how climatic, anthropogenic, and hydrogeologic factors combine to influence groundwater flow, and how climate change and groundwater development may influence the sustainability and availability of the water supply in the region. The analyses presented in this report generally are restricted to the primary CRBG aquifers within the CPRAS to demonstrate important features in key areas, and do not seek to be an exhaustive analysis of any area.

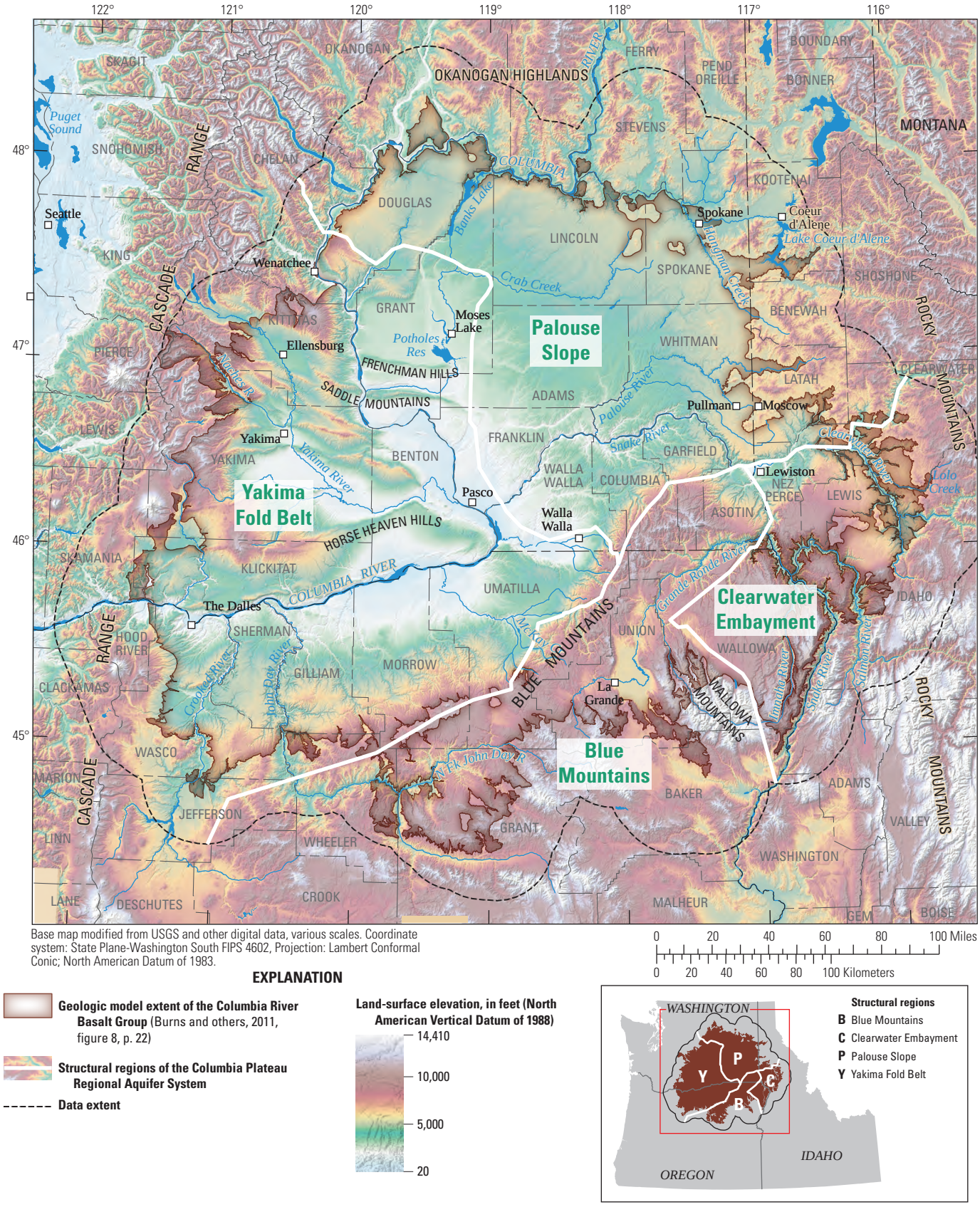

Figure 1. Location of Columbia Plateau Regional Aquifer System of Washington, Oregon, and Idaho.

Description of Study Area

A complete description of the Columbia Plateau is available in Kahle and others (2011), parts of which are presented here. The Columbia Plateau (fig. 1) is a structural and topographic basin within the drainage of the Columbia River basin. It is bounded on the west by the Cascade Range, on the east by the Rocky Mountains, on the north by the Okanogan Highlands, and on the south by the Blue Mountains. The Columbia Plateau is underlain by massive basalt flows with thickness estimated to exceed 16,000 ft near Pasco, Washington (Reidel and others, 2002, p. 211, fig. 2.6). Sedimentary deposits locally exceeding 2,000 ft in thickness overlie the basalt over large areas of the plateau.

The Columbia Plateau was divided into four informal physiographic subprovinces that represent structural regions—the Yakima Fold Belt, Blue Mountains, Palouse Slope subprovinces, and the Clearwater Embayment (fig. 1). Groundwater characteristics in each of these regions can be different because of variations in stratigraphy, depositional environment, and post-deposition folding and faulting. The presence and importance of flow barriers in the CPRAS has been recognized and discussed in numerous studies (for example, Newcomb, 1959; Porcello and others, 2009). The Yakima Fold Belt includes most of the western half of the plateau and is characterized by a series of east-west trending anticlinal ridges and synclinal basins. The Palouse Slope occupies the northeast quarter of the plateau, is much less deformed, and has a gently southwestward dipping slope. The other structural regions within the CPRAS are the Blue Mountains, a composite anticlinal structure that forms the southeastern extent of the Columbia River basin, and the Clearwater Embayment, which marks the eastward extent of the CPRAS along the foothills of the Rocky Mountains and includes a series of folds extending into Idaho.

Much of the Columbia Plateau is semiarid, the mean annual precipitation for 1895–2007 (Kahle and others, 2011, p. 4) is about 17 in/yr (about 40 million acre-ft/yr) and ranges from about 7 in. in the center of the study area to more than 60 in. in the north-westernmost extent of the study area. The types and amounts of natural vegetation growing on the Columbia Plateau are largely dependent on precipitation and land-surface elevation. The vegetation ranges from sagebrush and grasslands at lower elevations to grasslands and forest at mid elevations to barren rock and conifer forests at the upper elevations. Dry land agriculture mainly includes winter and spring wheat and lentils. Irrigated agriculture includes apples, hops, and other crops.

Overviews of the geology and hydrology of the CPRAS presented summarize detailed descriptions in reports by (1) Kahle and others (2009), who discuss the geologic framework used in this report; (2) Burns and others (2011), who describe the three-dimensional characteristics of the geology of the CPRAS; and (3) Kahle and others (2011), who discuss the hydrogeologic framework and the hydrologic budget components of the CPRAS.

Hydrogeologic Setting

The Columbia Plateau is an intermontane basin between the Rocky Mountains and the Cascade Range that is filled with mostly Cenozoic basalt and sediment. Most rocks exposed in the region are the CRBG, intercalated sedimentary rocks, and overlying younger sedimentary rocks and deposits that include Pleistocene cataclysmic flood deposits, eolian deposits, and terrace gravels of modern rivers. The CRBG consists of a series of more than 300 flows that erupted in various stages during the Miocene, 17 million to 6 million years ago. Individual flows range in thickness from 10 to more than 300 ft (Tolan and others, 1989; Drost and others, 1990). Soil and sediments that were formed or deposited on top of older lava flows and then covered and preserved by a subsequent lava flow are called sedimentary interbeds.

Generalized geologic stratigraphy discussed in this investigation is broadly based on recognized formations within the Columbia River Basalt Group. The primary geologic formations of interest, listed in order of increasing age, include the Saddle Mountains Basalt, the Wanapum Basalt, and the Grande Ronde Basalt (fig. 2; Swanson and others, 1979, p. G4–G8; Whiteman and others, 1994, p. B32–B33). Younger sedimentary deposits cover parts of the CRBG across the study area and are referred to informally as the Overburden. The Overburden consists of undivided, unconsolidated to semi-consolidated sedimentary deposits ranging from Miocene to Holocene in age (Drost and others, 1990). These include many types of deposits of local and (or) regional extent including flood gravels and slack water sediments, terrace gravels of modern rivers, and eolian deposits that can range in thickness from 0 to 1,300 ft. The Saddle Mountains Basalt formation consists mostly of basalts and associated sedimentary interbeds and is the least extensive and youngest formation of the CRBG. Most of the formation is in the west-central part of the study area, with less continuous occurrences in the Blue Mountains and eastward into Idaho. Thickness of the Saddle Mountains Basalt ranges from 0 to about 1,000 ft. The Wanapum Basalt formation, composed mostly of basalt and sedimentary interbeds, is in the central part of the study area. Much of the formation lies beneath the Overburden and Saddle Mountains Basalt. Thickness of the Wanapum Basalt ranges from 0 to about 1,200 ft. The Grande Ronde Basalt formation is the oldest and most extensive of the basalt formations discussed and comprises the vast majority of the CRBG. This formation underlies most of the study area, except for an area along the southern boundary of the CPRAS in Oregon and along the eastern edge of the aquifer system in Idaho. The Grande Ronde Basalt formation contains basalt and sedimentary interbeds. Thickness of the formation is largely unknown, but may be greater than 15,000 ft near the central part of the basin (Burns and others, 2011, p. 30, fig. 10*D*, and digital data).

Folding and faulting of the basalts occurred during the period of deposition and more recently. Younger basalt flows commonly were less-voluminous intra-canyon flows, so the distribution and thickness of these lavas are controlled by the shape of the valleys through which the lava flowed. Pleistocene outburst floods shaped the area by causing incision in the basalt, and erosion and deposition of the overlying sediment.

These geologic formations correspond to the hydrogeologic units defined for use in the USGS Regional Aquifer-System Analysis (RASA) Program and Groundwater Availability studies of the CPRAS (Whiteman and others, 1994, p. B32–B33; Kahle and others, 2009), and consist of the Overburden unit, the Saddle Mountains unit, the Wanapum unit, and the Grande Ronde unit. The informal term “unit” is used to differentiate from the formal geologic formations simplified for hydrologic discussions. For example, the geologic formations were simplified by grouping the Mabton and Vantage Interbeds into the Saddle Mountains and Wanapum units, respectively. The older rocks bordering and underling the CPRAS form the basement confining unit, referred to as the Older Bedrock hydrogeologic unit, and is composed of various rock types older than the CRBG, generally with much lower permeabilities than the basalts and considered the base of the regional flow system.

Hydrogeologic Characteristics

The hydraulic characteristics of the geologic materials determine how a groundwater-flow system functions and how it will respond to stresses such as pumpage. These characteristics include horizontal and vertical hydraulic conductivity and the storage coefficient. Because of the heterogeneity of the geologic materials that comprise the CPRAS, the hydraulic characteristics can vary considerably. The Overburden deposits are diverse in lithology and the large variation in grain size, depositional regimes, and age of the deposits account for the large range of their hydraulic characteristics (Kahle and others, 2011, p. 20). Each of the CRBG geologic units consist of tens to hundreds of individual layered basalt flows. The layers are highly variable in thickness and extent, but over much of the Columbia Plateau, the lava flows are comprised of flood basalts that form laterally extensive deposits. Hydraulic characteristics vary greatly within and between the individual basalt flows. Horizontal hydraulic conductivities generally are greatest in the interflow zones formed from the combination of basalt flow tops with the base of an overlying basalt flow, and an intervening sedimentary interbed, if present. Flow tops and bases commonly are brecciated, although they can exhibit a wide range of depositional textures. Because flow tops and bottoms commonly have open and highly-connected pore structures, the basalt interflow zones frequently exhibit high horizontal hydraulic conductivity (Lindolm and Vaccaro, 1988). The interflow zones are separated by the low hydraulic conductivity flow interior in which most fractures are cooling joints that often are vertically oriented (columnar jointing). Despite the fact that joints exist, flow interiors commonly are effective confining units. Porosity and permeability generally are lower in the older bedrock than in the Overburden and CRBG units.

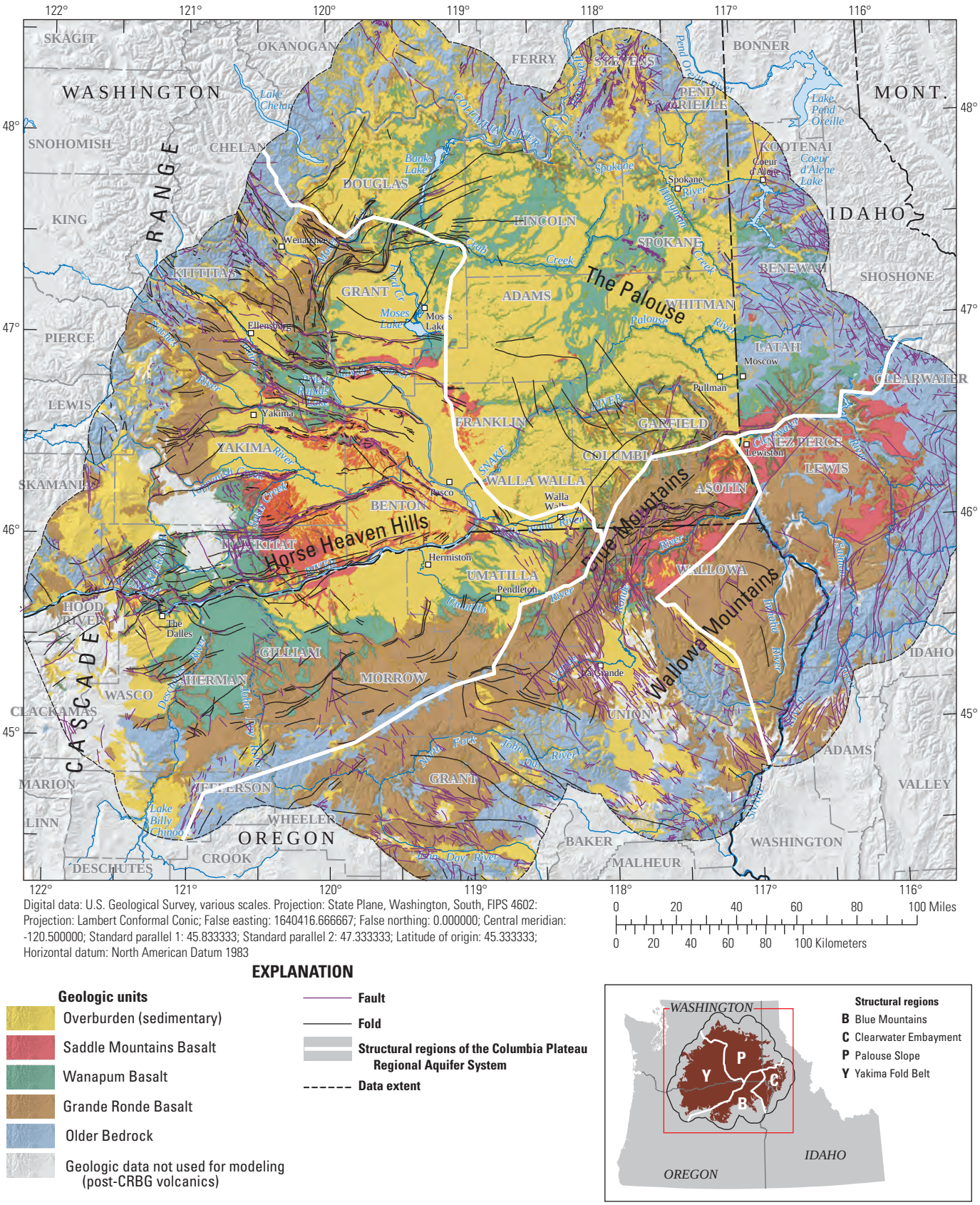

Figure 2. Surficial geology and structures of the Columbia Plateau Regional Aquifer System, Washington, Oregon, and Idaho.

Kahle and others (2011, p. 21) estimated the median horizontal hydraulic conductivity values for the Overburden, basalt units, and older bedrock as 161, 70, and 6 ft/d, respectively, based on specific capacity data reported in previous studies. Vertical hydraulic conductivity of the geologic units in the CPRAS generally is known to be low but is poorly quantified. Estimates of vertical hydraulic conductivity range from about 0.009 to 2 ft/d for the Overburden unit, although values for some parts of this unit may be as low as 10^{-10} to 10^{-7} ft/d; values for the CRBG units range from 4×10^{-7} to 4 ft/d (Kahle and others, 2011, p. 57).

The storage characteristics of an aquifer are described by the storage coefficient, a dimensionless property defined as the volume of water that an aquifer takes into or releases from storage per unit of surface area per unit change in head. Previous estimates of the storage coefficient in the CPRAS typically range from about 0.1 to 0.2 for the unconfined parts of the Overburden unit and from about 0.01 to 10^{-6} for the CRBG basalt units (Kahle and others, 2011, p. 26–27).

Hydrologic Budget Components

The following discussion and estimates of the regional-scale hydrologic budget components for the CPRAS is from the recent work by Kahle and others (2011). Mean annual recharge from infiltration of precipitation was estimated based on annual precipitation data and previous model simulation results of recharge. The estimates of the other budget components were developed using a monthly SOil WATer (SOWAT) balance model to determine irrigation water demand, groundwater flux to the underlying modeled soil zone (recharge or discharge), direct runoff, and soil moisture in irrigated areas (Kahle and others, 2011, p. 36). The SOWAT model was developed to make use of estimates of actual evapotranspiration available from a new Simplified Surface Energy Balance method that uses remotely sensed land-surface temperature data (Senay and others, 2007).

Mean annual recharge from the infiltration of precipitation of 4.6 in/yr (10.8 million acre-ft/yr) for 1985–2007 was estimated for the CPRAS. The spatial distribution in recharge mirrors that of annual precipitation, with the highest recharge (more than 20 in/yr) occurring along the Cascade Range and the Blue Mountains. Mean annual recharge from infiltration of precipitation is less than 1 in/yr for a large part of the study area adjacent to the Columbia and Yakima Rivers where precipitation is limited.

Mean monthly irrigation throughout the study area peaks in July at 1.6 million acre-ft (MAF) (1985–2007 average), of which 0.45 and 1.15 MAF are from groundwater and surface-water sources, respectively. Annual use of irrigation water in the study area averaged 5.3 MAF during 1985–2007, with 1.4 MAF (or 26 percent) supplied from groundwater and 3.9 MAF supplied from surface water. Mean annual groundwater recharge from deep percolation of applied irrigation water in the study area was 4.2 MAF (1985–2007); 2.1 MAF (50 percent) occurred within the predominately surface-water irrigated regions of the Yakima Basin, Umatilla Basin, and Columbia Basin Project. The Columbia Basin Project, located in east central Washington, consists of more than 1,000 mi^2 of land irrigated with Columbia River water through a series of dams, pumping plants, and canals. Annual recharge rates range from less than 5 in/yr in predominately sprinkler-irrigated areas where groundwater is the source to more than 20 in/yr in surface-water supplied areas where conveyance losses and less-efficient application methods are more common.

Annual groundwater use (1984–2009) for purposes other than irrigation was estimated for the study area using information from several agencies. Public-supply groundwater use increased from about 201,000 acre-ft/yr in 1984 to about 269,000 acre-ft/yr in 2009. Domestic self-supplied groundwater use increased from about 54,600 acre-ft/yr in 1984 to about 71,200 acre-ft/yr in 2009. Industrial groundwater use decreased from about 53,400 acre-ft/yr in 1984 to about 43,900 acre-ft/yr in 2009. Other groundwater use, including for mining, thermoelectric needs, livestock, and aquaculture combined, increased from 16,900 acre-ft/yr in 1984 to about 43,600 acre-ft/yr in 2009.

Groundwater Occurrence and Movement

Groundwater moves through the regional aquifer system from the uplands to surface drainage features in the lowlands, mainly to the Columbia River and its major tributaries. Groundwater movement is affected by the geometry of the land surface and stream system, the extent, thickness, and hydraulic properties of the aquifers, the presence and nature of geologic structures, and the rate and location of groundwater recharge and discharge. Groundwater flow within the basalt units moves horizontally and vertically in the basalt interflow zones, flow centers, and sedimentary interbeds (Kahle and others, 2011, p. 27). Horizontal hydraulic conductivities generally are greatest in the interflow zones and consequently the interflow zones support most of the horizontal groundwater movement, whereas movement in the typically thick and lower horizontal hydraulic conductivity flow centers mainly is vertical. Therefore, the interflow zones in the basalt sequence form numerous, thin, semiconfined aquifers whose physical and hydraulic characteristics vary horizontally and vertically. Geologic complexity consisting of changes in lithology and folds and faults affect the geometry of flow paths by forming flow barriers or preferential pathways for groundwater flow (Snyder and Haynes, 2010, p. 7; Kahle and others, 2011, p. 27).

Study Methods

Recent and historical water-level data were compiled from a large number of wells located throughout the CPRAS. These data were used to identify "well groups" each consisting of individual wells with similar hydraulic heads (groundwater levels) and temporal trends. Comparisons were made between adjacent well groups to delineate sets of well groups, which define areas of overall similar groundwater-flow conditions with regard to groundwater-flow directions and horizontal and vertical hydraulic gradients (the change in hydraulic head per unit of distance in a given direction). Discontinuities in groundwater-flow conditions between the sets of well groups were used to help infer the presence of features that contribute to control the regional flow of groundwater. These discontinuities can result from: (1) geologic features that influence the hydraulic properties of the aquifer such as changes in lithology or the occurrence of structural folds and faults, or (2) the presence of hydrologic features such as groundwater mounds or troughs caused by stresses such as recharge from irrigation or discharge to pumping.

Sources of Data

The evaluation of groundwater status and trends for the CPRAS relied on information that was routinely collected by many agencies or that was developed in the current or previous studies of groundwater availability in the CPRAS. In particular, this report relies heavily on the development of the geologic framework and three-dimensional geologic model by Kahle and others (2009) and Burns and others (2011), respectively, and the hydrologic budget components developed by Kahle and others (2011).

Groundwater-Level Information

The primary source of well information, including location, construction, and water-level measurements, was the USGS National Water Information System (NWIS). Additional well and water-level data were provided by the U.S. Department of Energy, Washington State Department of Ecology, Oregon Water Resources Department, Columbia Basin Ground Water Management Area, GSI Water Solutions, Inc., Confederated Tribes of the Umatilla Indian Reservation, and Walla Walla Basin Watershed Council. Due to constraints on project resources, not all wells or water-level measurements from the CPRAS were included in this study. Emphasis was placed on incorporating datasets with the greatest number of wells, which included information on well construction and many water-level measurements made over relatively long periods. Wells are primarily within the extent of the CPRAS, although some wells as much as 20 mi outside of the CPRAS boundary also were included to help identify groundwater-level conditions across the boundary of the CPRAS (fig. 3). Information was acquired for 60,115 wells, although usable water-level data were available for only 39,610 wells. A total of 447,992 water-level measurements were collected from the 39,610 wells. The period of record for the water-level data extended from 1891 to 2010. The longest period of record for water-level measurements at an individual well is 96 years. Measurements at the longest annually monitored well began in 1940 and continue to the present (2011). From these data a subset of 7,772 wells and 147,563 water levels were used for the analyses presented in this report and are on file at the USGS office in Tacoma, Washington (http://wa.water.usgs.gov/projects/cpgw), and available upon request. Much of the data processing for analyzing groundwater levels was accomplished using Excel® spreadsheet tools developed by Tillman (2009).

Information on land-surface elevation was needed to calculate groundwater elevation from depth-to-water measurements. Land-surface elevations for many wells were reported by the agencies that provided the well information. Land-surface elevations were independently determined using a 10-m lateral resolution Digital Elevation Model (DEM; U.S. Geological Survey, 1999) as verification for these wells and to obtain land-surface elevations for the remaining wells with no reported values. Values of the DEM derived land-surface elevations were used if the difference between the reported and DEM derived elevations differed by greater than 100 ft.

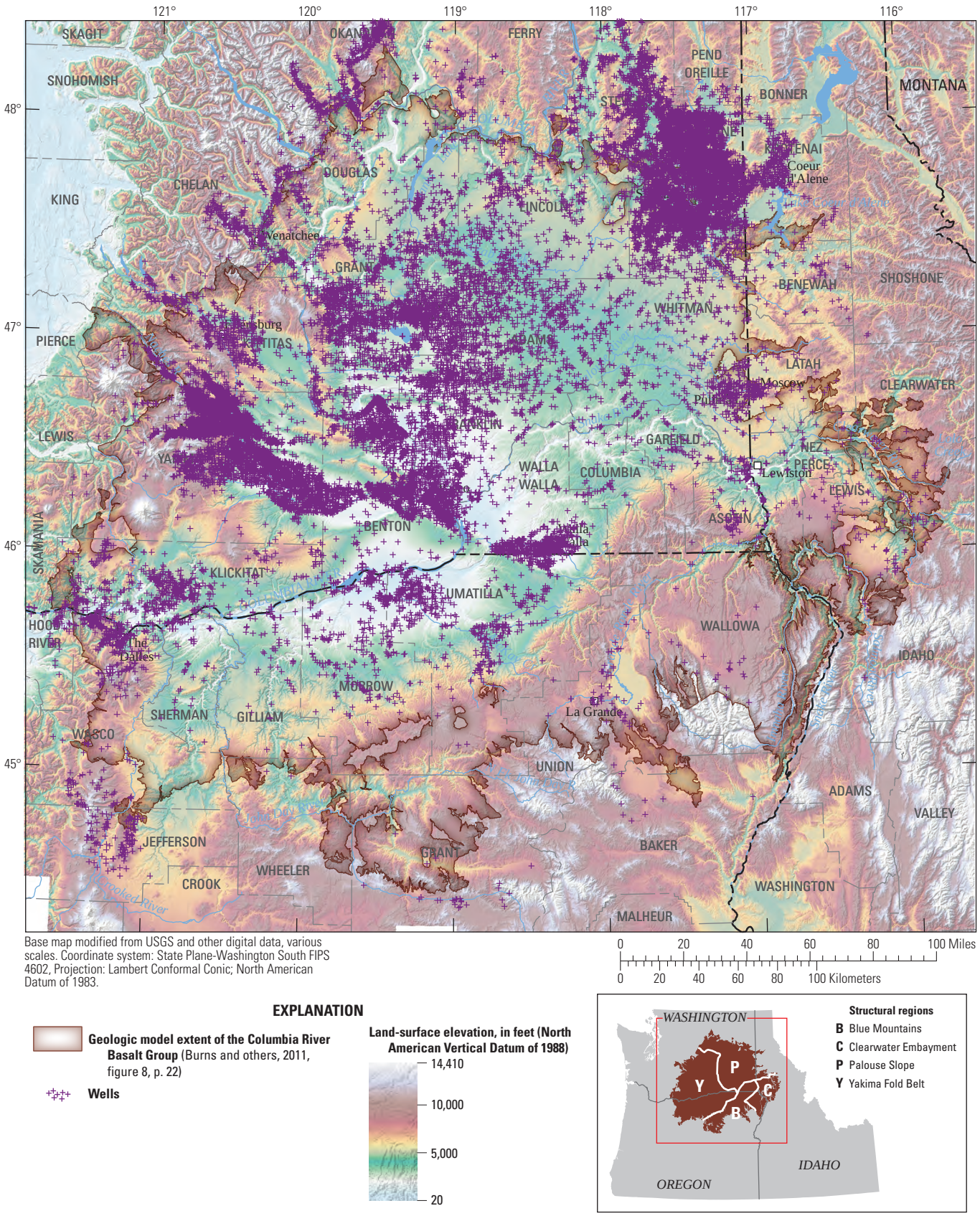

Figure 3. Locations of wells with usable water-level data within or immediately adjacent to the Columbia Plateau Regional Aquifer System, Washington, Oregon, and Idaho, subsets of which were used for analysis in this study.

Geologic Model

A geologic model (Burns and others, 2011) provided improved estimates of CRBG and Overburden unit volumes and refined location of large structural features. This model was used to interpret the presence and significance of hydrogeologic controls on the groundwater system presented in this report. An on-line interactive tool was developed to serve point information and cross sections developed from the geologic model to the public (U.S. Geological Survey, 2012).

Data Limitations

The accuracy and representativeness of the groundwater-level measurements are dependent on various factors pertaining to measurement accuracy, quality assurance procedures, local conditions in the aquifer at the time of measurement, and well construction.

Measurement Accuracy and Data Compilation

Typical methods used to measure the depth to water in a well have precisions ranging from 0.01 ft to several feet. The precision of most measurements is expected to be in the range of about 0.1 ft. However, the accuracy of the determination of the groundwater elevation (how it compares to the actual value) depends on how the depth to water measurement is transformed to a groundwater elevation at a particular location, how it is associated with a particular aquifer, and the associated quality assurance procedures. A major factor affecting measurement accuracy is related to how the elevation for the well was determined, and the errors associated with assigning an elevation to the well. Errors also can relate to the location of the well. Errors in the latitude and longitude coordinates for the site can create errors of hundreds of feet in the assigned elevation of the water level, especially in areas with steep relief. For this report, well locations and elevations were mostly based on information reported from the respective agencies. A comparison was made between reported well elevations and those determined from a 10-m DEM on the basis of the reported latitude and longitude locations and lateral datums from the respective agencies. The median of the absolute values of the elevation differences is 4.3 ft and 90 percent of the differences are less than 44 ft.

The well and water-level data were compiled from many different agencies. Each agency has its own protocols for the description and documentation of measured wells, for the collection and recording of water-level data, and quality assurance procedures. Errors can occur when compiling large datasets due to either data entry, arithmetic errors, or treatment of exceptions when using rule-based algorithms to write all data into a common database. Common errors include incorrect well identification or location, incorrect or incomplete well construction information, errors in depth to water measurements, and incorrect determination of land-surface elevations. Additionally, some well information and water-level measurements for the same well may be reported by multiple agencies resulting in duplication of information. An effort was made to identify and correct errors in the data used in this study. However, it was not possible to ascertain the quality of the well information or water-level measurement for each well and undoubtedly, errors are present in the data. The large number of wells and measurements used in the analyses in this study should help to minimize the influence of these errors and provide a robust estimate of the groundwater elevation.

Water-level measurements in reports filed by well drillers at the time of new well installations were included in the compilation of water levels. However, measurements of water levels in newly constructed wells may not have been at equilibrium at the time of measurement and therefore may not represent static water-level conditions (Snyder, 2008, p. 11–14). Water-levels where the status indicated the well was dry, obstructed, or influenced by pumping, were excluded from the analyses as these water levels may not represent static conditions.

Representative Sampling

The groundwater-level measurements used in this study are assumed to be representative of the groundwater positions within the aquifers of the CPRAS. However, some of the data may suffer from a number of possible biases. These biases may arise from a variety of sources such as influences due to localized conditions and stresses, well construction, and commingling of groundwater. In addition, the spatial distribution and selection of wells used for the collection of water-level measurements may be biased as a result of increased scrutiny and monitoring in areas with groundwater declines. This can result in the clustering of wells and an over-representation of wells showing water-level declines.

Localized Conditions and Stresses

Pumping and recharge stresses can cause geographically localized or transient perturbations of water levels. Water-level measurements affected by such localized perturbations may not be representative of true conditions in the aquifer over a broader area.

Recharge in the CPRAS is dominated by precipitation (Kahle and others, 2011), which generally has gradual geographic variation. However, other recharge sources such as irrigation water, artificial recharge, or leakage from streams, canals, or lakes can influence groundwater levels over short distances. Stresses due to discharge by pumping, or to gaining streams, springs, seepage faces, wetlands, or evapotranspiration similarly can have large variations over short distances and influence groundwater levels.

The aquifer properties that influence the movement and storage of water in the aquifer and, therefore the groundwater level in the aquifer, include the extent, thickness, shape, hydraulic conductivity, storage coefficient, and degree of confinement. These properties can be highly heterogeneous over short distances due to variations in the original lithology or process of emplacement, subsequent modification by physical process such as erosion or fracturing due to structural deformation, or chemical changes such as dissolution, alteration, or mineralization. Variations in these properties over short distances may affect the groundwater levels and (or) the timing and magnitude of groundwater changes in response to changes in stresses relative to groundwater levels elsewhere in the aquifer.

Influence of Well Construction

Well construction may substantially influence the water levels in wells. Ideally, a well used for groundwater-level monitoring should be constructed to ensure good hydraulic connection between the well and the intended aquifer and that the water level and water-level fluctuations in the well broadly represent conditions in the aquifer. The well design must take into consideration the placement of open intervals and include appropriately-sized well screens to permit a good hydraulic connection between water in the aquifer and in the well. The use of sanitary and flow seals and well casings, where needed, help to isolate the well and the contributing aquifer from other units to prevent commingling, the collapse of rock into the well, and movement of water between the rock and the outside of the well casing. Incorrect well design, construction defects at the time of installation, insufficient well development (repeated purging and filling of a well to remove fine materials that may clog the well screen), or degradation due to age including silting, corrosion, or bacterial growth may affect how a well responds to changes in the aquifer (Taylor and Alley, 2002, p. 9).

Complete and accurate documentation of the well construction is important to ensure that the water levels measured in the well are properly interpreted. Documentation of well construction for some wells often is incomplete and does not include sufficient information, such as lithology or position of open intervals, to identify the contributing aquifer(s). This creates uncertainty on how to associate a water-level measurement from a well with the appropriate aquifer. Uncertainty with regard to the aquifer represented in a water-level measurement can contribute to misleading interpretations.

Over time, water-level declines in the CPRAS have resulted in dry wells, some of which have been deepened and reconstructed. Because water-levels from a deepened or reconstructed well represent conditions at a different location in the aquifer system, measurements always should be associated with well depth and construction at the time of measurement. However, in most instances the information on the deepening of wells was not associated with the original well for the data compilation sources used for analysis in this study. As a result, water-level measurements made subsequent to the deepening of some wells may remain associated with the depth of the original well. Hydrographs for these wells may show an initial step change in the water-levels measured in the well following deepening that could be mistakenly attributed to other causes. The water-level response of the well subsequent to deepening also may reflect the conditions in the aquifer at the new well depth. To address these limitations, robust methods of analysis were used to ensure that errors at individual wells did not strongly affect overall study conclusions.

Commingling

Commingling is the term used to describe the condition that occurs when a well is constructed so water can move from one aquifer to another through the well bore. This can occur in wells that are open to multiple aquifers through screens or uncased intervals. If the aquifers have different heads, then water will move through the well bore from the aquifer(s) with higher head to the aquifer(s) with lower head. When such commingling occurs, the static water level in the well is a composite water level, averaging conditions between all the aquifers open to the well.

In figure 4, well 3 is a hypothetical multiple completion well with open intervals in aquifers 1 and 2, which results in commingling of waters between aquifers. Because the hydraulic head in aquifer 1 (as represented by the potentiometric surface of the aquifer at the well) is greater than the hydraulic head in aquifer 2 a downward hydraulic gradient enables flow to enter the well 3 bore from aquifer 1, traversing down the well 3 bore and exiting the well 3 bore into aquifer 2. For this example, the transmissivities of aquifer 1 and 2 are equal; therefore, the resulting hydraulic head in well 3, from a transmissivity-weighted average of the heads

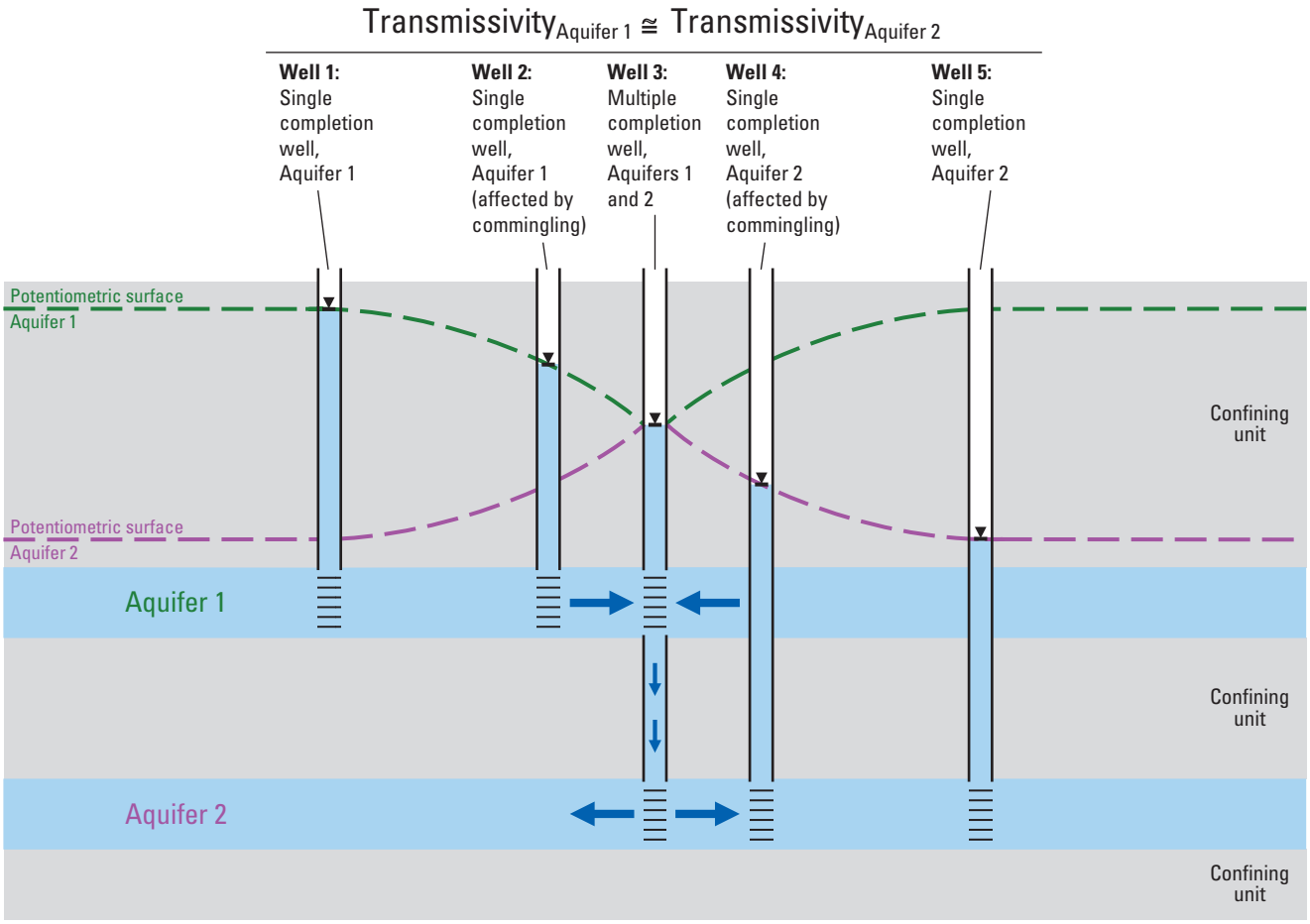

Figure 4. Effect of commingling on water levels in hypothetical wells for aquifers of equal transmissivity. Near the commingled well (well 3), the potentiometric surface is strongly affected by aquifer cross-connection. Far from the commingled well, the potentiometric surface reflects regional conditions.

in aquifers 1 and 2, is exactly one-half the vertical distance between the head in the two aquifers. Well 2 and well 4 are single completion wells with open intervals within aquifer 1 and aquifer 2, respectively, that are in close proximity to commingling well 3. These wells are within the cone of depression and cone of impression (the inverse of a cone of depression) resulting from the commingling in well 3. The hydraulic head in these wells is intermediate to the head at well 3 and the initial unaffected heads in aquifers 1 and 2 as represented by the heads in wells 1 and 5, respectively.

In figure 5, the transmissivity of aquifer 1 is much greater than the transmissivity of aquifer 2; therefore, the head in well 3 is dominated by the hydraulic head of aquifer 1. Because the cone of depression for aquifer 1 is greatly subdued, water levels in proximal wells open to aquifer 1, such as well 2, are minimally affected. However, water levels in proximal wells open to aquifer 2, such as well 4, are strongly affected due to the exaggerated cone of impression for aquifer 2.

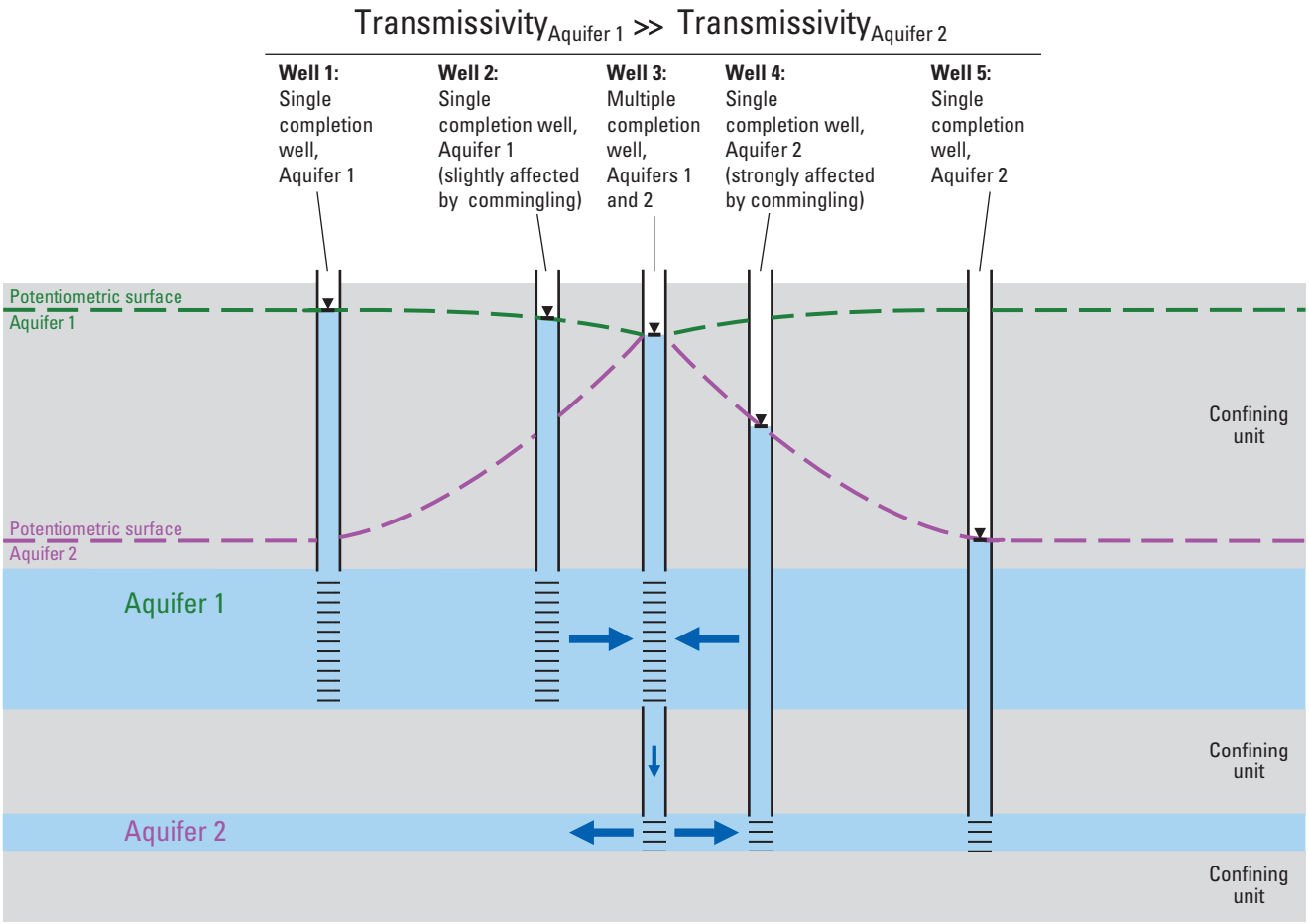

Figure 5. Effect of commingling on water levels in hypothetical wells for aquifers of unequal transmissivity. Water level in a well most closely resembles the aquifer with the higher transmissivity because the well has better hydraulic connection to this aquifer. Near the commingled well (well 3), the potentiometric surface is strongly affected by aquifer cross-connection. Far from the commingled well, the potentiometric surface reflects regional conditions.

The basalt aquifers of the CPRAS consist of a series of permeable interflow zones separated by less permeable flow interiors (Kahle and others, 2011, p. 20). The transmissivities of the aquifers can vary over several orders of magnitude (Kahle and others, 2011). The resulting water levels in commingled wells open to multiple aquifers depend on the relative transmissivity of the aquifers, which is a function of the thickness and the permeability of the aquifers. Figure 6 illustrates some possible examples for aquifers of varying transmissivity (thickness and (or) permeability).

The ratio of water-level fluctuations in a well to the groundwater-level fluctuations in an aquifer penetrated by that well is equal to the ratio of transmissivity of the aquifer in which the fluctuation occurs to the total transmissivities of all aquifers perforated by the well. As a result, the effect of the change in groundwater level of any aquifer where the well is open imposes a smaller change on the water level in the well (Sokol, 1963, p. 1,080).

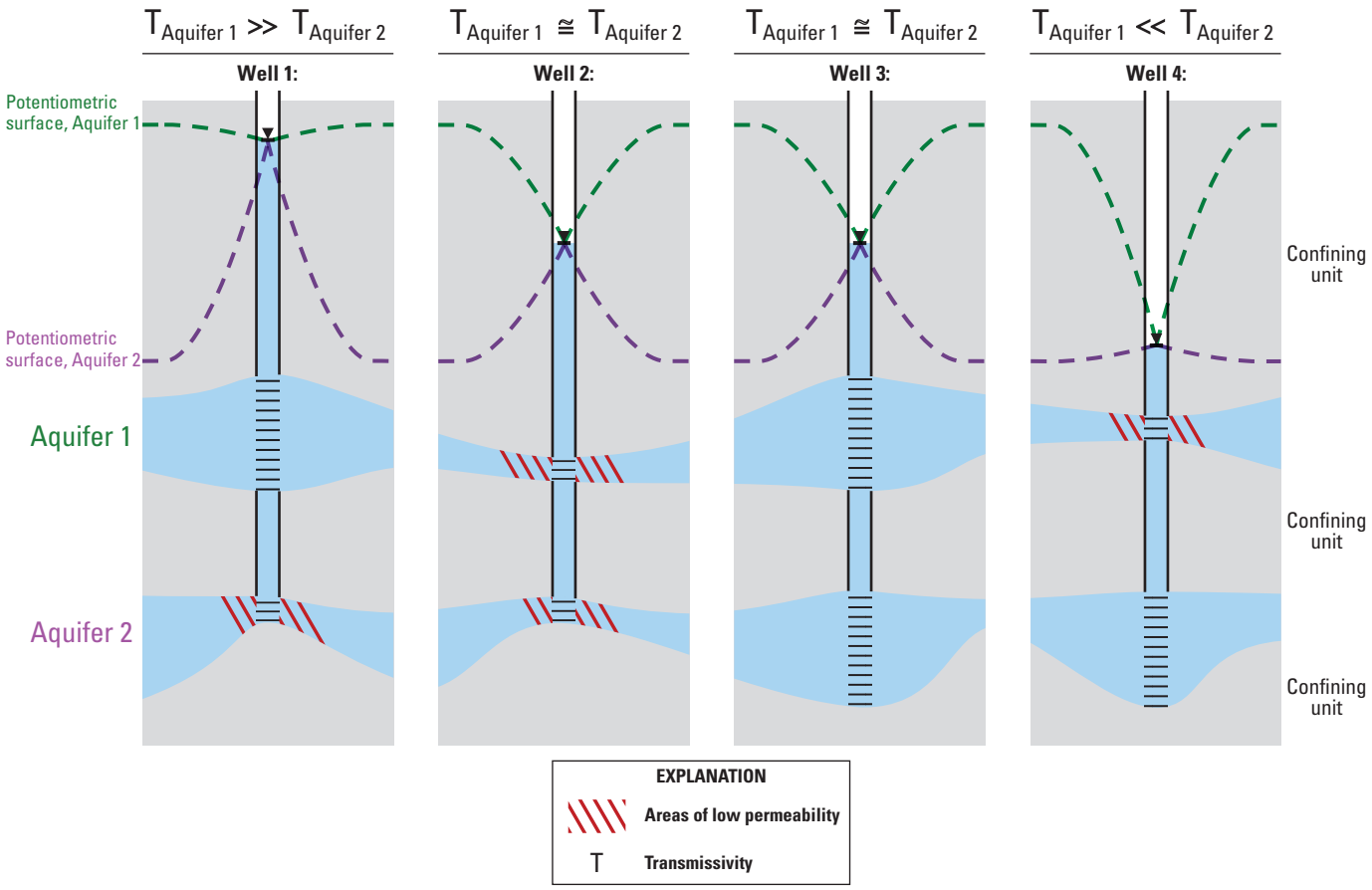

Figure 6. Effect of commingling on water levels in hypothetical wells for aquifers with local variability. Water level in a well most closely resembles the aquifer with which it is in best connection. The flow of water can be restricted by changes in aquifer thickness, aquifer lithology, or well construction, resulting in reduced hydraulic connection. Near a commingled well, the potentiometric surface is strongly affected by aquifer cross-connection. Far from the commingled well, the potentiometric surface reflects regional conditions.

Groundwater Status and Trends

Trend analyses were done on the compiled groundwater-level data for the CRBG aquifers to characterize and document changes in the hydrologic status of the system. Water levels in individual wells vary in response to natural and anthropogenic stresses on daily, seasonal, decadal, and longer time scales. Because the purpose of the USGS Groundwater Resources Program study is to evaluate the long-term availability and sustainability of groundwater resources within the CPRAS, the focus of the data analysis is to examine persistent decadal or longer trends that have occurred in many wells since the onset of widespread irrigation and groundwater pumping.

For the trend analysis, groundwater measurements representing conditions within the CRBG aquifers were used. The geologic model of Burns and others (2011) was used to identify wells with bottom elevations between the simulated top of the CRBG geologic units and the older pre-Miocene basement rocks. Water-level measurements from these identified wells then were used in the analyses. To remove daily and seasonal variation in groundwater levels induced by irrigation pumping, the median groundwater level measured in winter between January and March of each year was used in the analysis. The resulting data reflect the influence of multi-year precipitation patterns and the cumulative effects of pumping and irrigation recharge.

Water-level measurements made prior to 1951 are assumed to represent pre-development conditions because large scale irrigation started after the beginning of 1951. Because summer water levels in wells were not yet affected by large scale groundwater pumping, annual median water levels were used when winter water-level data were not available prior to 1951.

Water-level measurements in reports filed by well drillers at the time of new well installation were included to obtain the broadest spatial and temporal distribution possible in areas or periods of sparse data. Groundwater-level measurements reported as non-static measurements were excluded from analysis. The subsampled dataset includes 7,735 CRBG wells, with data representing pre-development conditions in 1,265 wells (fig. 7).

Although pumping and irrigation effects began to have appreciable effects on groundwater levels during the 1950s in the CPRAS, most persistent regional declines from pumping started after 1970. A map of the linear trends in groundwater levels for 1968–2009 was constructed to show areas of widespread declines in CRBG aquifers (fig. 8). Groundwater-level trends were computed as the slope of the best-fit line to the winter median water-level data for each well, provided that at least four data points were available that spanned at least 50 percent of the period 1968–2009. Of the 761 wells in the CRBG aquifers with sufficient data to compute water-level trends, overall declines were measured in 72 percent of the wells. The mean of the slopes of the water-level trends for all wells was a decline of 1.9 ft/yr. Rates of declines greater than 1.0 ft/yr were measured in 50 percent of wells, declines greater than 2.0 ft/yr in 38 percent of wells, declines greater than 4.0 ft/yr in 29 percent of wells, declines greater than 6.0 ft/yr in 9 percent of wells, and rates of decline greater than 8.0 ft/yr in 4 percent of wells. These results are similar to the values obtained by Snyder and Haynes (2010, table 1, p. 8) for 273 CRBG aquifer wells in the CPRAS during 1984–2009 where water levels declined in 81 percent of wells and water levels changed at an average rate of a 1.5 ft/yr decline (calculated as a weighted-mean average for all CRBG aquifer wells). Because complex anomalous behavior can occur for any single well hydrograph (for example, step changes in water level associated with nearby well construction activities), the linear water-level trend for any single well may not represent conditions over an area of interest, but the general pattern of water-level declines in multiple wells illustrates the persistent patterns across the CPRAS.

The clusters of wells with linear declines generally correspond to areas that are the subject of previous hydrogeologic studies and to continued data collection efforts by local, State, Federal, or non-governmental agencies in Oregon in the Mosier Watershed and Umatilla Basin, and in Washington in the Yakima Basin and the Palouse Slope/eastern Yakima Fold Belt in the Columbia Basin Ground Water Management Area (GWMA). The Columbia Basin GWMA, which encompasses Adams, Franklin, Grant, and Lincoln Counties (fig. 8), was designated by the Washington State Department of Ecology (WADOE), for the protection of groundwater in the area. Detailed analyses of well hydrographs for the Mosier Watershed, Oregon, and Yakima Basin, Washington, are available in Burns and others (2012) and Keys and others (2008), respectively. Well hydrographs are examined for parts of the Umatilla Basin, Oregon, and the Palouse Slope/eastern Yakima Fold Belt (within the GWMA), Washington, in this report. Groundwater-level hydrographs for the Umatilla Basin show that barriers to groundwater flow are readily identifiable. Conversely, groundwater-level hydrographs from the Columbia Basin GWMA exhibit a significantly different behavior, with fewer well-defined barriers to flow and with groundwater-level changes being dominated by the large-scale irrigation projects in the lowland near the Columbia River. An analysis describing the relation between well hydrographs and geologic features in the GWMA is presented by Porcello and others (2009); therefore, the discussion here is restricted to a complementary discussion of regional-scale flow patterns and hydraulic changes resulting from development of water resources in the GWMA since 1950.

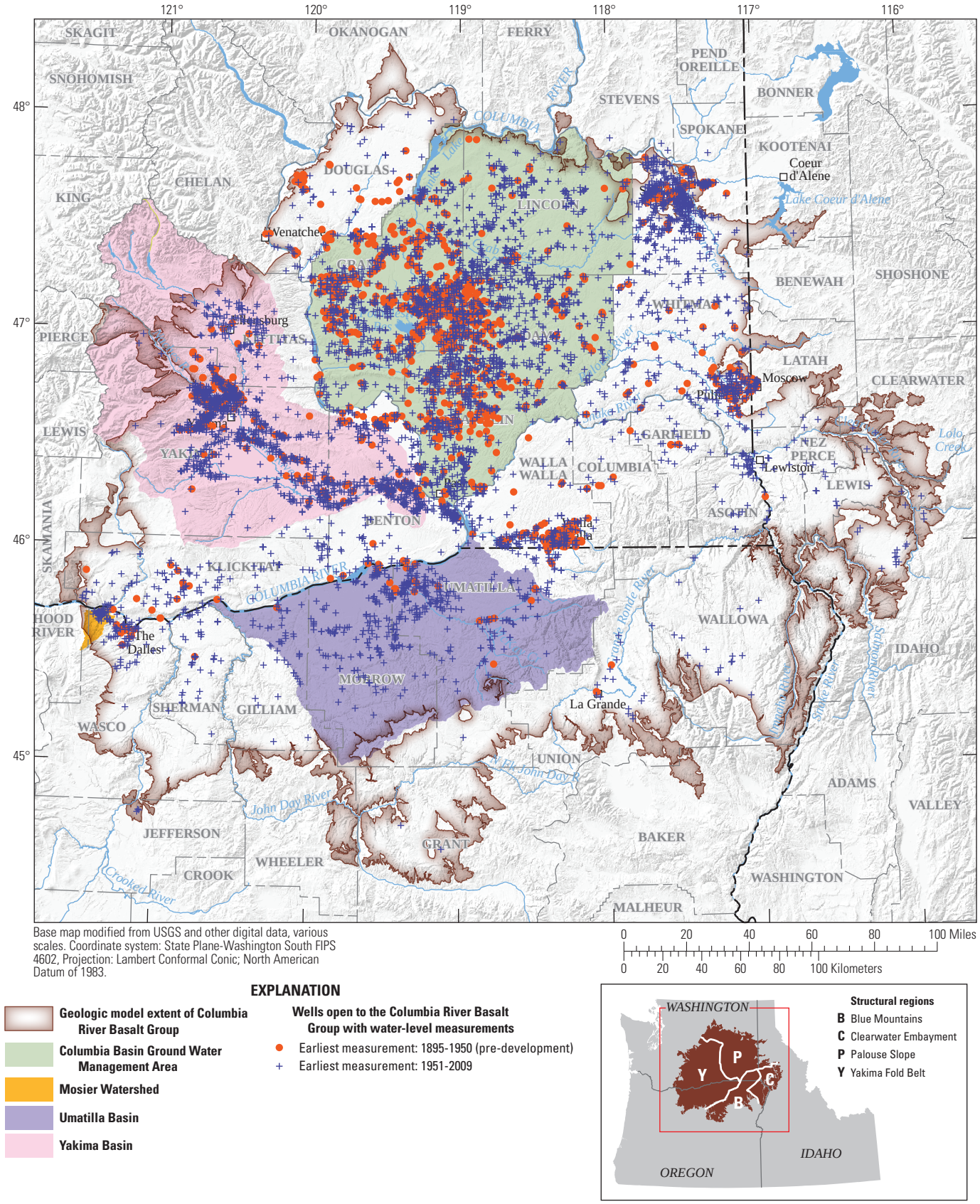

Figure 7. Distribution of wells used for status and trends analysis for the Columbia Plateau Regional Aquifer System, Washington, Oregon, and Idaho. The water levels represent the period each year when seasonal pumping effects are minimal.

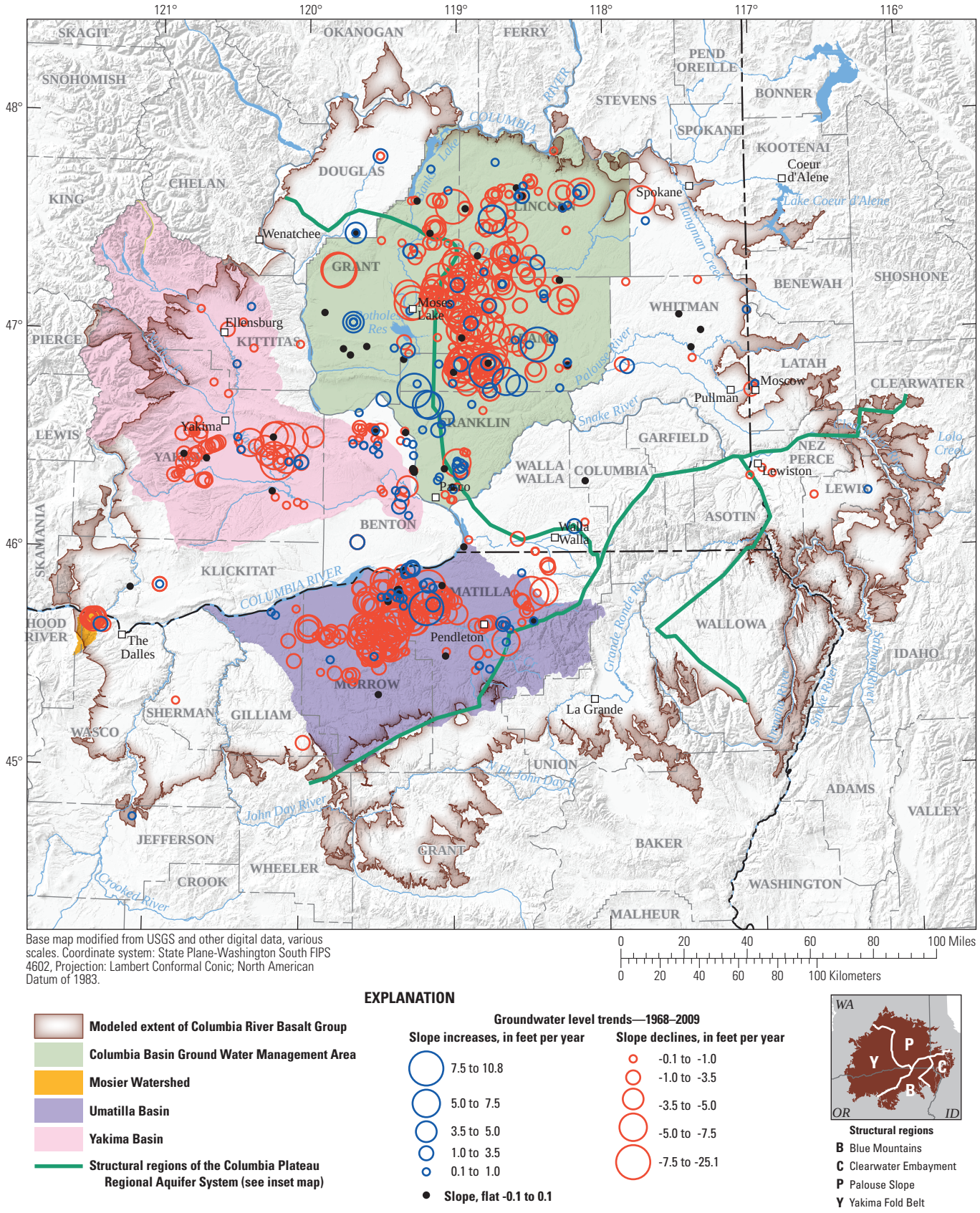

Figure 8. Distribution of groundwater-level trends in the Columbia Plateau Regional Aquifer System, Washington, Oregon, and Idaho, for 1968–2009.

Umatilla Area, Oregon

The Oregon Water Resources Department (OWRD) established several administrative areas (Critical Ground Water Areas and Ground Water Limited Areas) in the area of the Umatilla Basin that cover most locations with large long-term groundwater declines. Administrative areas include Butter Creek, Ella Butte, Ordnance Basalt, and Stage Gulch (fig. 9; Oregon Water Resources Department, 2012). A total of 286 wells within and immediately adjacent to the OWRD administrative areas in the CRBG aquifers were divided into clustered groups of wells with similar water levels and trends (fig. 10). Figure 11 presents hydrographs showing the winter median water levels for individual wells within each well group shown in figure 10 and a trend line representing the overall water-level trend of all wells in the group constructed using the LOESS algorithm in the statistical software program TIBCO Spotfire S+ (TIBCO Software, Inc., 1988–2008). Zones of low permeability may separate the groups of wells with similar groundwater levels and trends. These zones represent leaky barriers to groundwater flow and compartmentalize the CRBG aquifer system. The degree of compartmentalization is variable, but it occurs in both the vertical and horizontal directions in the Umatilla area.

Horizontal flow barriers (barriers prohibiting or reducing horizontal groundwater flow) were identified between adjacent well groups when water levels and trends were different for wells open to the same aquifer. Because aquifers have not been mapped extensively within the study area, drilling of each well was presumed stopped when the target aquifer was found. The elevation where drilling stopped was used as an estimate of the elevation of an aquifer at that location. However, the originally flat-lying CRBG lava flows have been deformed over geologic time, so the CRBG interflow zones hosting most productive aquifers in the CPRAS are not horizontal. To correct for the departure from horizontality, the geologic model of Burns and others (2011) was used to compute estimates of the stratigraphic positions for water producing zones in each well. Correction was accomplished by subtracting the estimated top elevation of the Grande Ronde Basalt geologic model unit from each well bottom elevation. Positive values indicate aquifers are in the lavas above the top of the Grande Ronde Basalt, and negative values indicate aquifers are in the Grande Ronde Basalt. Plotting the groundwater level against this stratigraphic position for each well allows a rapid assessment of whether or not hydraulic head values are representative of the same aquifers (fig. 12). However, the flow margin of several younger (post Grande Ronde Basalt) lava flows are within the area of interest with thicker deposits to the north. The resulting wedge shape of the overlying lavas complicates the interpretation of positive elevations (fig. 12) corresponding to aquifer horizons, especially for north-south transects. Additional details regarding this method are provided in appendix A.

An example of strong horizontal compartmentalization is provided by comparing groups 2 (dark blue triangles) and 12 (gray triangles) (fig. 10). Measurements for these two groups likely are from the same aquifer within the Grande Ronde Basalt although water levels differ on average by about 500 ft (figs. 11*B* and 12*D*–*F*). Within each group, water levels for nearby wells commonly are within a few tens of feet of each other. Group 2 wells have a wider range of values than group 12 wells, which corresponds to a relatively smooth hydraulic gradient from Pendleton, Oregon, to the center of the Stage Gulch administrative area.

An example of a vertical flow barrier is provided by groups 3 (dark green squares) and 14 (light blue squares) (fig. 10). In map view, these groups apparently occupy much of the same area; therefore, horizontal compartmentalization does not explain the hydraulic head contrast between the groups that began in the 1960s (fig. 11*A*). However, based on the shallow and deep well pairs shown in figure 10, group 3 well bottoms are consistently above group 14 well bottoms (fig. 13), indicating that the aquifers are separated vertically, with the shallow group 3 wells exhibiting no persistent water-level declines, and the deeper group 14 wells exhibiting substantial declines since the 1960s. Whereas small groups of wells show ideal vertical separation (fig. 13), the pattern is obscured when considering all wells in groups 3 and 14 at the same time (fig. 12*A*–*F*). Well bottoms for group 3 wells trend to lower elevations of stratigraphic position to the south (not shown), indicating that the group 3 aquifer(s) are sloping relative to the estimated top of Grande Ronde Basalt consistent with the thickening of the younger lavas to the north. If aquifers were mapped based on similarity in hydraulic head, the apparent overlap of groups 3 and 14 (fig. 12) would disappear and the ideal vertical separation (compare fig. 13 with appendix A, fig. A1*A*) would be more apparent.

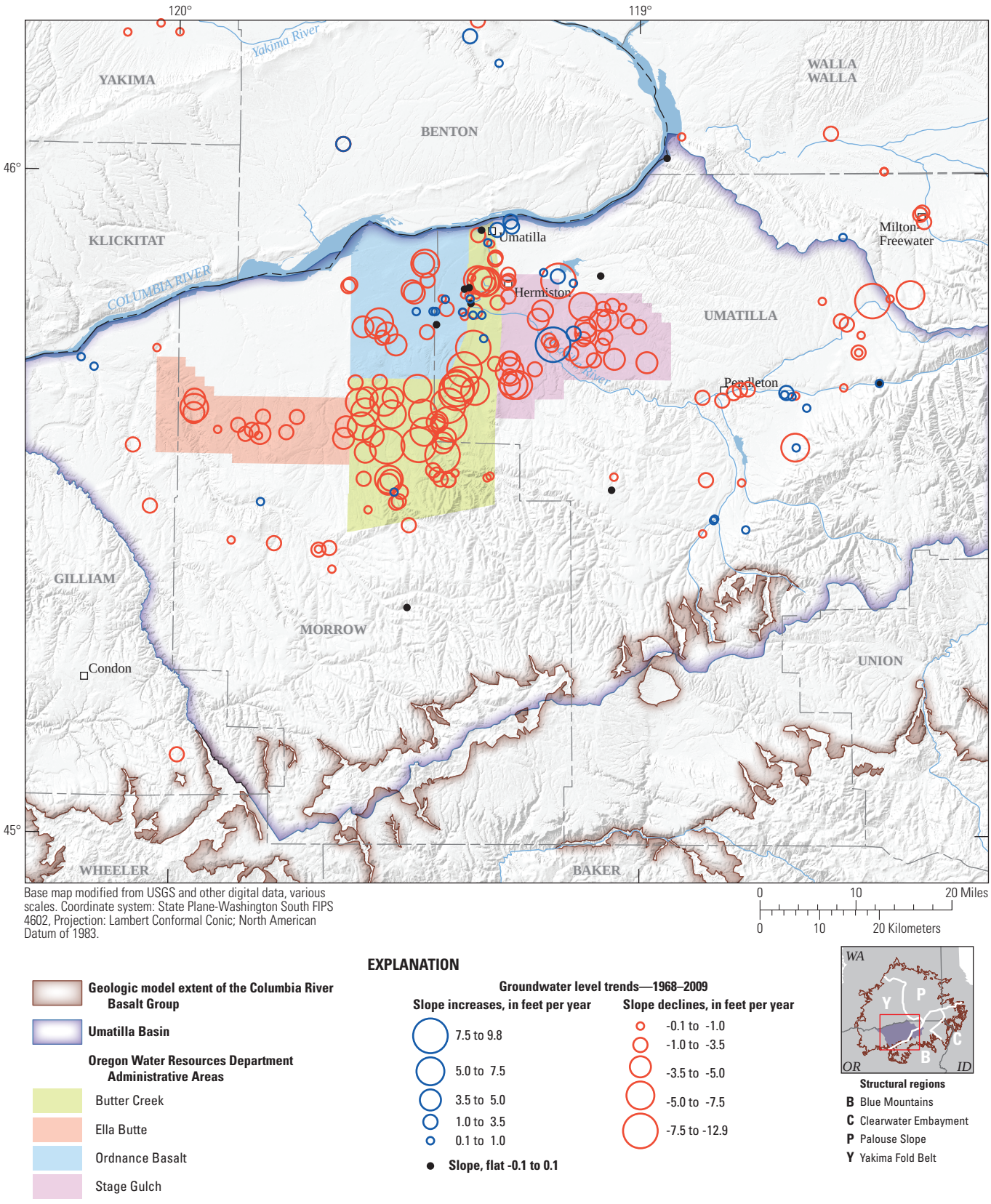

Figure 9. Distribution of groundwater-level trends for 1968–2009 in Oregon Water Resources Department administrative areas in the Umatilla Basin, Oregon.

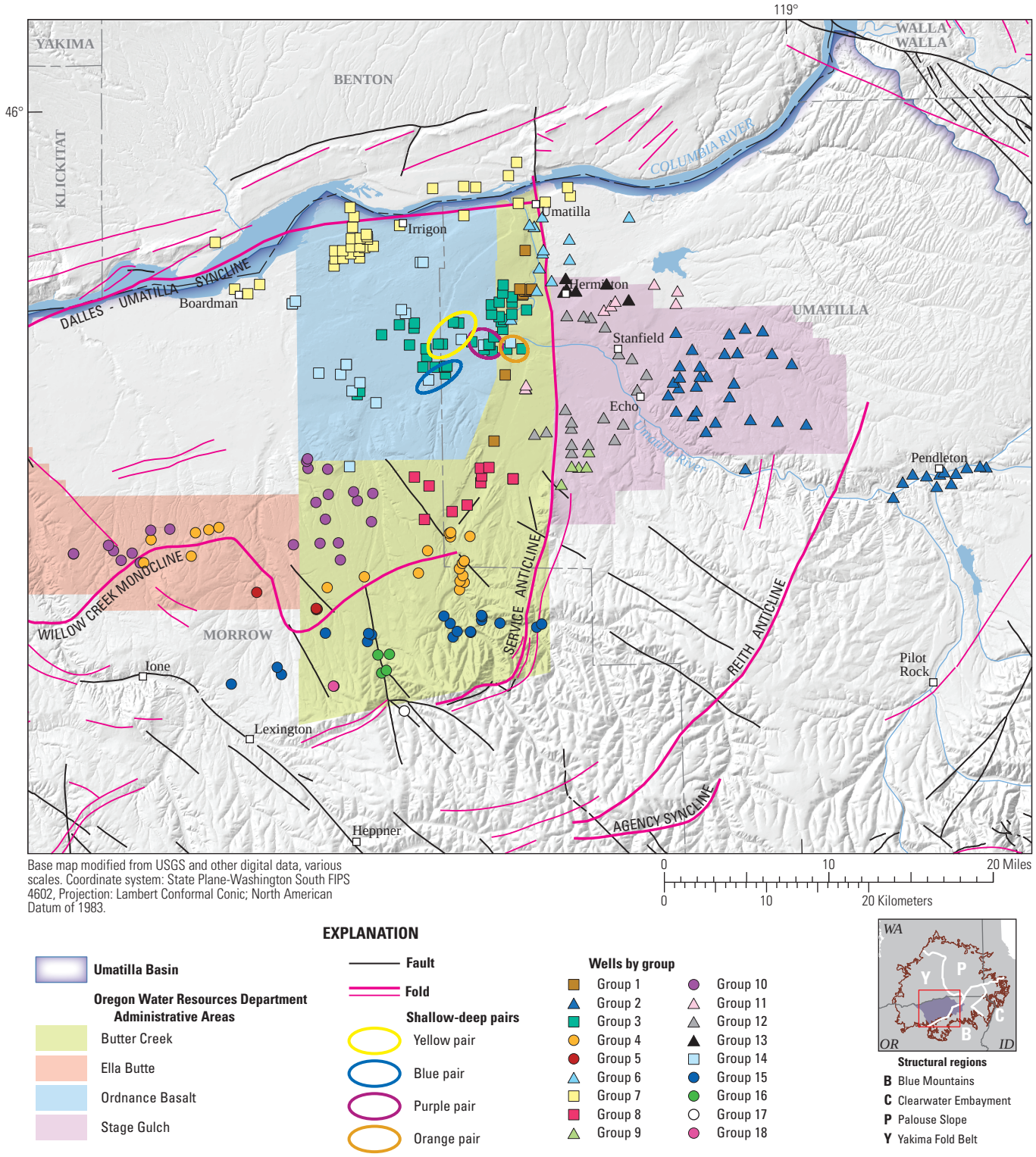

Figure 10. Groups of wells with similar hydraulic response near the Oregon Water Resources Department administrative areas in the Umatilla Basin, Oregon. Wells are grouped to show a general North-South transect (circles and squares) and a general East-West transect (triangles and squares) (fig. 11).

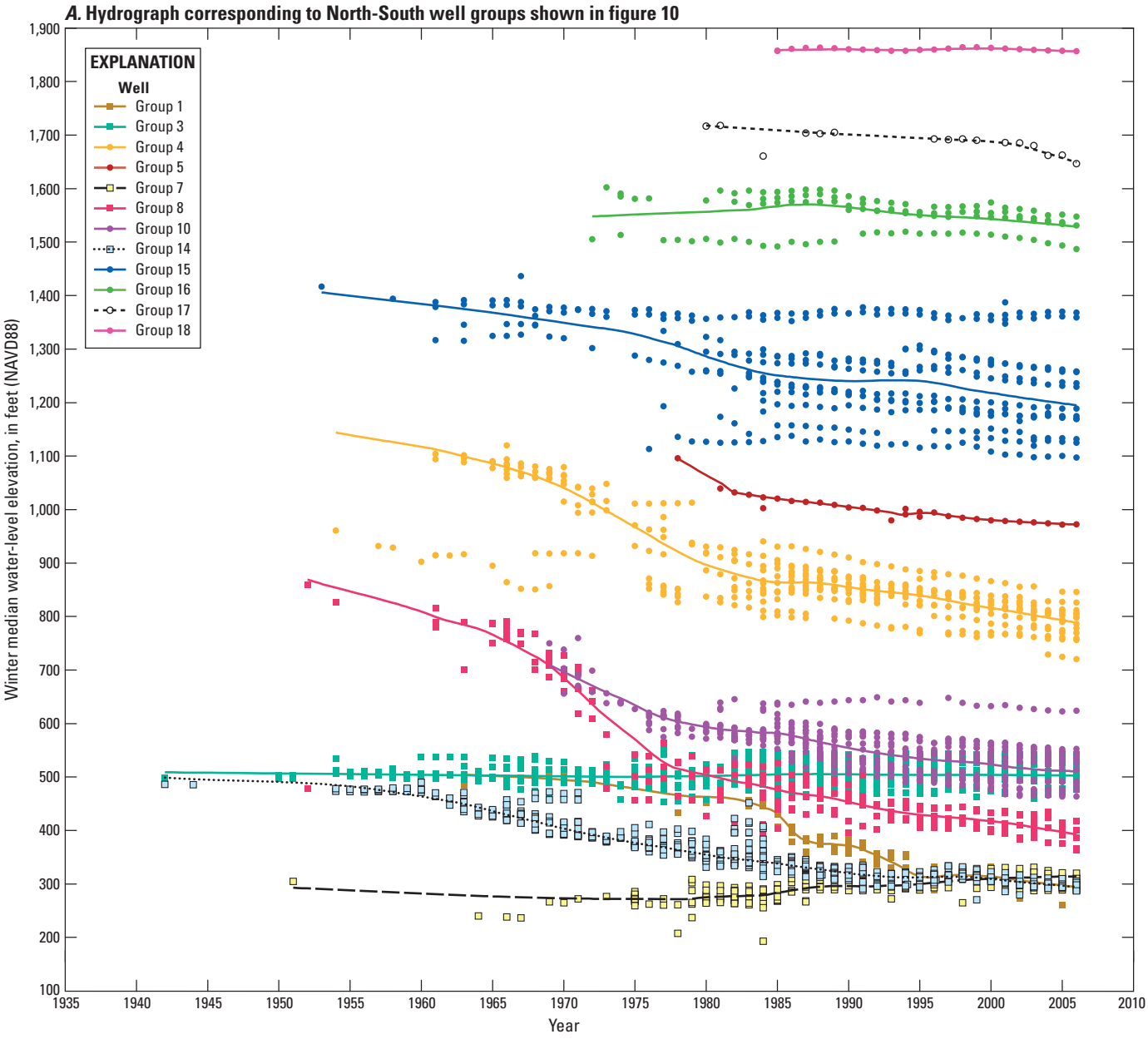

Figure 11. Groups of wells near the Oregon Water Resources Department administrative areas in the Umatilla Basin, Oregon. (*A*) North–South group (circles and squares); and (*B*) East–West group (triangles and squares). Hydrographs depict the winter median water level for individual wells within each well group and LOESS curve representing the overall water-level trend of all wells in the group. Locations of wells are shown in figure 10.

B. **Hydrograph corresponding to East-West well groups shown in figure 10**

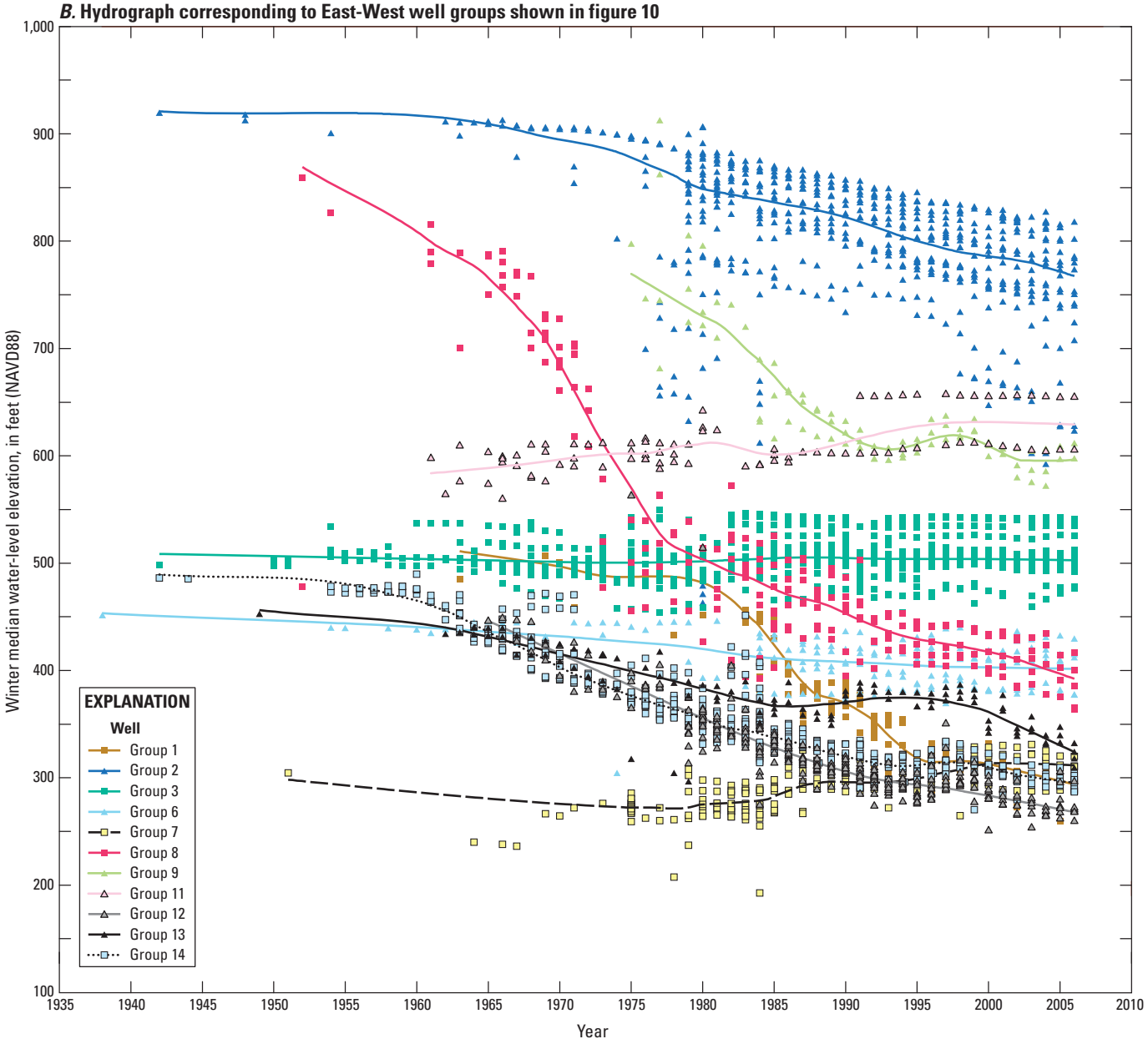

Figure 11.—Continued

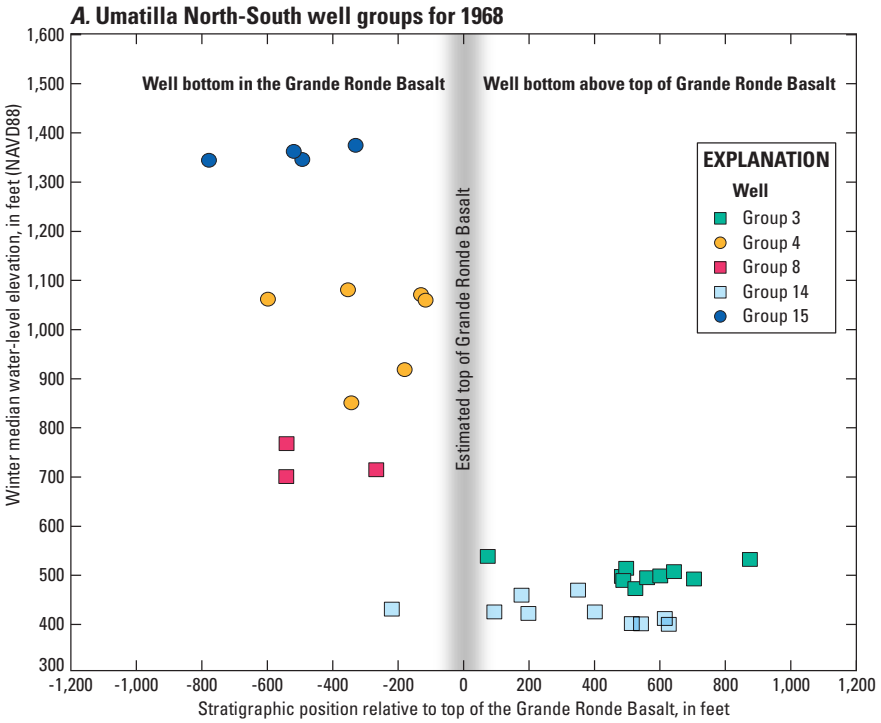

Figure 12. Estimated stratigraphic position (distance from the well bottom to the simulated top of Grande Ronde Basalt) compared with winter median water-level elevation in selected wells within and immediately adjacent to the Oregon Water Resources Department administrative areas in the Umatilla Basin, Oregon, 1968, 1984, and 2006. (*A*–*C*) North–South group; and (*D*–*F*) East–West group. Locations of groups are shown in figure 10.

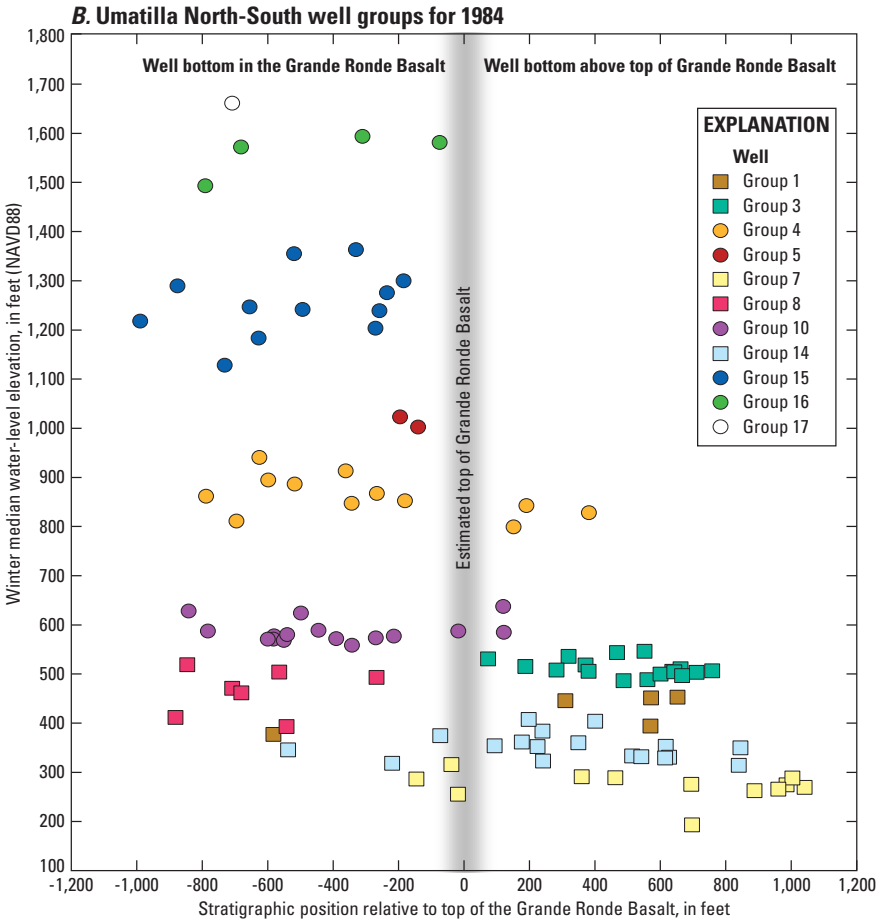

Figure 12.—Continued

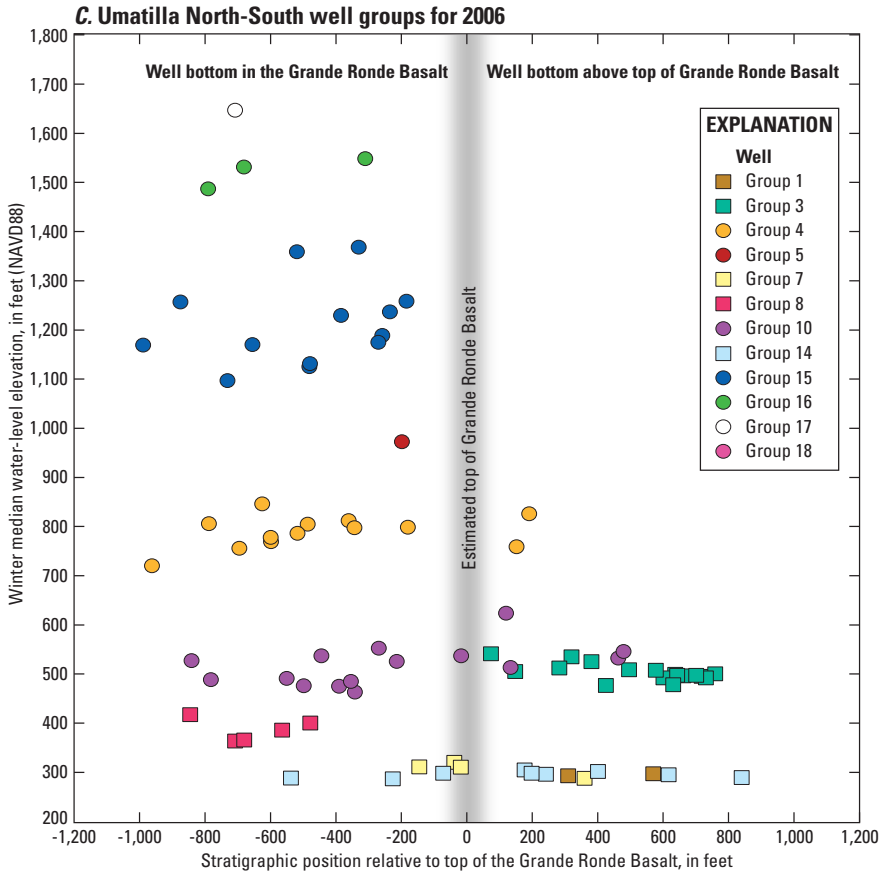

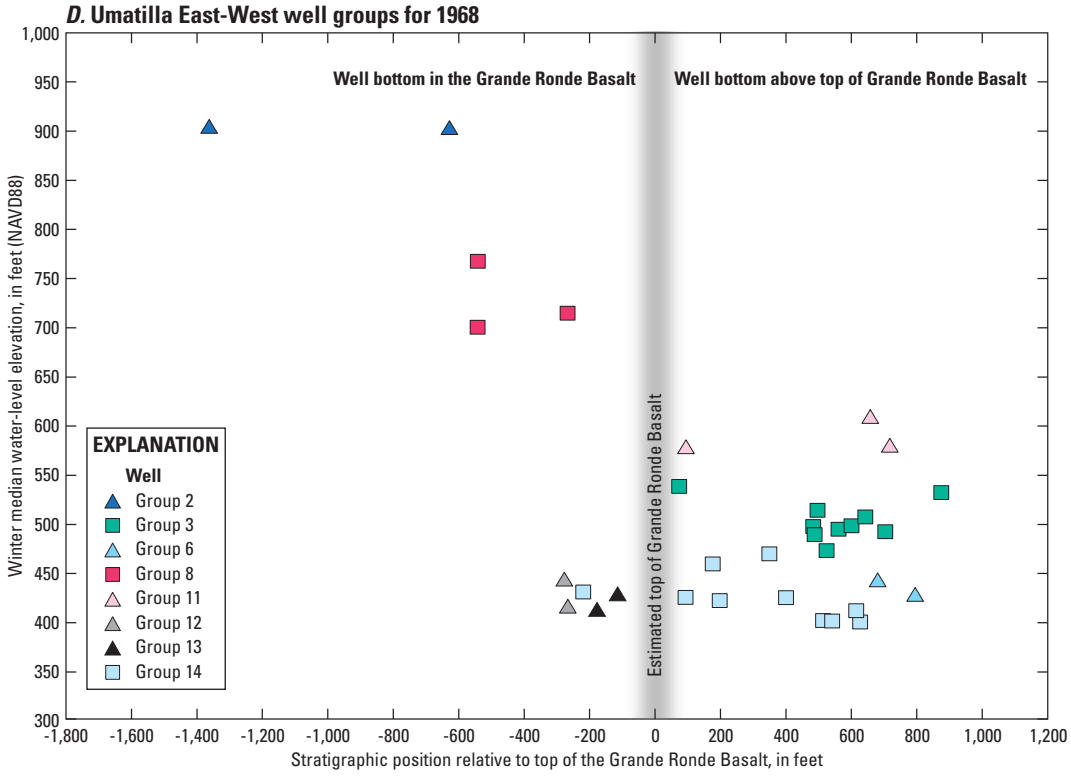

Figure 12.—Continued

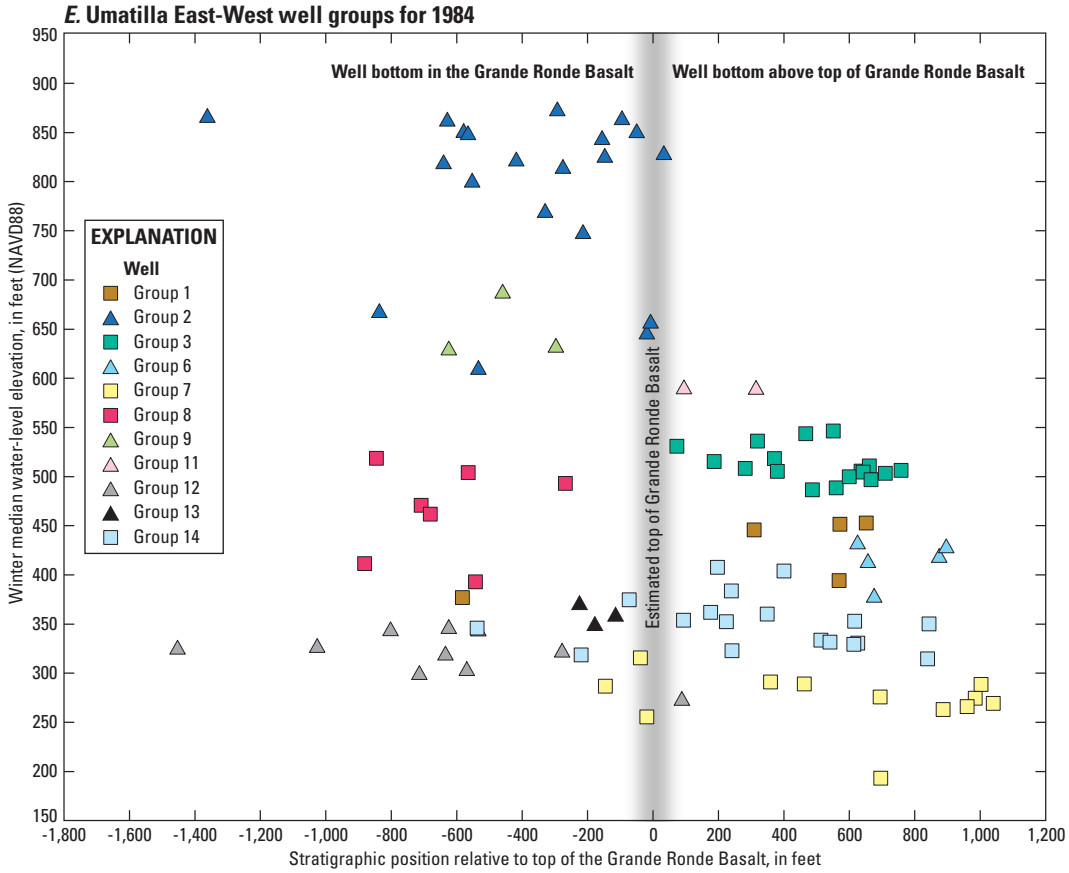

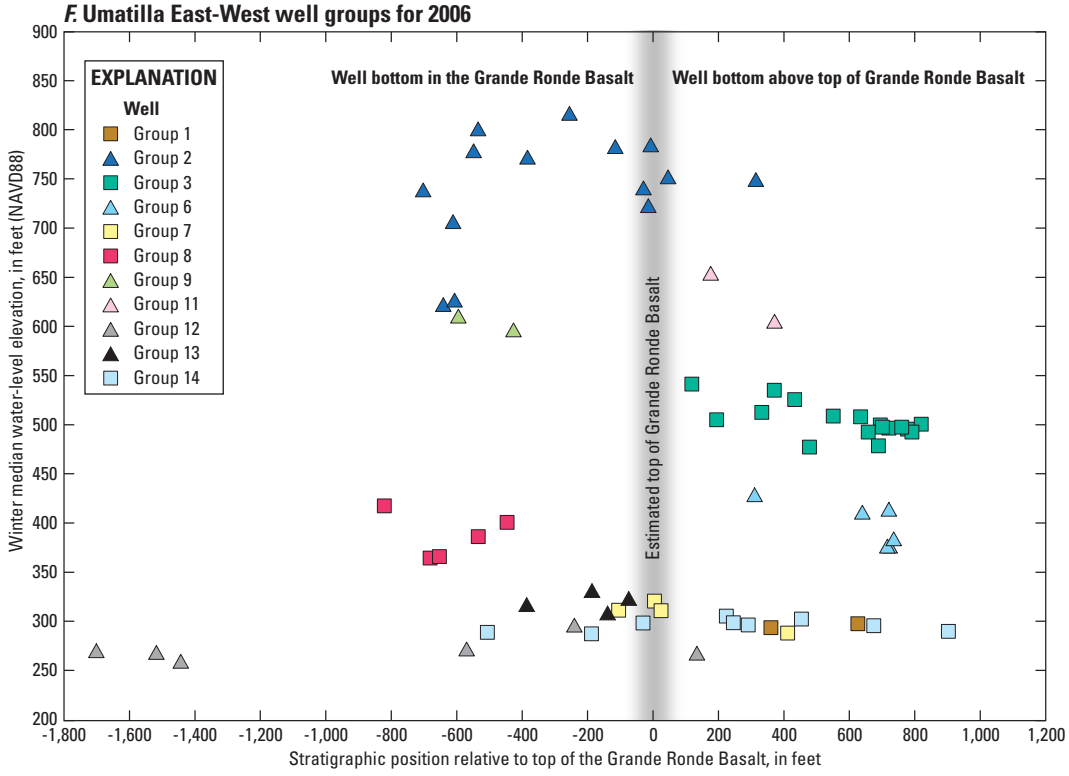

Figure 12.—Continued

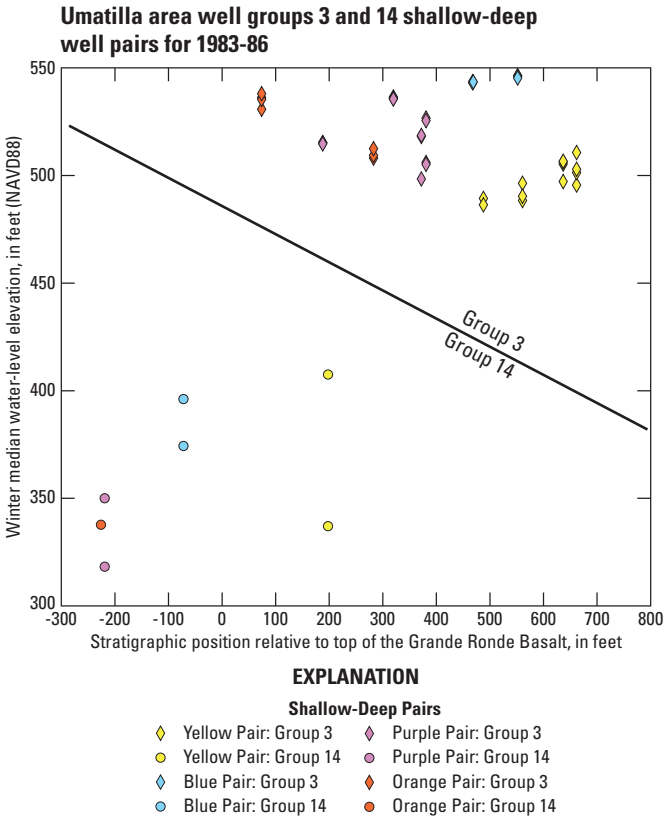

Figure 13. Stratigraphic position (distance from the well bottom to the simulated top of Grande Ronde Basalt) compared with winter median water level measured in wells for shallow–deep well pairs from groups 3 and 14 near the Oregon Water Resources Department administrative areas in the Umatilla Basin, Oregon. Colors of points correspond to colors of shallow-deep pair circles in figure 10.

Barriers to groundwater flow result from primary characteristics of the basalt, the depositional environment, and post-depositional folding and faulting. Vertical flow barriers typically result when aquifers are separated by dense impermeable CRBG lava flow interiors that are laterally extensive. Near flow margins, however, the dense interiors are discontinuous, and aquifers may be well-connected hydraulically. In the OWRD administrative areas, vertical separation is apparent only in the groundwater-level data near groups 6 (light blue triangles), 11 (pink triangles), and 14 (light blue squares), which have higher hydraulic heads than nearby wells completed in lower stratigraphic units. For example, the head in group 3 wells stayed nearly constant at about 500 ft, whereas the deeper group 14 wells have shown declines in groundwater elevation from about 450 to about 300 ft since the 1960s (fig. 11*B*).

For all other well groups, there is a conspicuous lack of vertical hydraulic gradients across thick sequences of lava that should contain many individual lava flows. Within most groups a uniform hydraulic head exists across thousands of feet of basalt thickness despite the fact that many (approximately 100-ft thick) lavas are intersected (fig. 12*A*–*F*; ideal behavior is shown in fig. A1*D*). These hydraulic heads are uniform even though the older lava flows were more extensive than the younger flows, which implies that dense flow interiors should separate the aquifers, creating the conditions necessary for vertical hydraulic gradients. The uniformity of hydraulic heads in these aquifers may be the result of hydraulic equilibration through commingling wells. For confined or other low storage aquifers, time for equilibration can be short. In the Mosier Watershed, Oregon, commingled wells equilibrated within 2 years (Burns and others, 2012). Because groundwater-level monitoring typically begins after multi-year declines have been documented, data representing pre-commingling conditions are limited.

Examination of the mapped geologic structure shows horizontal compartmentalization is frequently correlated to the structure, although not always. The correlation along the Willow Creek monocline in groups 4 (orange circles), 5 (dark red circles), 10 (purple circles), and 15 (dark blue circles) show consistent head patterns along the sinuous fold structure and high head differences between the groups across the fold indicating that the fold functions as a longitudinal conduit and a perpendicular barrier to groundwater flow (figs. 10 and 11*A*). The Service anticline also is an apparent horizontal flow barrier, although the deeper aquifers have complex, yet similar patterns particularly later in time, which indicates that some aquifers may be better hydraulically connected across the structure than others, indicating that commingling may be rendering this barrier less effective over time. To the contrary, the Reith anticline apparently is not a horizontal barrier to flow between the Pendleton area and the eastern side of the Stage Gulch administrative area as evidenced by group 2 wells (dark blue triangles) in figure 11*B*. From north to south, the hydraulic gradients increase proportionally to the amount of geologic structure (compare water levels from figure 11*A* to the well locations in figure 10), indicating that geologic structure may be impeding lateral recharge from the uplands. Curiously, the exceptionally high hydraulic head contrast between groups 2 and 12 (gray triangles) (figs. 10 and 12*D*–*E*) does not correspond to a mapped geologic structure, indicating the presence of a previously unmapped geologic feature.

Near the OWRD administrative areas, a few shallow CRBG aquifers (groups 3 [dark green squares], 6 [light blue triangles], 7 [yellow squares], and 11 [pink triangles]) are receiving recharge from irrigation projects and have stable or slightly rising hydraulic heads (fig. 11*B*). Water levels in many of the deeper CRBG aquifers, in contrast, have declined 100–300 ft since 1970 as shown in groups 4 (orange circles), 8 (red squares), 10 (purple circles), and 14 (light blue squares) (fig. 11*A*). Hydraulic heads in groups 15 [dark blue circles], 16 [green circles], 17 [white circles], and 18 [magenta circles] (figs. 10 and 11*A*) to the south have lower total decline because they are protected from the high pumping rates in the north by horizontal flow barriers immediately north of these groups.

Palouse Slope/Eastern Yakima Fold Belt, Washington

The Palouse Slope and the eastern Yakima Fold Belt (fig. 1), which forms a transition area between the two physiographic provinces, encompass the entire area of the Columbia Basin GWMA (hereafter referred to as the Palouse Slope/eYFB). Within the GWMA, WADOE has established several administrative areas (Ground Water Management Subareas) that cover most locations with large long-term groundwater-level declines (Washington State Department of Ecology, 1988a, 1988b, and 1988c). These include the Odessa, Quincy, and 508-14 subareas (fig. 14). The largest groundwater-level declines measured in the central GWMA (1968–2009) are along a north-south swath near the center of the area (fig. 14). Hydrographs for 1,195 wells blanketing the area of largest declines in the CRBG aquifers were examined and divided into groups of wells exhibiting similar changes in hydraulic head over time and a subset of these groups was selected to illustrate these trends (fig. 15). Horizontal barriers to flow are not as evident in this area as in the Umatilla area, but groups are still identifiable based on similar response to hydraulic stresses. This is consistent with the geologic interpretation of the Palouse Slope as being a gently folded structure created during subsidence where CRBG lavas were deposited in voluminous sheet flows. For this area, hydrographs of well groups are most easily viewed along general flow paths that have developed as the result of irrigation stresses on the aquifer system (fig. 15). These flow paths generally trend toward the area with large declines (fig. 14).

Figures 16–19 present hydrographs showing the winter median water levels for individual wells within each well group shown in figure 15 and the trend line for each group constructed using the statistical software program, TIBCO Spotfire S+ (TIBCO Software, Inc., 1988–2008). Water levels in wells in groups 1 (pink circles), 2 (light blue circles), 3 (dark green circles), and 4 (black circles and white circles for shallow and deep wells, respectively) associated with the western flow path (shown as circles in figure 15) start to rise during the 1950s (fig. 16). Prior to 1950, the limited data suggest lower groundwater levels and flatter hydraulic gradients. After 1950, groundwater levels rise and the hydraulic gradient steepens from west to east indicating increased groundwater flow toward Moses Lake and farther east where groundwater declines are associated with widespread irrigation from groundwater.

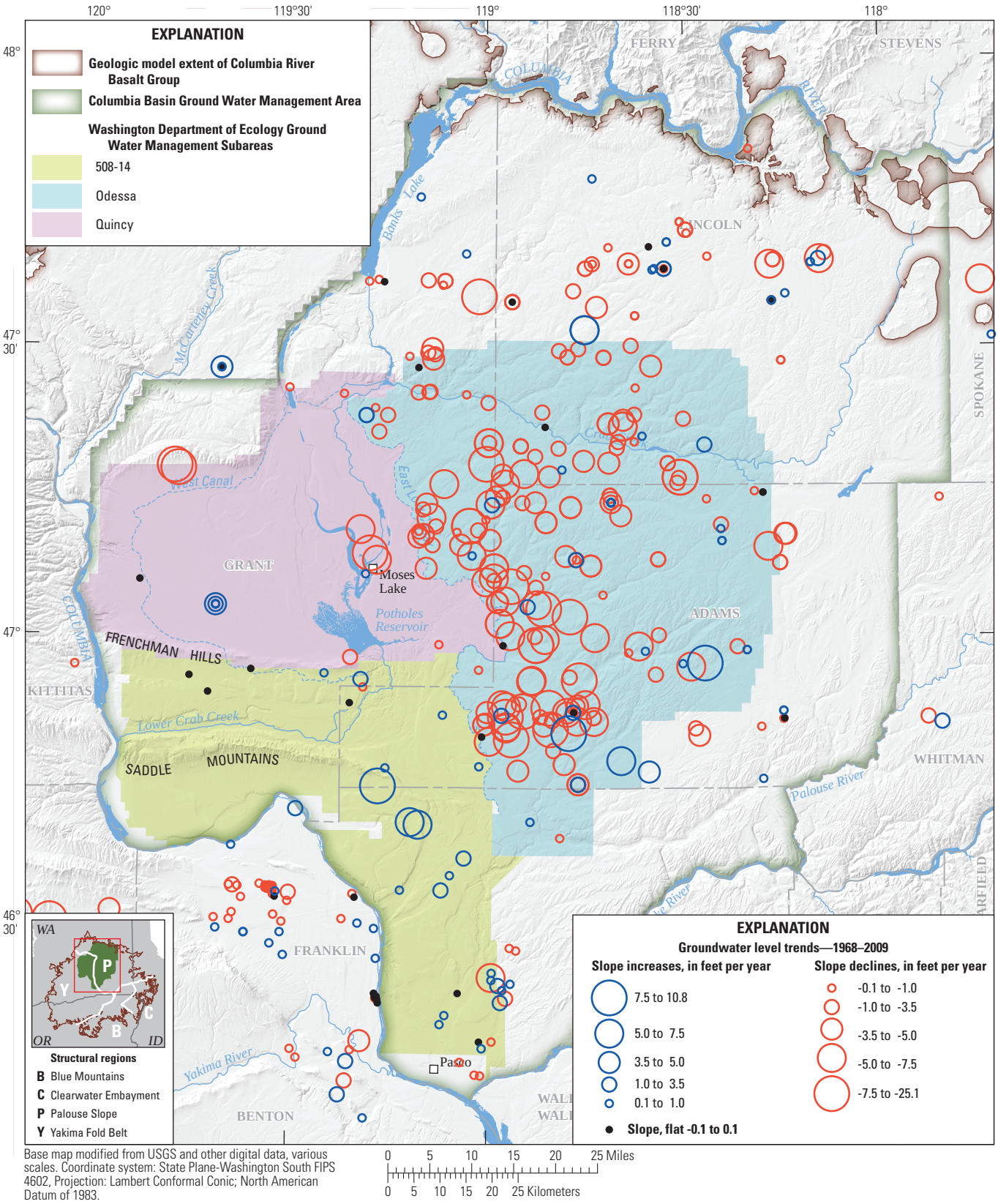

Base map modified from USGS and other digital data, various scales. Coordinate system: State Plane-Washington South FIPS 4602, Projection: Lambert Conformal Conic; North American Datum of 1983.

Figure 14. Distribution of groundwater-level trends for 1968–2009 relative to the Washington State Department of Ecology administrative areas in parts of the Palouse Slope/eastern Yakima Fold Belt and the Columbia Basin Ground Water Management Area, Washington.

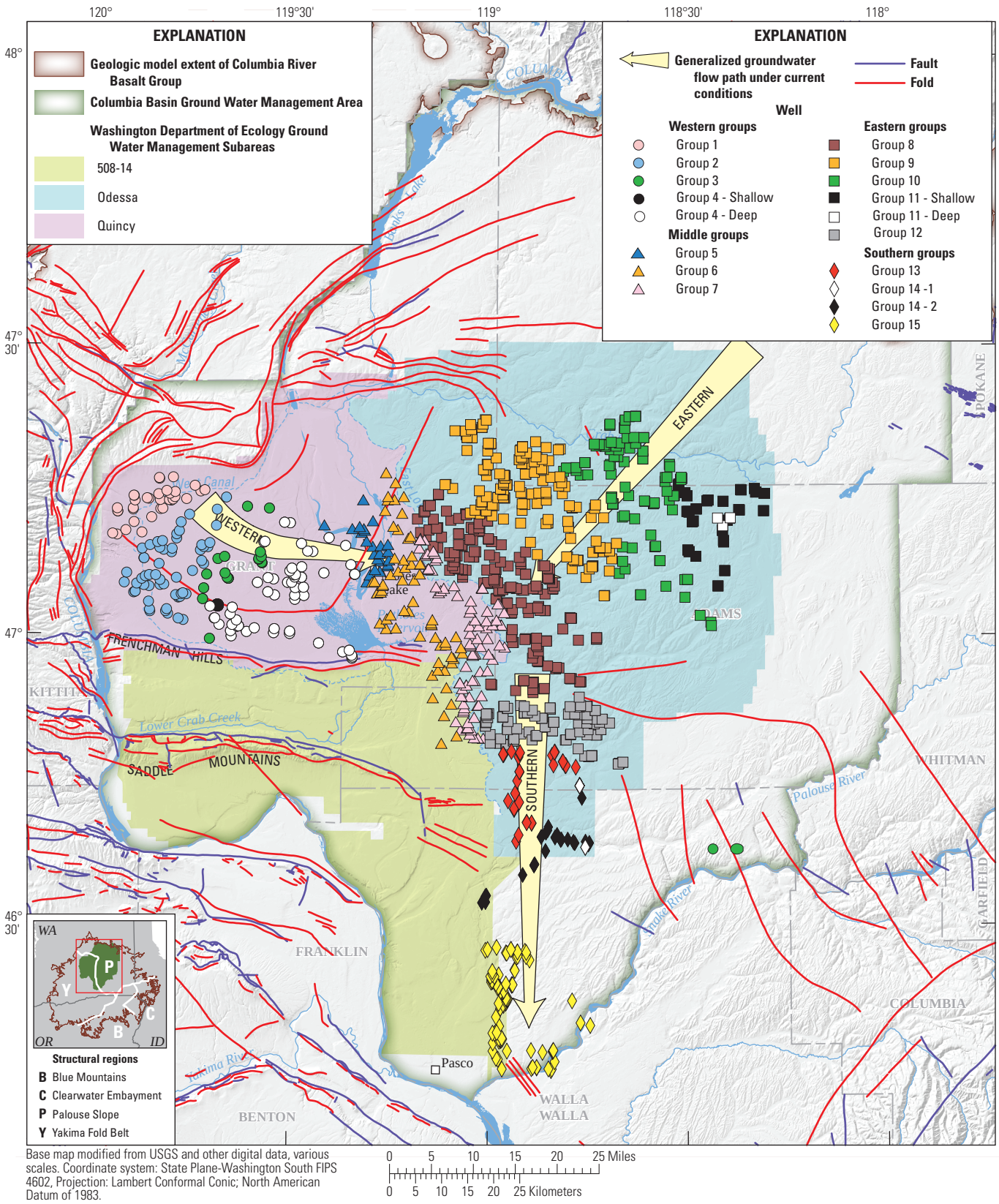

Figure 15. Generalized groundwater-flow paths under 2000–2010 conditions through sets of well groups with similar hydraulic response near the Washington State Department of Ecology administrative areas in parts of the Palouse Slope/eastern Yakima Fold Belt and the Columbia Basin Ground Water Management Area, Washington.

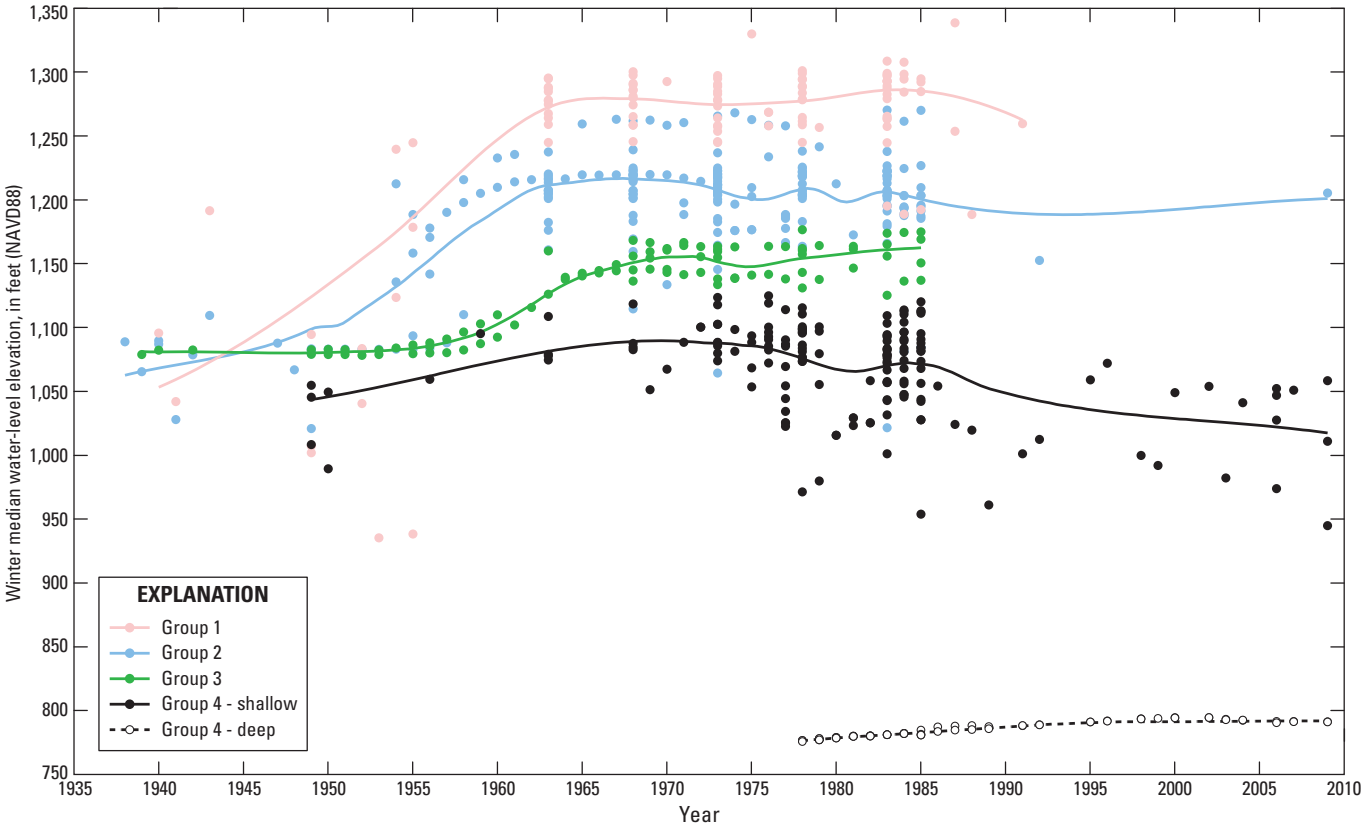

Figure 16. Groups of wells corresponding to the western flow path near the Washington State Department of Ecology administrative areas in parts of the Palouse Slope/eastern Yakima Fold Belt and the Columbia Basin Ground Water Management Area, Washington. Hydrographs depict the winter median water level for individual wells within each well group and the trend line representing the overall water-level trend of all wells in the group. Well locations and flow paths are shown in figure 15.

The wells in groups 8 (brown squares), 9 (orange squares), 10 (dark green squares), 11 (black squares and white squares, shallow and deep), and 12 (gray squares) associated with the eastern flow path (shown as squares in figure 15) show a hydraulic gradient sloping from northeast to southwest, down the Palouse Slope (fig. 17). Water-level declines for most of these wells begin after 1970. Group 11 shallow wells (black squares) are less affected, indicating hydraulic separation between most of these wells and the wells downslope (to the west). The wells showing significant declines exhibit various decline patterns, although total drawdown is similar in most wells.

Between the eastern and western flow paths and well groups, there is a middle set of well groups, groups 5 (dark blue triangles), 6 (orange triangles), and 7 (pink triangles), (shown as triangles in figure 15), with transitional behavior of groundwater levels. Groundwater levels in most of these wells begin to increase about 1950, as observed with the western well groups. Some of these wells also show groundwater-level declines starting in the 1970s as observed with the eastern well groups (fig. 18). Since 1970, a groundwater mound has formed between Moses Lake, Potholes Reservoir, and the eastern flow path wells. Groundwater-levels in groups 6 (orange triangles) and 7 (pink triangles) generally are higher than in groups to the east and west, which consist of group 4 shallow (black circles), group 5 (dark blue triangles), group 8 (brown squares), and group 12 (gray squares) (figs. 15–18).

The southern well groups (groups 13 [red diamonds], 14 [black diamonds and white diamonds], and 15 [yellow diamonds]) associated with the southern flow path (shown as diamonds in figure 15) show a hydraulic gradient from north to south toward the Snake River (fig. 19), which locally has an elevation of about 350 ft. The hydraulic behavior is complex, although the narrow spacing between adjacent well groups and dissimilar temporal changes indicates there may be some hydraulic barriers between these groups.

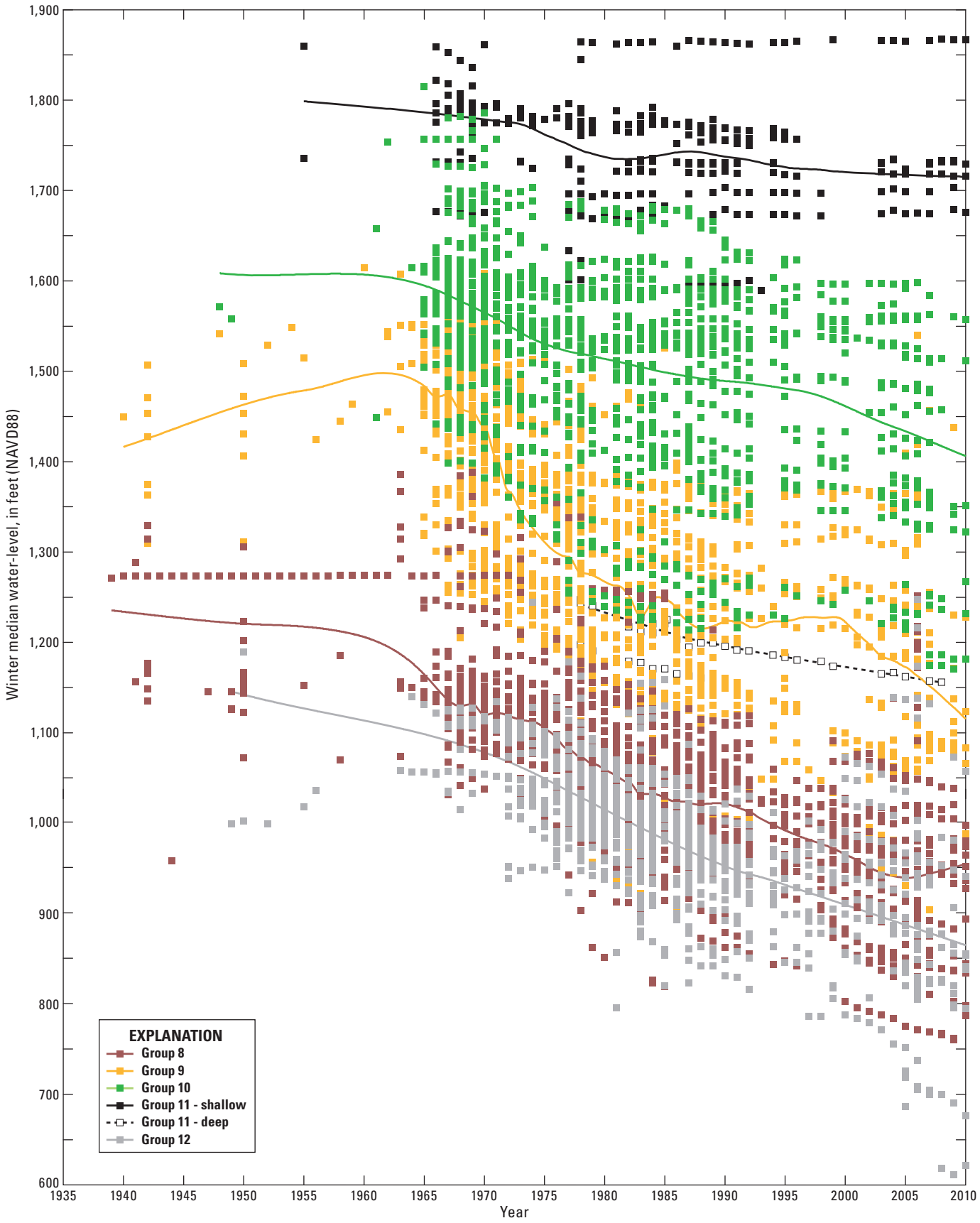

Figure 17. Groups of wells corresponding to the eastern flow path near the Washington State Department of Ecology administrative areas in parts of the Palouse Slope/eastern Yakima Fold Belt and the Columbia Basin Ground Water Management Area, Washington. Hydrographs depict the winter median water levels for individual wells within each well group and the trend line representing the overall water-level trend of all wells in the group. Well locations and flow paths are shown in figure 15.

The hydraulic behavior of group 12 (gray squares) is at the nexus of the eastern, middle, and southern well groups and apparently is influenced by each of the adjacent groups (figs. 17 and 19), although its component wells are not easily separated into the adjacent groups based on location. Hydraulic head values for group 12 wells commonly are intermediate between the other groups, with some wells exhibiting declines similar to group 8 (brown squares) wells from the eastern well groups (fig. 17), and other group 12 water levels rising similarly to water levels in group 7 wells (pink triangles) from the middle well groups (fig. 18). No clear pattern of depth or location allows group 12 wells to be subdivided into the adjacent groups.

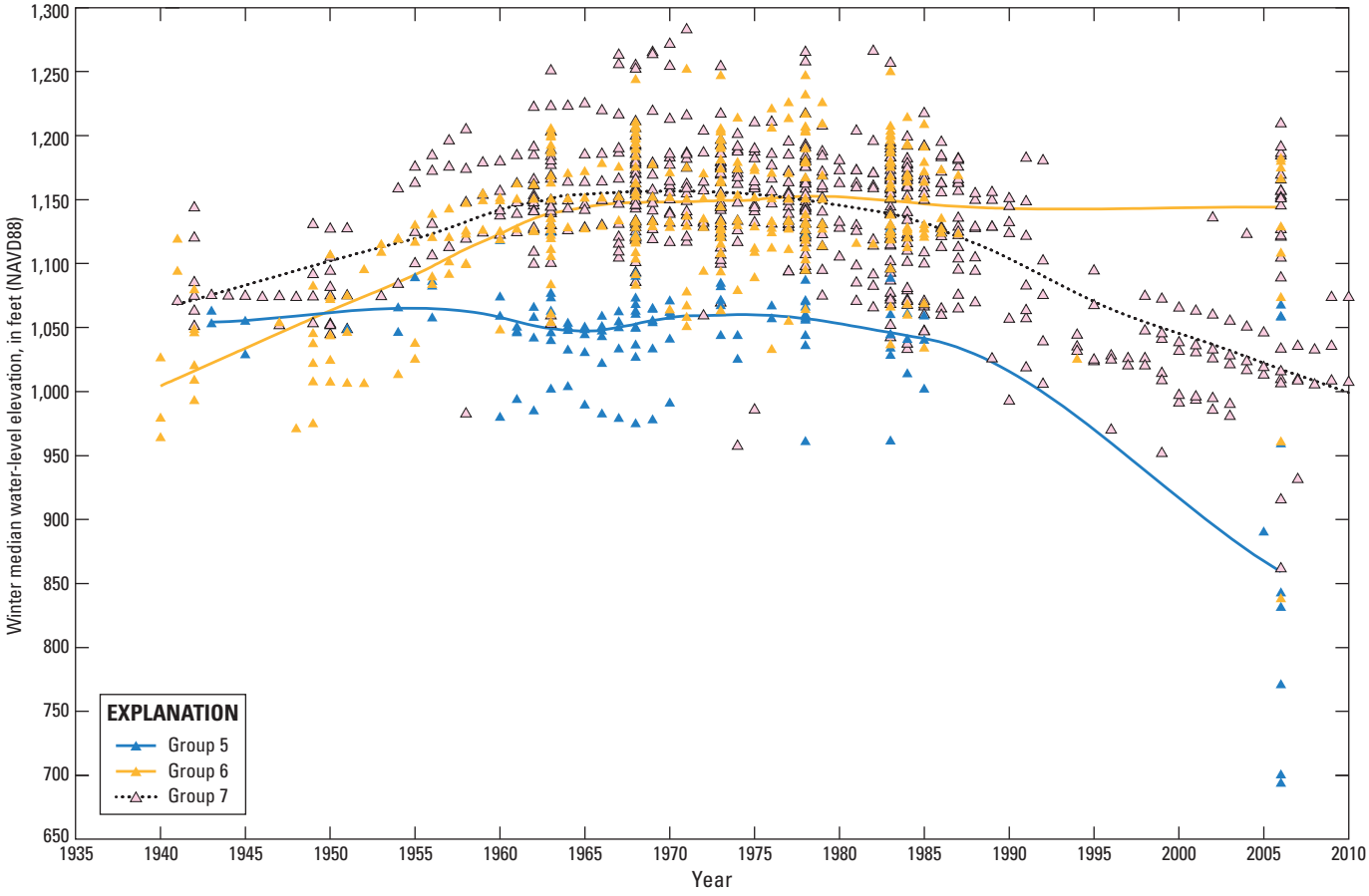

Figure 18. Middle groups of wells near the Washington State Department of Ecology administrative areas in parts of the Palouse Slope/eastern Yakima Fold Belt and the Columbia Basin Ground Water Management Area, Washington. Hydrographs depict the winter median water levels for individual wells within each well group and the trend line representing the overall water-level trend of all wells in the group. Well locations are shown in figure 15.

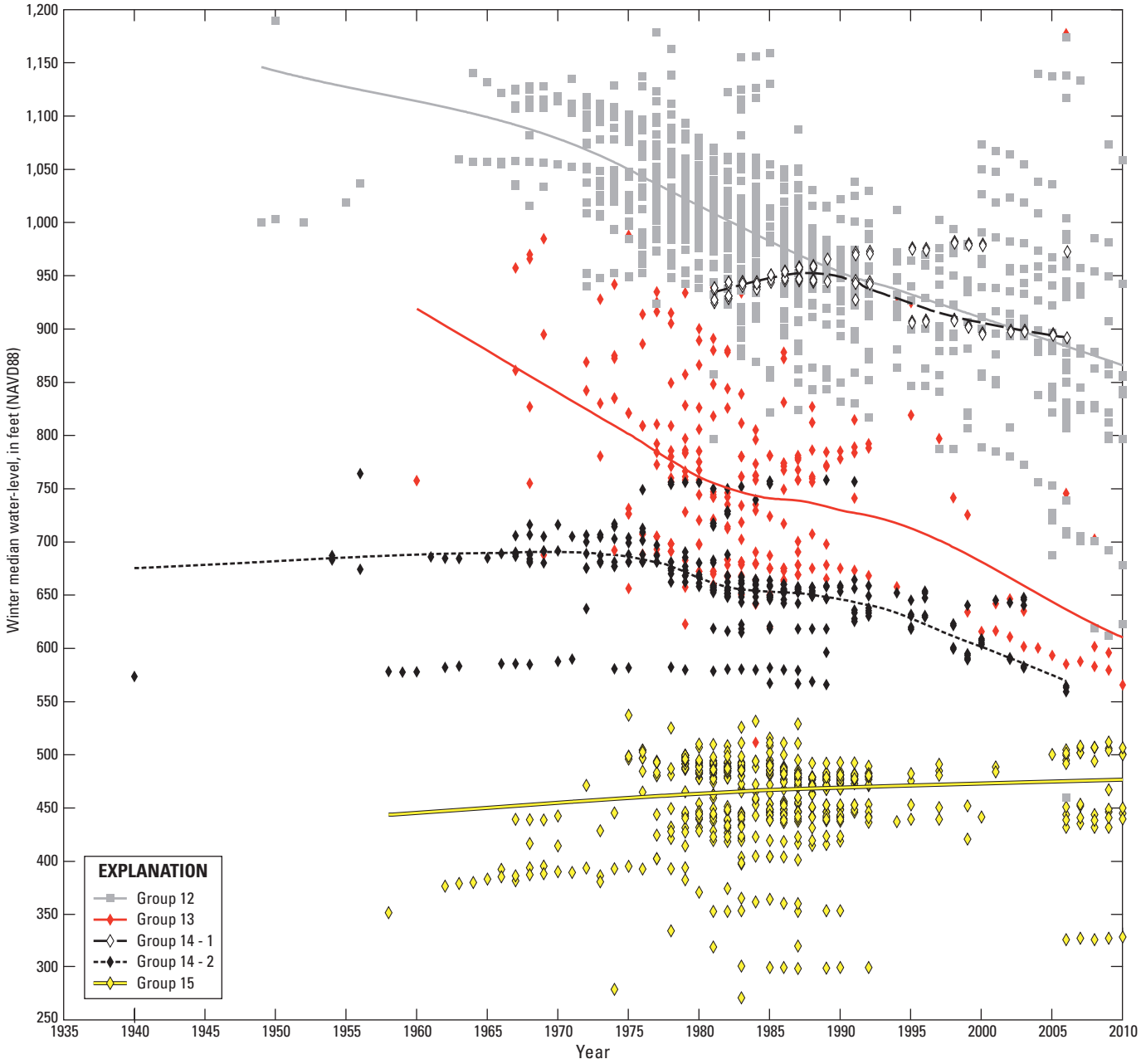

Figure 19. Groups of wells corresponding to the southern flow path near the Washington State Department of Ecology administrative areas in parts of the Palouse Slope/eastern Yakima Fold Belt and the Columbia Basin Ground Water Management Area, Washington. An additional hydrograph for a proximal group of wells (group 12) is shown to illustrate the relation between well groups. Hydrographs depict the winter median water levels for individual wells within each well group and the trend line representing the overall water-level trend of all wells in the group. Well locations and flow paths are shown in figure 15.

Water levels on the Palouse Slope/eYFB were plotted against stratigraphic position relative to the simulated top of the Grande Ronde Basalt (fig. 20*A*–*I*). Analogous to the head distribution in the Umatilla area, heads are similar over large vertical intervals of basalt in the Palouse Slope/eYFB area indicating possible commingling of aquifers. Unlike the Umatilla area, even within a well group and for closely spaced wells, those wells constructed at the same elevation may have hydraulic heads hundreds of feet different from each other. This noisy data and the lack of apparent flow barriers between well groups, results in overlap of the hydrographs between groups. Even within well groups, division of hydrographs by approximate stratigraphic layer does not yield smoothly-varying groundwater-level data that generates well-behaved potentiometric surface maps. This may be due to the complex connectivity between wells and commingled aquifers resulting in a range of composite head elevations (fig. 6).

Generalized potentiometric surfaces were developed for pre-development conditions (prior to 1951; fig. 21) and post-2000 conditions (fig. 22). Relatively high-error generalized surfaces were created using all CRBG wells without distinction between CRBG hydrogeologic unit because hydrographs within well groups show consistent general trends (figs. 16–19); however, few measurements within each group support the division of wells into hydraulically distinct zones vertically (fig. 20). Figures 21 and 22 were constructed by using median water levels for the defined periods for each CRBG well, and smoothing the data with LOESS local linear trend models (Cleveland and others, 1992). At any location, potential error of the simulated hydraulic head is high; the measured value could be hundreds of feet higher or lower than these generalized surfaces. Because trend models were used, fit is biased toward shallow data because few deep wells with significantly different water-levels were measured (fig. 20). However, when evaluating model fit, there is little spatial bias in the residuals between the measurement points and predicted surface; therefore, the resulting surfaces are good representations of the patterns in the hydrograph groups. Because of the large amount of smoothing of these potentiometric surfaces, smaller scale features associated with streams and structural barriers to flow, for example, the Frenchman Hills (fig. 1) are not well represented.

Groundwater flow during the pre-development period was from the uplands in the northeastern part of the GWMA toward the Columbia and Snake Rivers to the west and south, respectively (fig. 21). Although the locations where groundwater has the potential for local drainage to surface water features are shaded (fig. 21), the generalized potentiometric surface was not corrected for interaction with surface drainages because flow to local streams depends on the hydraulic head and local connection between the aquifers and the streams. Following the onset of large surface-water irrigation projects near Moses Lake (fig. 22) in the 1950s, water levels in the upper CRBG aquifers increased and formed a groundwater mound, resulting in a reversal of the hydraulic gradient toward the area of declines (compare figs. 14, 21, and 22). For wells examined, groundwater levels under surface-water irrigation areas typically rise about 50 ft, with larger rises occurring locally (for example, in the fault bounded valleys to the south of the Frenchman Hills and the Saddle Mountains). To the east, in the south central area of the GWMA where groundwater pumping is the primary source of irrigation, a trough-shaped depression sloping toward the south has formed, and groundwater flows toward it from east and west (fig. 22). The axis of the trough generally is coincident with the easternmost area of dense irrigation pumping of groundwater shown in the center of figure 22, much of which is occupied by well group 8 (brown squares) in figure 15.

Because most well groups do not exhibit pronounced persistent vertical gradients, the potential for commingling to contribute to hydraulic head declines in this area is not clear from the data. The limited data show that a significant downward hydraulic gradient is present in the eastern and western well groups (group 4 shallow [black circles] and deep [white circles] wells in figures 16 and 20*B*–*C*, group 11 shallow [black squares] and deep [white squares] wells in figures 17 and 20*E*). Large vertical head differences apparently are abrupt in groups 4 and 11, while other well groups (for example group 10 [dark green squares] in figures 20*E*–*F*) show vertical gradients that are more continuous and exhibit considerable variability. The downward vertical gradients are consistent with the geologic model (Burns and others, 2011) that shows the deeper aquifers are exposed through erosion along the Snake and Columbia Rivers at elevations consistent with the lower hydraulic heads in these deeper units. In addition, hydraulic heads in the southern well groups are lower than in the trough-like cone of depression immediately to the north (fig. 22), indicating that natural or commingled well leakage might be allowing flow to pass through the possible horizontal flow barrier between group 12 (gray squares) and group 13 (red diamonds) (figs. 15 and 19). The complexity in flow near group 13 is further illustrated by the hydraulic head patterns of groups 13 and 14 (figs. 19 and 20*G*–*I*). Despite the fact that group 14 may be divided into two groups with apparently distinct behavior, groups 14-1 (white diamonds) and 14-2 (black diamonds) cannot be separated laterally or into shallow and deep groups, although each of these groups show similar post-1980 characteristics with various group 13 wells (figs. 19 and 20*H*–*I*).

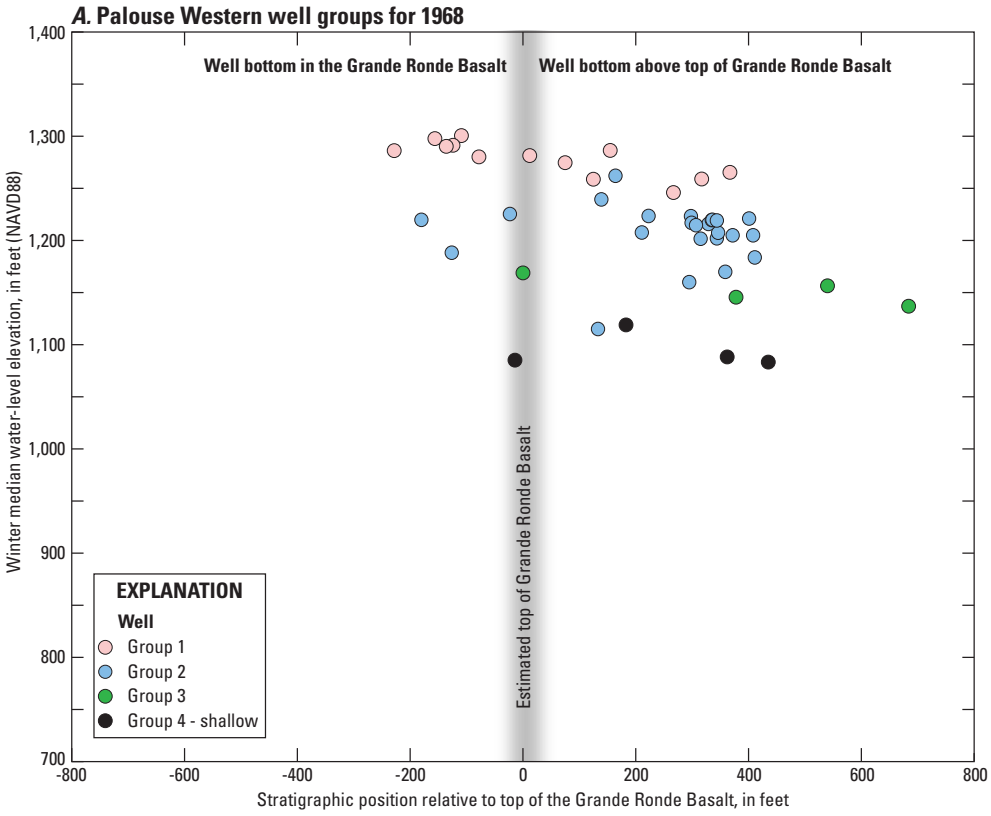

Figure 20. Distance of the well bottom from the simulated top of Grande Ronde Basalt compared with water levels measured in wells near the Washington State Department of Ecology administrative areas in parts of the Palouse Slope/eastern Yakima Fold Belt and the Columbia Basin Ground Water Management Area, Washington. Palouse western well group for (*A*) 1968; (*B*) 1984; (*C*) 2006; Palouse eastern well group for (*D*) 1968; (*E*) 1984; (*F*) 2006; and Palouse southern well group for (*G*) 1968; (*H*) 1984; and (*I*) 2006. Locations of groups are shown in figure 15.

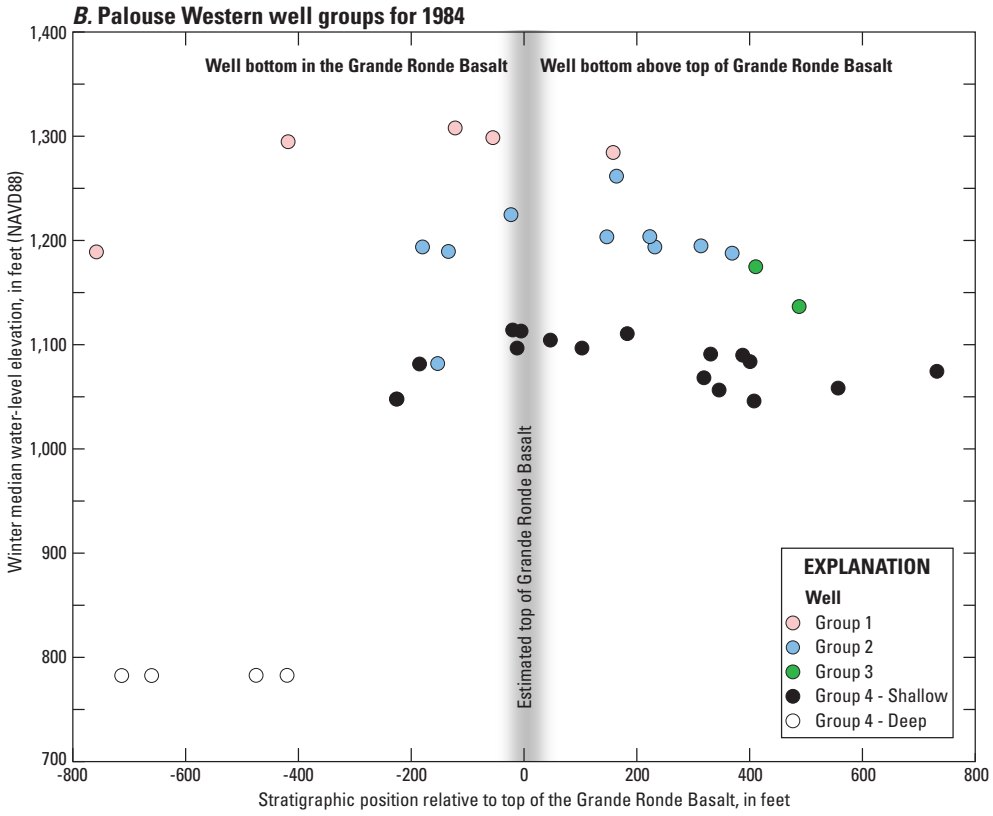

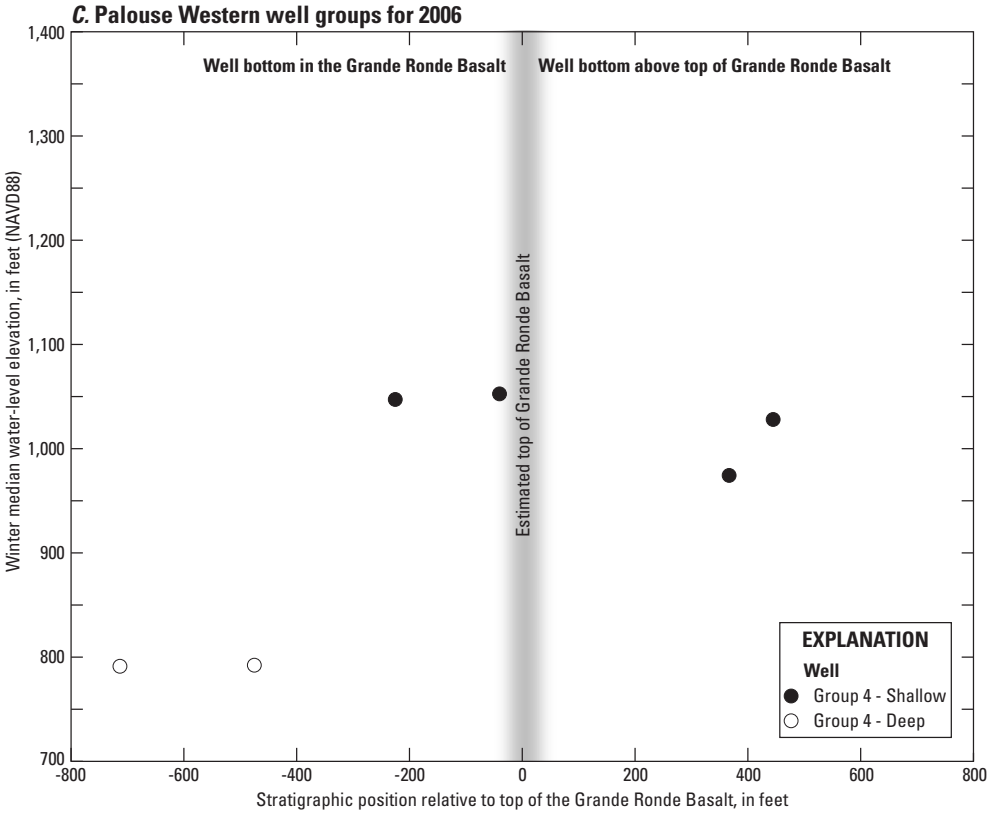

Figure 20.—Continued

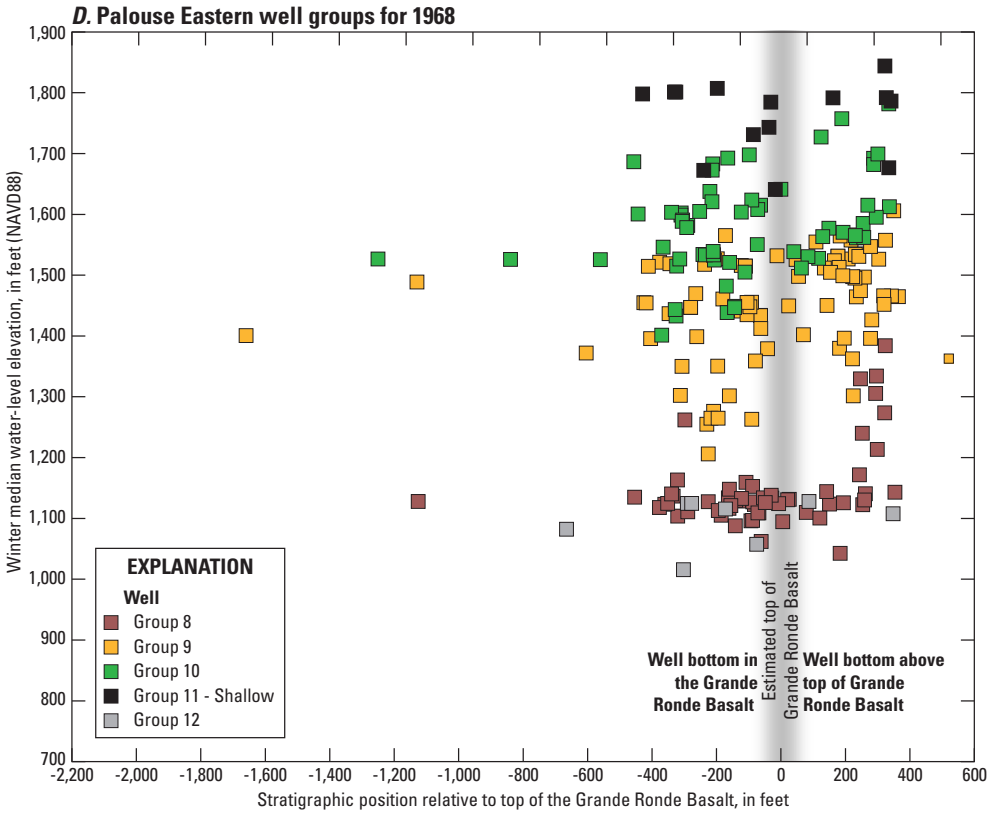

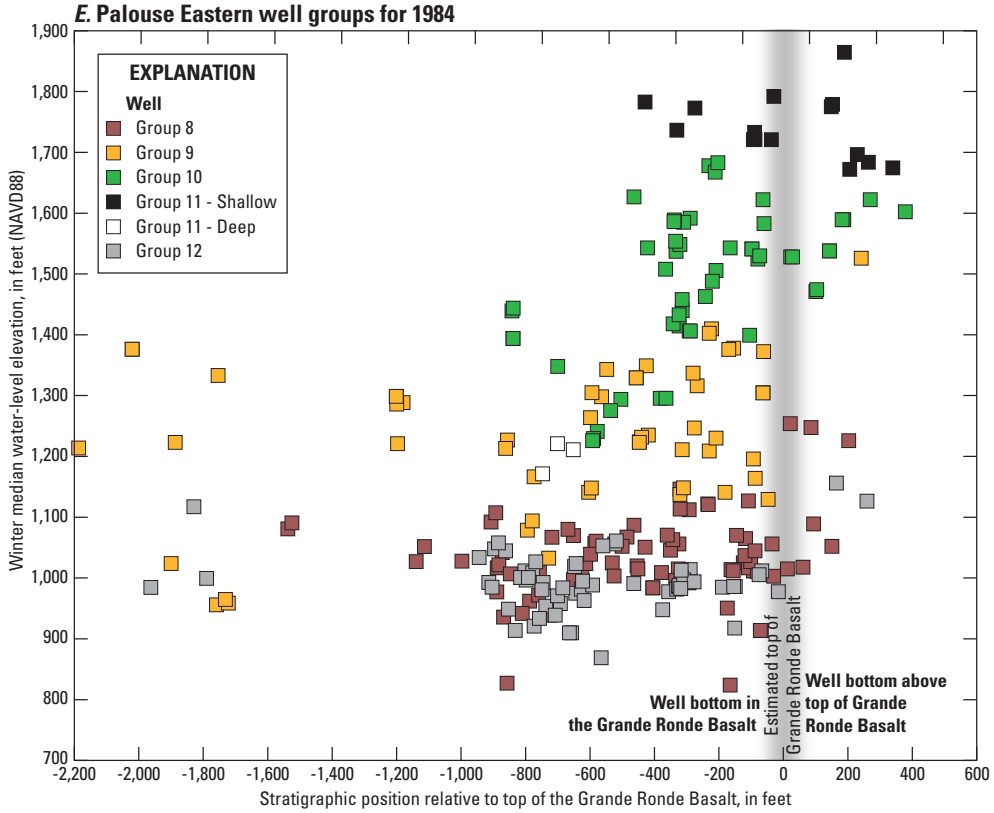

Figure 20.—Continued

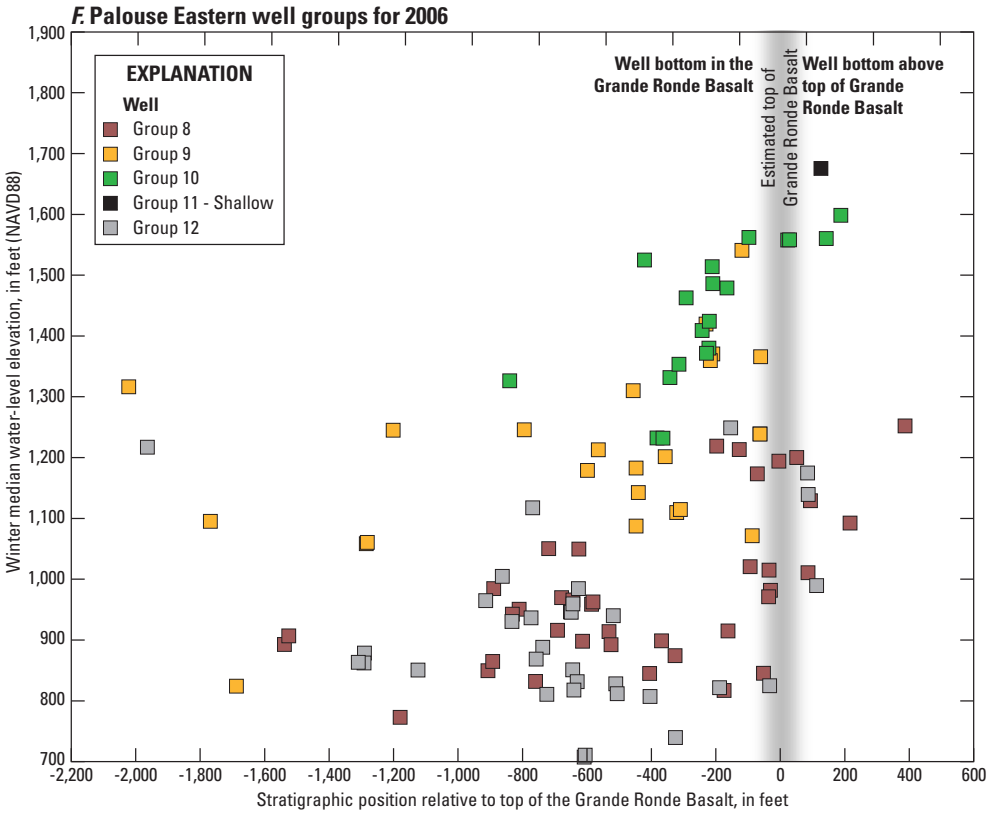

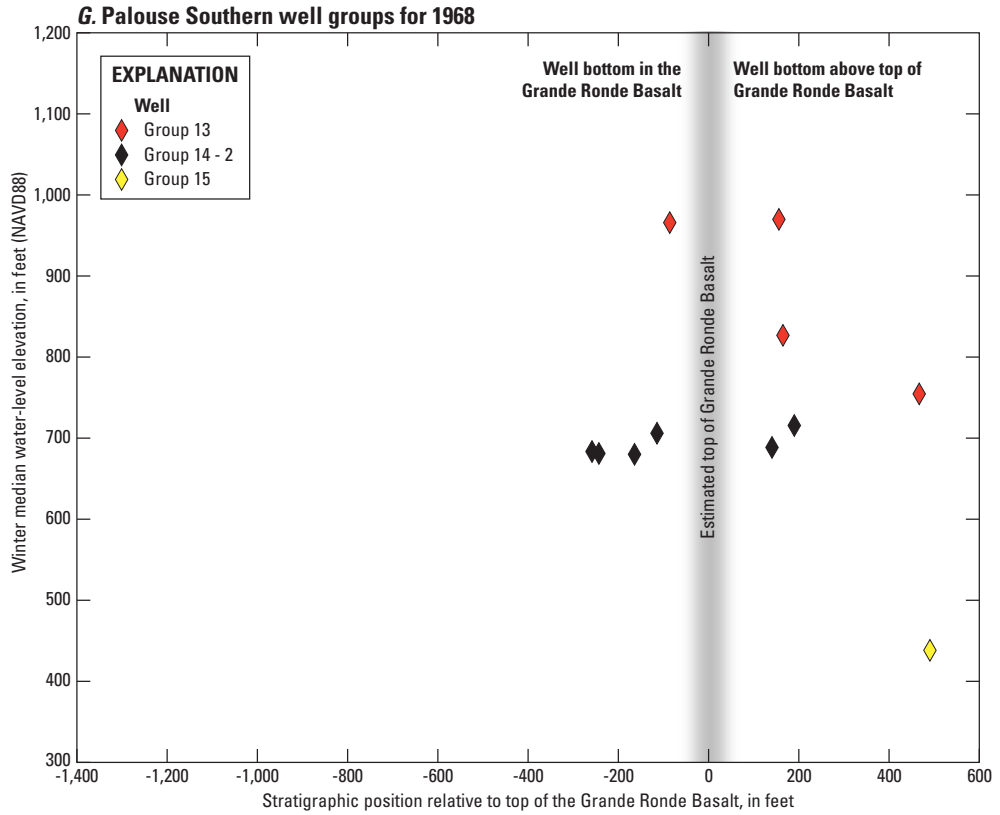

Figure 20.—Continued

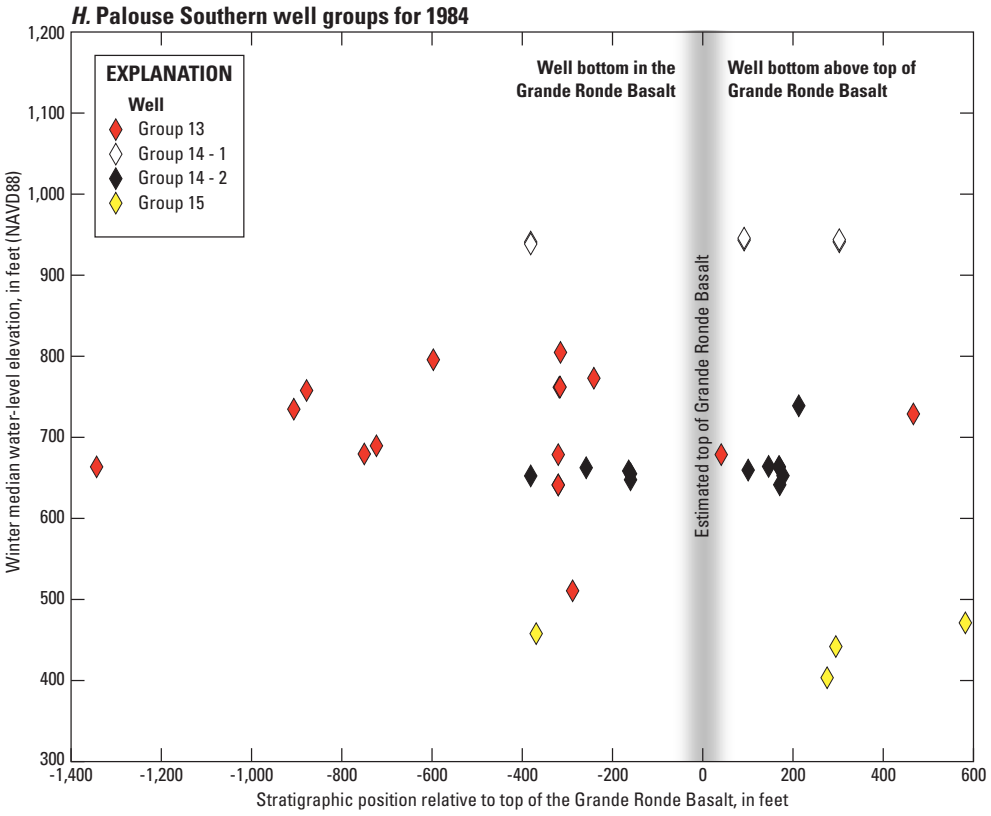

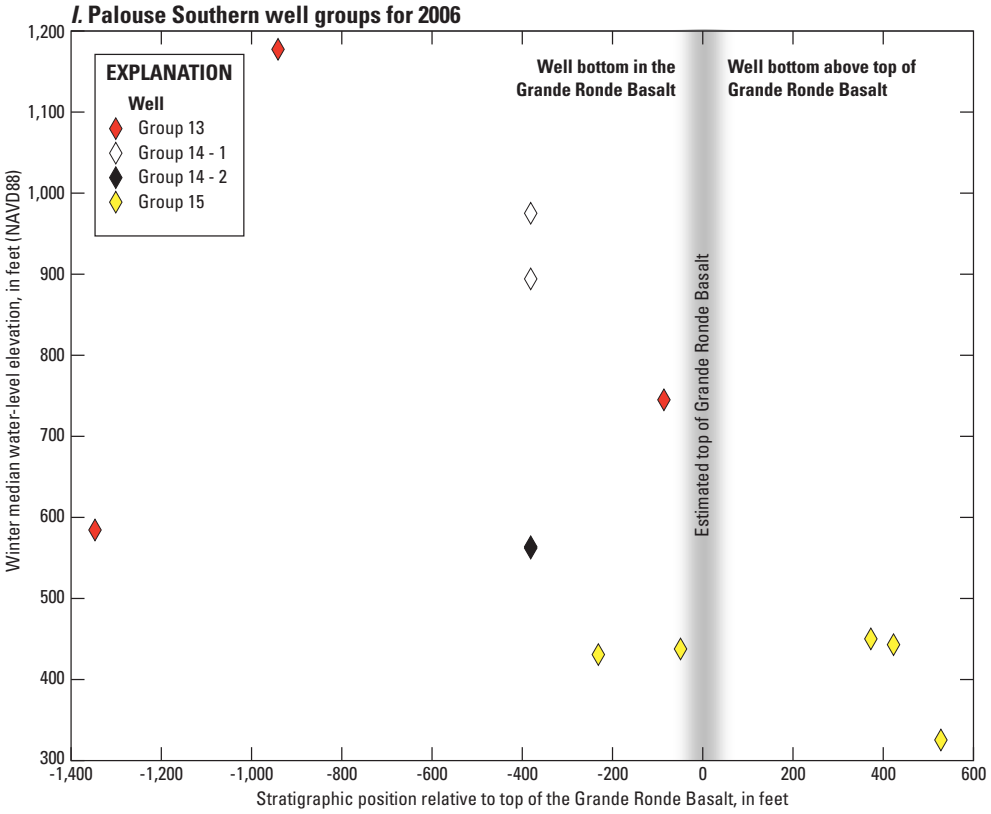

Figure 20.—Continued

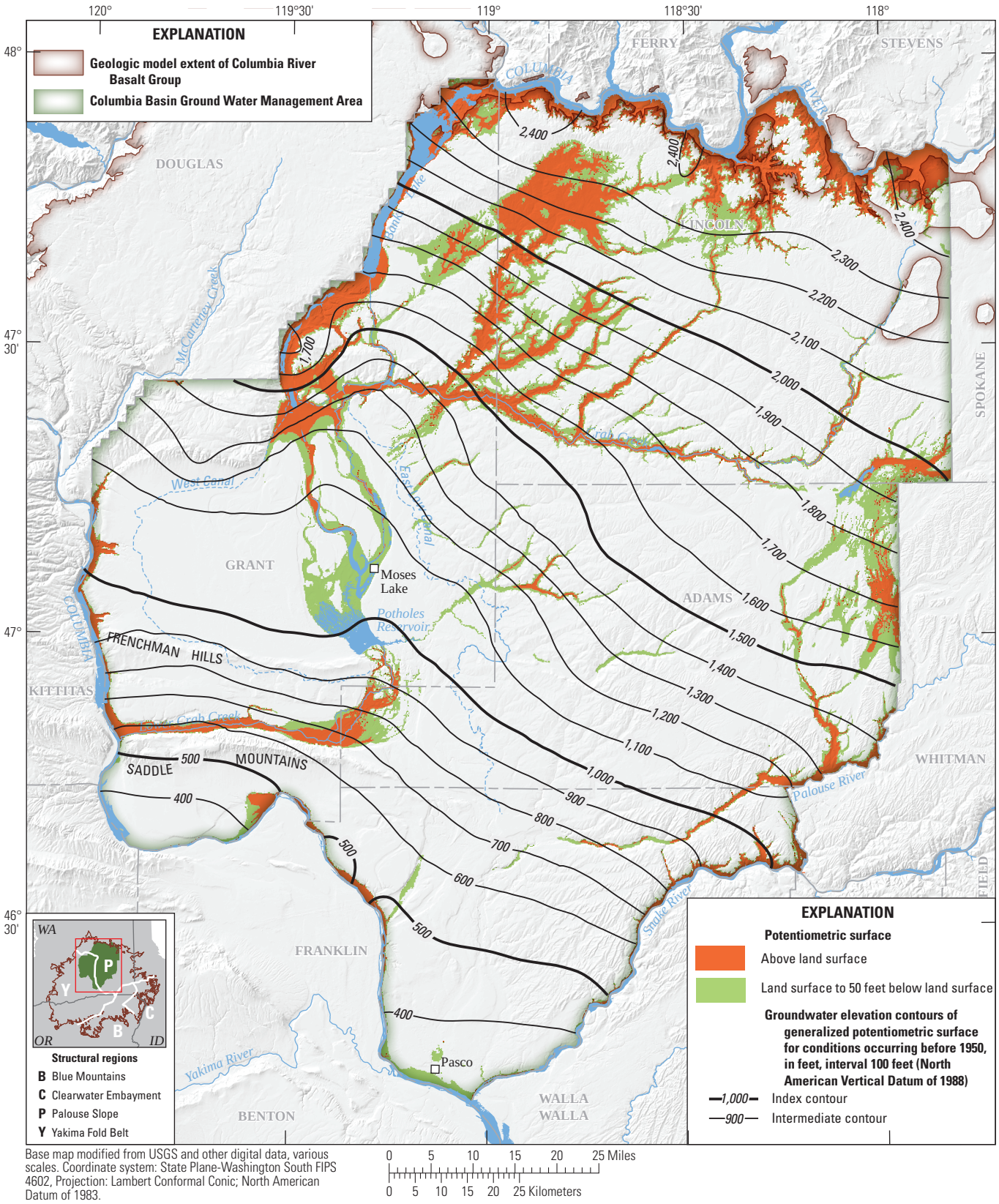

Figure 21. Generalized potentiometric surface for measured Columbia River Basalt Group aquifer conditions during the pre-development period in parts of the Palouse Slope/eastern Yakima Fold Belt and the Columbia Basin Ground Water Management Area, Washington. Areas where potentiometric surface is above or near land surface indicate greater potential for groundwater discharge to coulees prior to substantial groundwater declines.

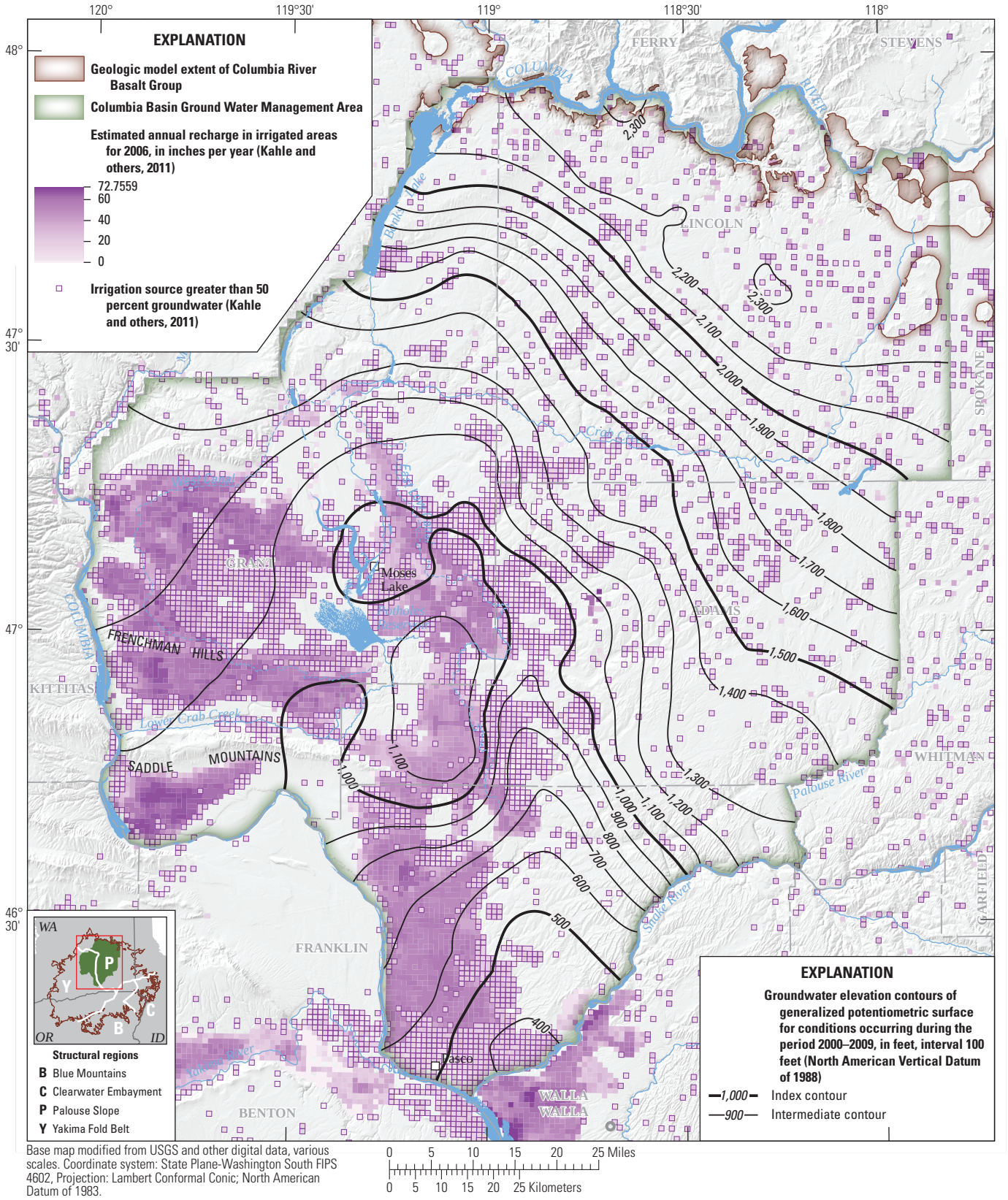

Figure 22. Generalized potentiometric surface for measured Columbia River Basalt Group aquifer conditions during 2000–2009 in parts of the Palouse Slope/eastern Yakima Fold Belt and the Columbia Basin Ground Water Management Area, Washington.

The central Palouse Slope shows a general lack of geologic structure or other evidence for strong horizontal flow barriers to the east, but the east-west trending faults associated with the ridges between the western valleys (the Frenchman Hills and the Saddle Mountains) in the eastern Yakima Fold Belt are likely barriers to flow. Luzier and Burt (1974) identified a "groundwater dam" on the Palouse Slope extending from the northwest to the southeast through the junction of Adams, Grant, and Lincoln Counties that is associated with an apparent change in hydraulic gradient (this feature is only partially represented because of the general nature of the smoothed potentiometric maps shown in figures 21 and 22). This steeper hydraulic gradient also was identified in this analysis at the boundary between group 9 (orange squares) and group 8 (brown squares) of the eastern well groups (figs. 15 and 17) and was present at least as early as 1940 prior to substantial water deliveries from the Columbia Basin Project, which began in the 1950s. One of the few locations with persistent bias in the residuals for the pre-development potentiometric surface was in the area where group 9 hydraulic heads were simulated as too high, indicating a local steepening of the hydraulic gradient to the east, and a flattening to the west. The flattening of water levels is evident in group 8 in 1968 (fig. 20*D*). As an alternative to the groundwater dam proposed by Luzier and Burt (1974), this steepened hydraulic gradient is hypothesized to result from a complex discharge boundary where the upper aquifers are intersected at land surface by incised canyons, which allows water to flow into the sediment-filled coulees. The potential for this outflow is indicated by the pre-development generalized potentiometric surface above or near the land surface in the coulees (fig. 21). Incision of the coulees into the Wanapum Basalt geologic unit (fig. 2) is sufficient that several lava flows and potentially several aquifers in the Wanapum Basalt may be intersected (Burns and others, 2011), possibly forming pathways for groundwater flow that would result in complex head patterns (not shown in figure 21) and apparent alterations in the regional hydraulic gradient. Most late-time (2000–2010) hydraulic heads are now below the elevation of the coulees, indicating that groundwater discharge to the coulees has declined over time. Two additional pieces of evidence support the hypothesis that groundwater historically discharged in this location. First, because shallow aquifers tend to drain into the coulees possibly dewatering parts of these aquifers, fewer wells are completed in the aquifers intersecting the coulees along a north-south swath in this area. Second, the apparently random highly variable heads about 300–400 ft above the Grande Ronde Basalt geologic model unit (approximate elevation of Wanapum Basalt intersected by the coulees) and flattening of the water levels below this stratigraphic elevation are characteristic of a highly variable flow field where groundwater is flowing to local drainage features (compare group 8 [brown squares] wells in figure 20*D* to hypothetical well groups in figure A2*B* and the associated discussion). The lowest land-surface elevation in the coulees where the potentiometric surface is above land surface is the controlling aquifer drainage elevation. This elevation is about 1,180 ft, which is the approximate inflection point of group 8 wells in 1968 (fig. 20*D*).

Summary and Conclusions

The Columbia Plateau Regional Aquifer System (CPRAS) covers an area of about 44,000 square miles in a structural and topographic basin within the drainage of the Columbia River in Washington, Oregon, and Idaho. The primary aquifers occur in basalts of the Columbia River Basalt Group (CRBG) and in places, overlying sediment. The system consists of a series of productive basalt aquifers within permeable interflow zones separated by less permeable flow interiors, overlaid locally by aquifers within sedimentary deposits. Groundwater levels have declined throughout much of the CPRAS since the 1970s.

Information was compiled from about 60,000 wells and 450,000 water-level measurements from wells in the CPRAS. Data are from an inventory of published and unpublished well data from many agencies. A subset of these data for the CRBG aquifer wells were used to develop a simple linear groundwater-level trend map for 1968–2009, which illustrates a persistent pattern of widespread groundwater-level declines. Overall declines from the analysis of data from 761 wells in the CRBG aquifers were measured in 72 percent of the wells. The mean of the trends was a decline of 1.9 feet per year (ft/yr). Rates of declines greater than 1.0 ft/yr were measured in 50 percent of wells, declines greater than 2.0 ft/yr in 38 percent of wells, declines greater than 4.0 ft/yr in 29 percent of wells, declines greater than 6.0 ft/yr in 9 percent of wells, and rates of decline greater than 8.0 ft/yr in 4 percent of wells.

The groundwater-level data also were used to identify groups of wells with similar hydraulic heads and temporal trends within limited subregions. Comparisons between adjacent well groups were used to define sets of well groups that delineate areas of overall similar groundwater-flow conditions. Discontinuities in hydraulic head between the sets of well groups were used to help infer the presence of barriers to groundwater flow. These barriers can include geologic features that influence the hydraulic properties of the aquifer, such as changes in lithology or the occurrence of folds and faults. In areas without flow barriers, dissimilarities in response of well groups over time result from the formation of irrigation-derived groundwater mounds or pumping induced regions of decline. The areas of focus for this analysis included the Umatilla area, Oregon, and the Palouse Slope/eastern Yakima Fold Belt (eYFB) in the Columbia Basin Ground Water Management Area (GWMA) consisting of Adams, Franklin, Grant, and Lincoln Counties, Washington.

In the Umatilla area, 286 wells were divided into groups with similar water levels and trends, and large hydraulic gradients between nearby groups defined barriers to groundwater flow. The barriers divide the groundwater-flow system in the Umatilla area into several leaky compartments that occur in vertical and horizontal directions. However, the degree of leakiness is highly variable. Significant findings for the Umatilla area include:

- Most CRBG aquifers are declining, except for a few shallow aquifers. Cumulative declines range from 100 to 300 feet since 1970.
- High horizontal hydraulic gradients and differences in temporal trends in water levels between adjacent well groups define horizontal flow barriers that generally correspond to mapped geologic structural features. Horizontal hydraulic gradients increase from north to south, which generally corresponds to an increase in structural complexity. This implies that recharge from the uplands into the heavily developed areas may be impeded.
- Significant vertical hydraulic gradients have been documented in a relatively small part of the Umatilla area, where the shallow aquifer system is distinct from the deep system. Since the 1970s, downward vertical gradients in these areas have been increasing as water-level declines have occurred in deeper wells due to pumping and commingling of these aquifers. Because the geology generally is conducive to creating vertical hydraulic gradients, the absence of vertical gradients over much of the area may be a consequence of flow through commingling wells resulting in the equilibration of the heads in the aquifers.

In the Palouse Slope of the central GWMA, the largest declining groundwater-level trends (1968–2009) follow a general north-south line through the middle of the GWMA. An analysis of 1,195 wells along major flow paths and through the area of persistent groundwater-level declines indicates that barriers to flow are not as evident in this area as near Umatilla, but well groups were still identifiable based on similar hydraulic heads and response to hydraulic stresses. This is consistent with the geologic interpretation of the Palouse Slope as being a gently folded structure created during subsidence when CRBG lavas were deposited in voluminous sheet flows. In this area, hydrographs of well groups were viewed along general flow paths that have developed as the result of irrigation stresses on the aquifer system.

Significant findings for the Palouse Slope/eYFB include:

- Groundwater levels in CRBG aquifers have risen since the 1950s in areas heavily irrigated with surface water and have declined since the 1970s in areas commonly irrigated with groundwater. For wells examined, typical rises in water level under surface-water irrigation areas are about 50 feet, with larger rises occurring locally (for example, in the fault bounded valleys to the south of the Frenchman Hills and the Saddle Mountains). Cumulative declines of 200 feet or greater are common in areas where pumping groundwater is the dominant source of irrigation water.
- Horizontal flow barriers are less apparent in this area than in the Umatilla area.
- Data indicate that significant vertical hydraulic gradients still exist, although much of the aquifer thickness is affected by commingling of wells.
- Prior to development, groundwater flow was from the uplands toward the Columbia and Snake Rivers. Late-time (2000–2010) flow patterns in the area are substantially altered by large-scale irrigation recharge and pumping patterns, and in some cases are reversed relative to pre-development conditions.
- The effect of commingling of water from multiple aquifers and its relative contribution to groundwater-level declines is not clear from these data; however, groundwater-flow modeling currently under development as part of the overall study may aid in quantifying these effects.
- The presence of a groundwater discharge boundary, where the upper aquifers are intersected at land surface by incised canyons and groundwater flows into the sediment-filled coulees, is an alternative to the hypothesis of a groundwater dam to explain local steepening of the hydraulic gradient along the Palouse Slope.

The use of stratigraphic coordinates to identify aquifers with similar water levels and trends worked well in the analysis of the groundwater conditions for the Umatilla area and Palouse Slope/eYFB. This suggests a way to advance the understanding of the geometry of local and regional aquifers by using the elevations of well bottoms for groups of wells with similar water levels and trends. This technique may be used to help identify the influence (or lack of influence) of structural features on groundwater flow or even to infer where previously unmapped structural features may exist. Trend surfaces representing aquifers and lava flow top elevations may be mapped in many areas across the Columbia Plateau, refining the current understanding of major geologic formations into smaller hydraulically important units.

Acknowledgments

The authors thank the many people who contributed their time and knowledge to help complete this study. The following organizations are noted for their special assistance with the collection of data: Columbia Basin Ground Water Management Area, Confederated Tribes of the Umatilla Indian Reservation, GSI Water Solutions, Inc., Oregon Water Resources Department, U.S. Department of Energy, Walla Walla Basin Watershed Council, and Washington State Department of Ecology. The following USGS employees are gratefully acknowledged for their contributions to the study: Danial Polette and Leonard Orzol assisted with analysis of the data; Fred Tillman developed and modified Excel® spreadsheet tools that greatly simplified the processing of the data; Sue Kahle and Marshall Gannett provided guidance and insights; and the many other USGS employees whose everyday efforts go to support this and many other studies.

Selected References

(**Bold** text indicates reference is cited in report.)

Bauer, H.H., and Hansen, A.J., 2000, Hydrology of the Columbia Plateau regional aquifer system, Washington, Oregon, and Idaho: U.S. Geological Survey Water-Resources Investigations Report 96-4106, 61 p. (Also available at http://pubs.er.usgs.gov/usgspubs/wri/wri964106.)

Burns, E.R., Morgan, D.S., Lee, K.K., Haynes, J.V., and Conlon, T.D., 2012, Evaluation of long-term water-level declines in basalt aquifers near Mosier, Oregon: U.S. Geological Survey Scientific Investigations Report 2012-5002, 134 p. (Also available at http://pubs.er.usgs.gov/publication/sir20125002.)

Burns, E.R., Morgan, D.S., Peavler, R.S., and Kahle, S.C., 2011, Three-dimensional model of the geologic framework for the Columbia Plateau Regional Aquifer System, Idaho, Oregon, and Washington: U.S. Geological Survey Scientific Investigations Report 2010-5246, 44 p. (Also available at http://pubs.er.usgs.gov/publication/sir20105246.)

Cleveland, W.S., Grosse, E., and Shyu, W.M., 1992, Local regression models, chap. 8 of Chambers, J.M., and Hastie, T.J., eds., Statistical models in S: Pacific Grove, Calif., Wadsworth and Brooks/Cole Advanced Books and Software, p. 309–376.

Drost, B.W., Whiteman, K.J., and Gonthier, J.B., 1990, Geologic framework of the Columbia Plateau Aquifer System, Washington, Oregon, and Idaho: U.S. Geological Survey Water-Resources Investigations Report 87-4238, 10 p., 10 sheets. (Also available at http://pubs.er.usgs.gov/usgspubs/wri/wri874238.)

Kahle, S.C., Morgan, D.S., Welch, W.B., Ely, D.M., Hinkle, S.R., Vaccaro, J.J., and Orzol, L.L., 2011, Hydrogeologic framework and hydrologic budget components of the Columbia Plateau Regional Aquifer System, Washington, Oregon, and Idaho: U.S. Geological Survey Scientific Investigations Report 2011-5124, 66 p. (Also available at http://pubs.er.usgs.gov/publication/sir20115124.)

Kahle, S.C., Olsen, T.D., and Morgan, D.S., 2009, Geologic setting and hydrogeologic units of the Columbia Plateau Regional Aquifer System, Washington, Oregon, and Idaho: U.S. Geological Survey Scientific Investigations Map 3088, 1 sheet. (Also available at http://pubs.er.usgs.gov/usgspubs/sim/sim3088.)

Keys, M.E., Vaccaro, J.J., Jones, M.A., and Julich, R.J., 2008, Hydrographs showing ground-water level trends for selected wells in the Yakima River basin aquifer system, Washington: U.S. Geological Survey Data Series 343. (Also available at http://pubs.er.usgs.gov/publication/ds343.)

Lindolm, G.F., and Vaccaro, J.J., 1988, Region 2, Columbia Lava Plateau, chap. 5 *of* Back, William, Rosenshein, J.S., and Seaber, P.R., eds., Hydrogeology: Boulder, Colo., Geological Society of America, The Geology of North America, v. O-2, p. 37–50, accessed June 27, 2012, at http://www.clemson.edu/ces/hydro/murdoch/Courses/Aquifer%20Systems/documents/Heath%20and%20Back%20books/Chapter%205.pdf.

Luzier, J.E., and Burt, R.J., 1974, Hydrology of basalt aquifers and depletion of ground water in east-central Washington: Washington State Department of Ecology, Water-Supply Bulletin 33, 53 p., accessed June 27, 2012, at http://www.ecy.wa.gov/programs/eap/wsb/wsb_All.html#p33.

Newcomb, R.C., 1959, Some preliminary notes on ground water in the Columbia River Basalt: Northwest Science, v. 33, no. 1, p. 1–18, accessed June 27, 2012, at http://www.vetmed.wsu.edu/org_NWS/NWSci%20journal%20articles/1950-1959/1959%20vol%2033/33-1/v33%20p1%20Newcomb.PDF.

Oregon Water Resources Department, 2012, Water protections and restrictions: Oregon Water Resources Department Web site, accessed July 11, 2012, at http://www.oregon.gov/OWRD/PUBS/aquabook_protections.aspx.

Porcello, J.J., Tolan, T.L., and Lindsey, K.A., 2009, Groundwater level declines in the Columbia River Basalt Group and their relationship to mechanisms for groundwater recharge—A conceptual groundwater system model, Columbia Basin Ground Water Management Area of Adams, Franklin, Grant, and Lincoln Counties: Othello, Wash., prepared by the Columbia Basin Ground Water Management Area of Adams, Franklin, Grant, and Lincoln Counties, June 2009, 175 p., accessed June 27, 2012, at http://www.cbgwma.org/pdf/GWMA_Groundwater%20Level%20Declines_%20TEXT_June%202009.pdf.

Reidel, S.P., Johnson, V.G., and Spane, F.A., 2002, Natural gas storage in basalt aquifers of the Columbia Basin, Pacific Northwest USA—A guide to site characterization: Pacific Northwest National Laboratory, Richland, Washington, 277 p., accessed June 27, 2012, at http://www.pnl.gov/main/publications/external/technical_reports/PNNL-13962.pdf.

Senay, G.B., Budde, Michael, Verdin, J.P., and Melesse, A.M., 2007, A coupled remote sensing and simplified surface energy balance approach to estimate actual evapotranspiration from irrigated fields: Sensors, v. 7, p. 979-1000, accessed September 27, 2012, at http://dx.doi.org/10.3390/s7060979.

Snyder, D.T., 2008, Estimated depth to ground water and configuration of the water table in the Portland, Oregon area: U.S. Geological Survey Scientific Investigations Report 2008-5059, 40 p. (Also available at http://pubs.er.usgs.gov/publication/sir20085059.)

Snyder, D.T., and Haynes, J.V., 2010, Groundwater conditions during 2009 and changes in groundwater levels from 1984 to 2009, Columbia Plateau Regional Aquifer System, Washington, Oregon, and Idaho: U.S. Geological Survey Scientific Investigations Report 2010-5040, 12 p. (Also available at http://pubs.er.usgs.gov/publication/sir20105040.)

Sokol, Daniel, 1963, Position and fluctuations of water level in wells perforated in more than one aquifer: Journal of Geophysical Research, v. 68, no. 4, p. 1079–1080, accessed June 27, 2012, at http://onlinelibrary.wiley.com/doi/10.1029/JZ068i004p01079/abstract.

Swanson, D.A., Wright, T.L., Hooper, P.R., and Bentley, R.D., 1979, Revisions in the stratigraphic nomenclature of the Columbia River Basalt Group: U.S. Geological Survey Bulletin 1457-G, 59 p. (Also available at http://pubs.er.usgs.gov/publication/b1457G.)

Taylor, C.J., and Alley, W.M., 2002, Ground-water-level monitoring and the importance of long-term water-level data: U.S. Geological Survey Circular 1217, 68 p. (Also available at http://pubs.er.usgs.gov/publication/cir1217.)

TIBCO Software, Inc., 1988–2008, Spotfire S+ 8.1 for Windows: Somerville, Mass., accessed August 28, 2012, at http://spotfire.tibco.com/products/s-plus/statistical-analysis-software.aspx.

Tillman, F.D., 2009, Excel® spreadsheet tools for analyzing groundwater level records and displaying information in ArcMap™: U.S. Geological Survey Techniques and Methods 4-F1, 59 p. (Also available at http://pubs.er.usgs.gov/publication/tm4F1.)

Tolan, T.L., Reidel, S.P., Beeson, M.H., Anderson, J.L., Fecht, K.R., and Swanson, D.A., 1989, Revisions to the estimates of the areal extent and volume of the Columbia River Basalt Group, *in* Reidel, S.P., and Hooper, P.R., eds., Volcanism and tectonism in the Columbia River flood-basalt province: Geological Society of America Special Paper 239, p. 1–20.

U.S. Census Bureau, 2000, Census 2000 gateway: U.S. Census Bureau database, accessed July 6, 2012, at http://www.census.gov/main/www/cen2000.html.

U.S. Geological Survey, 1999, National Elevation Dataset: U.S. Geological Survey Fact Sheet 148-99, 2 p. (Also available at http://erg.usgs.gov/isb/pubs/factsheets/fs14899.html.)

U.S. Geological Survey, 2008, Ground-Water availability assessment for the Columbia Plateau Regional Aquifer System, Washington, Oregon, and Idaho: U.S. Geological Survey Fact Sheet 2008-3086, 2 p. (Also available at http://pubs.er.usgs.gov/usgspubs/fs/fs20083086.)

U.S. Geological Survey, 2012, A three-dimensional hydrogeologic framework model of Columbia Plateau Regional Aquifer System: U.S. Geological Survey database, accessed July 2, 2012, at http://or.water.usgs.gov/proj/cpras/index.html.

Vaccaro, J.J., 1999, Summary of the Columbia Plateau Regional Aquifer-System analysis, Washington, Oregon, and Idaho: U.S. Geological Survey Professional Paper 1413-A, 51 p. (Also available at http://pubs.er.usgs.gov/usgspubs/pp/pp1413A.)

Vaccaro, J.J., Jones, M.A., Ely, D.M., Keys, M.E., Olsen, T.D., Welch, W.B., and Cox, S.E., 2009, Hydrogeologic framework of the Yakima River basin aquifer system, Washington: U.S. Geological Survey Scientific Investigations Report 2009-5152, 106 p. (Also available at http://pubs.er.usgs.gov/usgspubs/sir/sir20095152.)

Washington State Department of Ecology, 1988a, Columbia Basin Project–Ground Waters: Washington Administrative Code, Ecology Edition, Chap. 508-14 WAC, last updated June 9, 1988, 4 p., accessed June 27, 2012, at http://www.ecy.wa.gov/pubs/wac50814.pdf.

Washington State Department of Ecology, 1988b, Odessa ground water management subarea: Washington Administrative Code, Ecology Edition, Chap. 173-128A WAC, last updated June 9, 1988, 4 p., accessed June 27, 2012, at http://www.ecy.wa.gov/pubs/wac173128a.pdf.

Washington State Department of Ecology, 1988c, Quincy ground water management subarea and zones: Washington Administrative Code, Ecology Edition, Chap. 173-124 WAC, last updated June 9, 1988, 4 p., accessed June 27, 2012, at http://www.ecy.wa.gov/pubs/wac173124.pdf.

Whiteman, K.J., 1986, Ground-water levels in three basalt hydrologic units underlying the Columbia Plateau, Washington and Oregon, spring 1984: U.S. Geological Survey Water-Resources Investigations Report 86-4046, 4 sheets. (Also available at http://pubs.er.usgs.gov/usgspubs/wri/wri864046.)

Whiteman, K.J., Vaccaro, J.J., Gonthier, J.B., and Bauer, H.H., 1994, Hydrogeologic framework and geochemistry of the Columbia Plateau regional aquifer system: U.S. Geological Survey Professional Paper 1413-B, 73 p. (Also available at http://pubs.er.usgs.gov/usgspubs/pp/pp1413B.)

This page intentionally left blank.

Appendix A. Interpretation Guide for Graphs of Stratigraphic Position Compared with Hydraulic Head for Wells in the Columbia River Basalt Group, Washington, Oregon, and Idaho

After wells have been grouped into spatial clusters based on similar values of head and similar trends, the variability within each group may be examined to evaluate vertical hydraulic gradients. This is accomplished by plotting all available head data collected during a short period (relatively unaffected by temporal trends) as a function of the stratigraphic position of the aquifer being measured. If the vertical head gradients are large relative to the slope of the potentiometric surface within each aquifer, then the vertical gradient is apparent.

The assignment of hydraulic head values to a given stratigraphic position is fraught with complications that may affect the accuracy of any single data point. For Columbia River Basalt Group (CRBG) wells, it is assumed that the well terminates in a productive aquifer, and that the measured head in that well is representative of an aquifer at that stratigraphic position. Stratigraphic position is computed as the difference between the elevation of the bottom of the well and an estimate of the elevation of a geologic horizon that originally was flat. Use of stratigraphic position removes the influence of dipping, folding, and faulting when correlating strata that can act as laterally continuous aquifers. Conversely, in areas where CRBG units are discontinuous or exhibit significant thinning or thickening, stratigraphic position may have a spatial trend. As long as the group of wells being examined does not cover too large an area, spatial bias of stratigraphic position generally will be small. In addition to this complication, well commingling can result in hydraulic head measurements that are not representative of the aquifer at the well bottom (for example, well 1 in fig. 6).

Despite the potential complications, combinations of persistent patterns in stratigraphic position and hydraulic head may be interpreted hydrologically (fig. A1). The clustering of wells at distinct stratigraphic positions is evidence that distinct aquifers are locally important, and when hydraulic heads are distinctively different between aquifers, downward (fig. A1*A*) and upward (fig. A1*B*) vertical gradients exist. Similarly, there may be multiple distinct aquifers with no vertical gradient (fig. A1*C*). For the CRBG, significant vertical distance between two distinct aquifers implies the presence of a potential confining unit and the likelihood that a vertical hydraulic gradient should exist. However, aquifers may be hydraulically connected naturally through complex CRBG geometry, or they may be connected through commingling wells. If historical evidence supports a significant vertical gradient (fig. A1*A*–*B*), but recent measurements are consistently similar for each aquifer (fig. A1C), then commingling wells are the likely cause.

For many areas in the Columbia Plateau Regional Aquifer System (CPRAS), the repeating sequence of CRBG interflows and flow interiors results in a continuum of stratigraphic position (fig. A1*D*). In this case, there is either a single aquifer or many thin aquifers, and there can be downward, upward, or no significant vertical gradient present. For most areas within the CPRAS, vertical gradients are expected, so no vertical gradient over several hundred feet of stratigraphic position (fig. A1*D*) indicates that aquifers likely are hydraulically connected either naturally or through commingling wells.

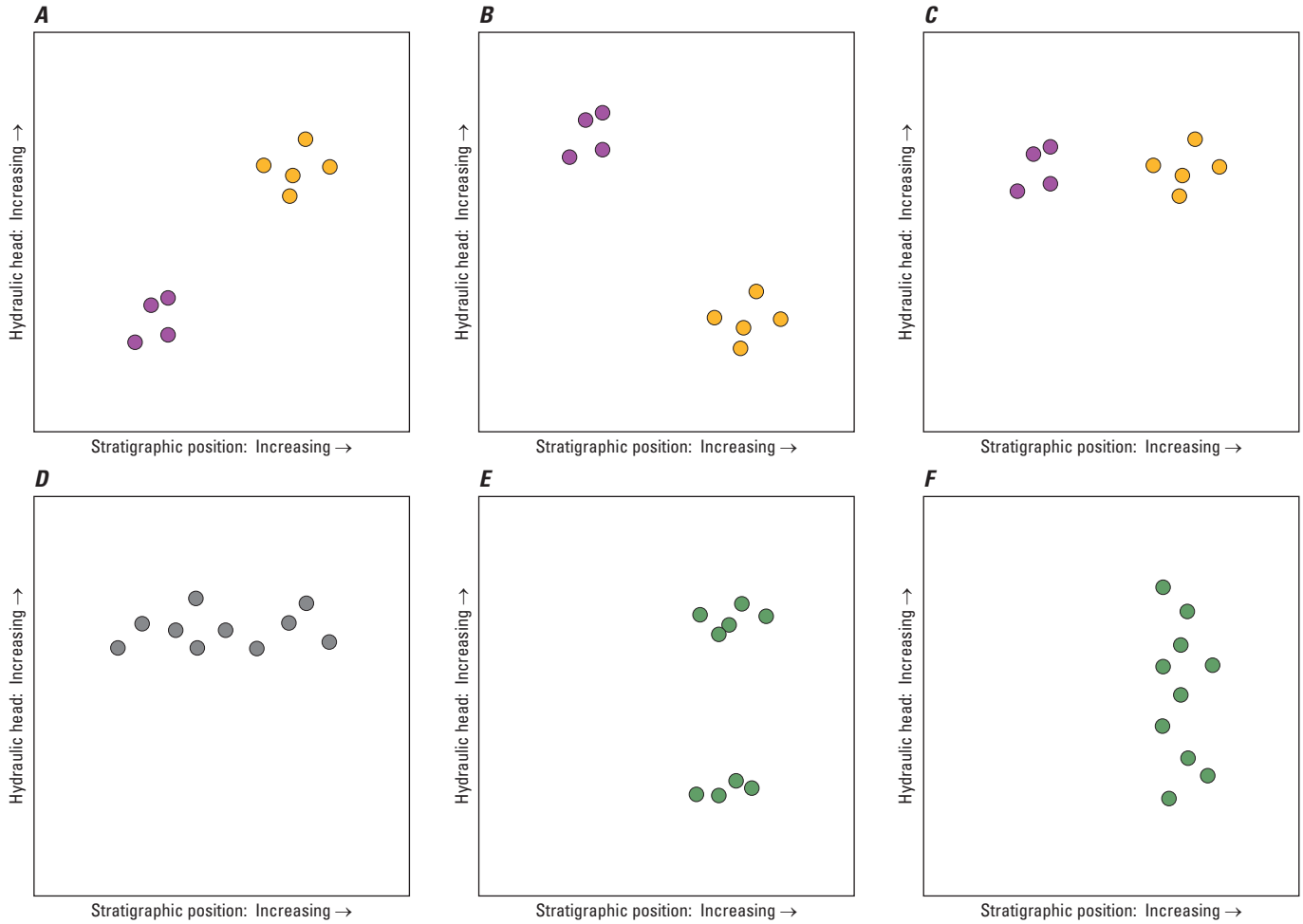

Figure A1. Expected patterns of hydraulic head as a function of stratigraphic position. (*A*) Two distinct aquifers with a significant downward hydraulic gradient; (*B*) two distinct aquifers with a significant upward gradient; (*C*) two distinct aquifers with no significant vertical gradient (*D*) a single thick aquifer or multiple thin aquifers with no significant vertical gradient; (*E*) a single aquifer with (apparently) two distinctly different hydraulic heads; and (*F*) a single aquifer with an apparent continuum of heads.

During the process of creating spatial clusters of wells, two distinctly different heads at the same stratigraphic position (fig. A1*E*) potentially signals the presence of a horizontal barrier to groundwater flow. If all higher head wells are in a separate location from the lower head wells, then some barrier to flow may exist, and the wells would be divided into separate groups. If the high and low head wells appear to be randomly mixed spatially, then well construction, pumping from adjacent wells, or geologic heterogeneity are the likely causes of the pattern (fig. 6). If a continuum of heads exist within a single aquifer (fig. A1*F*), then additional explanations may include a steep regional gradient of the potentiometric surface, or local perturbations to the potentiometric surface that may occur in the presence of groundwater discharge boundaries (such as incised canyons with springs and seeps). These local and regional effects may be separated by removing the regional trend from the potentiometric surface and examining the range of the residual heads.

Combinations of expected patterns of hydraulic head as a function of stratigraphic position (figs. A1*A*–*F*). are frequent in the real data for CRBG wells as illustrated in figures 12*A*–*F* and 20*A*–*I*. Over time, new deep wells have increasingly been required to case and seal to the aquifer, hydraulically isolating these wells from the upper commingled aquifers. Whereas the upper aquifers frequently have fairly uniform hydraulic heads, the deeper aquifers have a distinctly different head (compare fig. A2*A* to group 4 shallow and deep wells [black circles and white circles] shown in figure 20*B*–*C* and to group 11 shallow and deep wells [black squares and white squares] in fig. 20*E*). A continuum of heads associated with local groundwater drainage of upper aquifers may be combined with a uniform vertical gradient for deep aquifers (fig. A2*B*) to provide the observed pattern of group 8 wells (brown squares) during pre-development prior to lowering of the potentiometric surface below the land surface (fig. 20*D*).

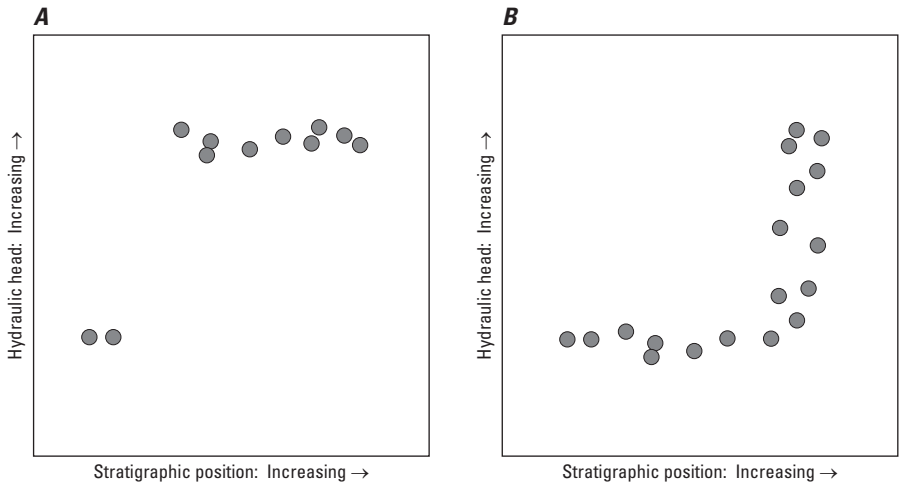

Figure A2. Combinations of expected patterns of hydraulic head as a function of stratigraphic position. (*A*) No vertical gradients exist for a thick part of the upper aquifer system (consisting of multiple aquifers), although a significant downward gradient exists in the lower aquifer system; (*B*) an apparent continuum of heads exists in the upper aquifers, and no vertical gradients exist in the lower aquifers.

This page intentionally left blank.

Publishing support provided by the U.S. Geological Survey
Publishing Network, Tacoma Publishing Service Center

For additional information contact:
Director, Oregon Water Science Center
U.S. Geological Survey
2130 SW 5th Avenue
Portland, Oregon 97201
http://or.water.usgs.gov

ZILLAH WELLHEAD PROTECTION PLAN

APPENDIX E

ZILLAH WELLHEAD PROTECTION PLAN

This appendix presents the Wellhead Protection Plan for the City of Zillah in compliance with the requirements of WAC 246-290-135.

WELLHEAD PROTECTION AREA (WHPA) DELINEATIONS

DEFINITION OF A WELLHEAD PROTECTION AREA

A wellhead protection area (WHPA) is defined as the surface and subsurface area surrounding a well that supplies a public water system through which contaminants are likely to pass and eventually reach the well (DOH, 1995). In Washington, WHPAs are based on time-of-travel criteria, or the theoretical distance a particle of water travels in a proscribed period of time. At a minimum, the DOH requires communities to look at the following five WHPAs:

- sanitary control area
- 6-month time-of-travel WHPA
- 1-year time-of-travel WHPA
- 5-year time-of-travel WHPA
- 10-year time-of-travel WHPA

A discussion of the WHPAs is provided in the following sections.

Sanitary Control Zone

The sanitary control area is the protective area around the wellhead as required by WAC 246-290-135. According to this statute, the minimum sanitary control area for wells is 100 feet, unless engineering justification supports a smaller area. Conversely, the DOH may require a larger sanitary control area if geological and hydrological data support such a decision.

Time-of-Travel WHPAs

The time-of-travel WHPAs are determined by estimating the travel distance of a hypothetical particle of water traveling through the aquifer to a pumping well for a selected travel time, (e.g., 1 year). The WHPAs define aquifer management regions around the well that can be used to identify and control potential sources of contamination. The management of WHPAs is often done incrementally with the most aggressive management strategies being applied in the 6-month and 1-year WHPAs.

Time-of-travel WHPAs are based on several assumptions. First, time-of-travel criteria do not consider vertical movement of water or contaminants from the land surface to the screened interval of the well. Therefore, time-of-travel zones tend to be inherently conservative. Also, it is assumed that contaminants move at the same rate as water in the subsurface, where actual contaminants may move slower or faster than water. This assumption is also typically conservative because the soil matrix, biological process, and chemical processes tend to retard the transport of contaminants in the subsurface.

Time-of-travel criteria may not be applicable in every situation. The DOH note that in some areas of the state, time-of-travel criteria may not be appropriate if the capture zone is recharged in less than 10 years, if complicated geographic features are present, or if a significant contribution to the well is from a nearby surface source. In these settings, alternate WHPA delineation criteria may be used with DOH approval. Because the City of Zillah's wells do not meet these conditions, time-of-travel criteria are appropriate. A discussion of the 6-month, 1-year, 5-year, and 10-year time-of-travel zones is provided in the following sections.

6-Month Time-of-Travel Zone

The six-month time-of-travel zone represents the surface area overlying the portion of aquifer supplying water to the well within a six-month period. Aggressive management strategies are recommended in the six-month time-of-travel zone because of the limited time a purveyor can respond to contamination in this zone. The six-month time-of-travel zone is vulnerable to both microbial and chemical contamination. EPA literature suggests that bacteria and viruses survive less than one year in groundwater, so potential sources of microbial contamination should be monitored carefully. Similarly, limited response times for mitigation actions following chemical contamination require aggressive control of potential sources of chemical contamination within this zone.

1-Year Time-of-Travel Zone

The one-year time-of-travel zone represents the surface area overlying the portion of aquifer supplying water to the well within a one-year period. As in the six month time-of-travel zone, the susceptibility of the one-year time-of-travel zone to both microbial and chemical contamination requires aggressive controls of potential contamination sources.

5-Year Time-of-Travel Zone

The five-year time-of-travel zone represents the surface area overlying the portion of aquifer supplying water to the well within a five-year period. Microbial contamination in the five-year time-of-travel zone is not a major concern, because existing literature suggests that bacteria and viruses cannot survive for more than one year in groundwater. However, chemical contamination is a concern and potential sources of chemical

contamination should be monitored closely. The primary difference between the five-year time-of-travel zone and the zones closer to the well is that the five-year zone provides an increased response time to mitigate the effects of chemical releases.

10-Year Time-of-Travel Zone

The ten-year time-of-travel zone represents the surface area overlying the portion of aquifer supplying water to the well within a ten-year period. The purpose of the ten-year zone is to control high risk chemical contamination sources, and to encourage long-term planning for contaminant risk reduction. Public education of contamination prevention measures is a key management tool used in protecting this zone.

WELLHEAD PROTECTION AREA DELINEATION METHODS

Several methods exist for delineating wellhead protection areas. These methods range in complexity and cost of implementation. Table E-1 summarizes the relative costs and complexity of the common delineation models.

Table E-1: Costs and Complexity of Common Delineation Methods

Delineation Method	Relative Cost	Relative Complexity
Calculated Fixed Radius Model	Low	Low
Analytical Model	High	Medium
Numerical Model	High	High

A discussion of the delineation methods evaluated for the purposes of this plan is presented in the following sections.

Calculated Fixed Radius Model (CFR)

The CFR model is a simple volumetric flow model used to calculate WHPAs based on time-of-travel criteria. This method involves drawing a circular boundary around a well for a specified time-of-travel (i.e., 1-year). This delineation method is a required element of DOH susceptibility assessments and is calculated by using the following equation:

$Qt = n\pi Hr^2$, where

Q = Pumping rate of the well in ft^3/year
n = Aquifer porosity (assumed to be 0.22 if no other information is available)
H = Screened or open interval of the well in feet
t = Time-of travel selected in years (i.e., 1-Year, 5-Years, etc.)
r = CFR radius of the WHPA in feet

This equation is solved for the radius of the WHPA, which defines a circular time-of-travel zone around the well extended vertically through the aquifer. The CFR denotes a cylinder with a soil matrix pore volume equal to the volume of water pumped during the selected time of travel.

Analytical Model

Analytical models make use of established groundwater flow equations to provide a more accurate delineation of WHPAs. Dozens of equations have been developed for differing hydrogeologic settings and conditions, most of which are based on time-of-travel criteria. Analytical models require more information about hydrogeological conditions than the CFR method, but tend to be more accurate. WHPAs delineated with analytical models tend to be elongated in shape with the majority of the WHPA lying upgradient of the well in the direction of groundwater flow.

Numerical Model

Numerical models are generally accepted as the superior method for the delineation of WHPAs. Numerical models require a significant amount of field information and is based on the formation of a grid that simulates the aquifer in question. At each node in the grid, data on water surface elevation, hydraulic conductivity, and aquifer thickness are input. These data are the input for a matrix of equations that simulate the behavior of the aquifer under varying pumping conditions. These models can be either two-dimensional or three-dimensional and are typically used when complex geologic features are present.

DETERMINATION OF WHPA DELINEATION METHOD

Following a review of the WHPA delineation methods discussed in the previous sections, it was determined that the CFR method is the simplest, most conservative, and generally the most appropriate wellhead delineation method for the City of Zillah at this time. The City will continue to evaluate the adequacy of its WHPAs during its biennial updates and will determine if a more rigorous delineation method is appropriate in the future.

Source Delineations

A summary of the WHPA radii and areas for each of the sources is provided in Table E-2. Because Well No. 2 and Well No. 3 are emergency wells, the City is not required to include them in wellhead protection planning. However, in preparation of future use of these wells, the City has delineated the WHPAs for Well No. 2 and No. 3.

Table E-2: City of Zillah WHPA Characteristics

Source	CFR (in feet)				Area (in acreage)
	6-Month	1-Year	5-Year	10-Year	10-Year
Well No. 1	800	980	2,550	3,590	930
Well No. 2	140	200	440	620	30
Well No. 3	140	200	440	620	30

INVENTORY OF POTENTIAL SOURCES OF CONTAMINATION

After delineating the wellhead protection areas (WHPAs) associated with the three wells located in the City of Zillah, an inventory of existing and potential sources of groundwater contamination was compiled and mapped. Inventorying potential sources of groundwater contamination provides a comprehensive source of information about risks from potential sources of contamination.

DATA COLLECTION METHODOLOGY

In order to facilitate the update of this plan according to the biennial schedule outlined in WAC 246-290-135, existing databases of potential contamination sources were explored. The databases were augmented with a site specific inventory for the City of Zillah WHPAs based on a survey of high risk businesses. The following sections provide a discussion of the available data used to form the potential contamination source inventory and maps of the locations of these sources within the Zillah WHPAs.

Available Data and Databases

The DOE maintains an active hazardous materials management program that manages hazardous materials in the entire State and stores data related to hazardous materials spills, transport, storage and cleanup. The following DOE databases are available:

- Businesses which handle substances that require a material safety data sheet (MSDS)
- Businesses that treat, transport, store, or dispose of hazardous wastes
- Businesses that own and operate underground storage tanks (USTs)
- Sites occupied by leaking underground storage tanks (LUSTs)
- Confirmed or suspected sites of contamination
- Solid waste facilities or landfills

High Risk Businesses

In addition to the available DOE databases of potential contamination sources, a search of high risk businesses was performed based on EPA literature. Table E-3 summarizes types of businesses that may be a risk in WHPAs along with corresponding contaminant types.

Table E-3: Potential Sources of Groundwater Contamination (EPA/625/R-93/002)

Source	Contaminants
Naturally Occurring Sources	
Rocks and soils	*Aesthetic Contaminants*: Iron and iron bacteria; manganese; calcium and magnesium (hardness) *Health and Environmental Contaminants:* Arsenic; asbestos; metals; chlorides; fluorides; sulfates; and microorganisms
Contaminated water	Excessive sodium; bacteria; viruses; low pH (acid) water
Decaying organic matter	Bacteria
Geological radioactive gas	Radionuclides (radon, etc.)
Natural hydrogeological events and formations	Salt-water/brackish water intrusion (or intrusion of other poor quality water); contamination through sink-hole infiltration in limestone terrains
Agricultural Sources	
Animal feedlots and burial areas	Livestock sewage wastes; nitrates; phosphates; chloride; chemical sprays and dips for controlling insect, bacterial, viral, and fungal pests on livestock; coliform [4] and non-coliform bacteria; viruses
Manure spreading areas and storage pits	Livestock sewage wastes; nitrates
Livestock waste disposal areas	Livestock sewage wastes; nitrates
Crop areas and irrigation sites	Pesticides [5], fertilizers [6], gasoline, motor oils from chemical applicators
Chemical storage areas and containers	Pesticides [5]; fertilizers [6]; residues
Farm machinery areas	Automotive wastes [7]; welding wastes
Agricultural drainage wells and canals	Pesticides [5], fertilizers [6]; bacteria; salt water (in areas where the fresh-saltwater interfaces lies at shallow depth and where the water table is lowered by channelization, pumping, or other causes)
Residential Sources	
Common household maintenance and hobbies	*Common Household Products.* [8] Household cleaners; oven cleaners; drain cleaners; toilet cleaners; disinfectants; metal polishes; jewelry cleaners; shoe polishes; synthetic detergents; bleach; laundry soil and stain removers; spot removers and dry cleaning fluid; solvents; lye or caustic soda; household pesticides [9], photochemicals; printing ink; other common products *Wall and Furniture Treatments:* Paints; varnishes; stains; dyes; wood preservatives (creosote); paint and lacquer thinners; paint and varnish removers and deglossers; paint brush cleaners; floor and furniture strippers *Mechanical Repair and Other Maintenance Products:* Automotive wastes [9]; waste oils; diesel fuel; kerosene; #2 heating oil; grease; degreasers for garages; metal degreasers; asphalt/roofing tar; tar removers; lubricants; rustproofers; car wash detergents; car waxes/polishes; rock salt; refrigerants
Lawns and gardens	Fertilizers [5]; herbicides and other pesticides used for lawn and garden maintenance [10]
Swimming pools	Swimming pool maintenance chemicals [11]
Septic systems, cesspools, and sewer lines	Septage; coliform and non-coliform bacteria [4]; viruses; nitrates; heavy metals; synthetic detergents; cooking and motor oils; bleach; pesticides [9] [10], paints; paint thinner; photographic chemicals; swimming pool chemicals [11]; septic tank/cesspool cleaner chemicals [12]; elevated levels of chloride, sulfate, calcium, magnesium, potassium, and phosphate
Underground storage tanks	Home heating oil
Apartments and condominiums	Swimming pool chemicals [11]; pesticides for lawn and garden maintenance and cockroach, termite, ant, rodent, and other pest control [9], [10]; wastes from onsite sewage treatment plants; household hazardous wastes [8]

Table E-3: Potential Sources of Groundwater Contamination (continued)

Source	Contaminants
Municipal Sources	
Schools and government offices and grounds	Solvents; pesticides [9], [10]; acids; alkalis; waste oils; machinery/vehicle servicing wastes; gasoline and oil from storage tanks; building wastes [13]
Park lands	Fertilizers [6]; herbicides [10]; insecticides [9]
Public and residential areas infested with mosquitoes, gypsy moths, ticks, ants, or other pests	Pesticides [5], [9]
Highways, road maintenance depots, and deicing operations	Herbicides in highway rights-of-way [5],[10]; road salt (sodium and calcium chloride); road salt anti-caking additives (ferric ferrocyanide, sodium ferrocyanide); road salt anti-corrosives (phosphate and chromate); automotive wastes [7]
Municipal sewage treatment plans and sewer lines	Municipal wastewater; sludge; [14] treatment chemicals [15]
Storage, treatment, and disposal ponds, lagoons, and other surface impoundments	sewage wastewater; nitrates; other liquid wastes; microbiological contaminants
Land areas applied with wastewater or wastewater byproducts	Organic matter; nitrate; inorganic salts; heavy metals; coliform and non-coliform bacteria [4]; viruses; nitrates; sludge [14]; non-hazardous wastes [16]
Storm water drains and basins	Urban runoff; gasoline; oil; other petroleum products; road salt; microbiological contaminants
Combined sewer overflows (municipal sewers and storm water drains)	Municipal wastewater; sludge [14]; treatment chemicals [15]; urban runoff; gasoline; oil; other petroleum products; road salt; microbial contaminants
Recycling/reduction facilities	residential and commercial solid waste residues
Municipal waste landfills	Leachate; organic and inorganic chemical contaminants; waste from households [8] and businesses [13]; nitrates; oils; metals
Open dumping and burning sites, closed dumps	Organic and inorganic chemicals; metals; oils; wastes from households[8] and businesses [13]
Municipal incinerators	Heavy metals; hydrocarbons; formaldehyde; methane; ethane; ethylene; acetylene; sulfur and nitrogen compounds
Water supply wells, monitoring wells, older wells, domestic and livestock wells, unsealed and abandoned wells, and test hole wells	Surface runoff; effluents from barnyards, feedlots, septic tanks, or cesspools; gasoline; used motor oil; road salt
Sumps and dry wells	Storm water runoff; spilled liquids; used oil; antifreeze; gasoline; other petroleum products; road salt; pesticides;[5] and a wide variety of other substances
Drainage wells	Pesticides [9], [10]; bacteria
Well pumping that causes interaquifer leakage, induced filtration, landward migration of sea water in coastal areas; etc.	Saltwater; excessively mineralized water
Artificial groundwater	Stormwater runoff; excess irrigation water; stream flow; cooling water; treated sewage effluent; other substances that may contain contaminants, such as nitrates, metals, detergents, synthetic organic compounds, bacteria, and viruses

Table E-3: Potential Sources of Groundwater Contamination (continued)

Source	Contaminants
Commercial Sources	
Airports, abandoned airfields	Jet fuels; deicers; diesel fuel; chlorinated solvents; automotive wastes [7]; heating oil; building wastes [13]
Auto repair shops	Waste oils; solvents; acids; paints; automotive wastes [7]; cutting oils
Barber and beauty shops	Perm solutions; dyes; miscellaneous chemicals contained in hair rinses
Boat yards and marinas	Diesel fuels; oil; septage from boat waste disposal areas; wood preservative and treatment chemicals; paints; waxes; varnishes; automotive wastes [7]
Bowling alleys	Epoxy; urethane-based floor finish
Car dealerships	Automotive wastes [7], waste oils; solvents; miscellaneous wastes
Car washes	Soaps; detergents; waxes; miscellaneous chemicals
Campgrounds	Septage; gasoline; diesel fuel from boats; pesticides for controlling pests [5], [9], household hazardous wastes from recreational vehicles (RVs) [8]
Carpet stores	glues and other adhesives; fuel from storage tanks if forklifts are used
Cemeteries	Leachate; lawn and garden maintenance chemicals [10]
Construction trade areas and materials	Solvents; asbestos; paints; glues and other adhesives; waste insulation; lacquers; tars; sealants; epoxy waste; miscellaneous chemical wastes
Country clubs	Fertilizers [6]; herbicides [5],[10], pesticides for controlling pests [9]; swimming pool chemicals [11]; automotive wastes
Dry cleaners	Solvents (perchloroethylene, petroleum solvents, Freon); spotting chemicals (trichloroethane, methylchloroform, ammonia, peroxides, rust removers, etc.)
Funeral services and crematories	Formaldehyde; wetting agents; fumigants; solvents
Furniture repair/finishing shops	Paints; solvents; degreasing and solvent recovery sludges
Gasoline services stations	Oils; solvents; miscellaneous wastes
Golf courses	Fertilizers [6]; herbicides [5], [10] pesticides for controlling pests [9]
Hardware/lumber/parts stores	Hazardous chemical products in inventories; heating oil and fork lift fuel from storage tanks; wood-staining and treating products such as creosote
Heating oil companies, USTs	Heating oil; wastes from truck maintenance areas [7]
Horticultural practices, garden nurseries, florists	Herbicides, insecticides, fungicides, and other pesticides [10]
Jewelry/metal plating shops	Sodium and hydrogen cyanide; metallic salts; hydrochloric acid; sulfuric acid;
Laundromats	Detergents; bleaches; fabric dyes
Medical institutions	X-ray developers [17]; infectious, radiological, and biological wastes; disinfectants; asbestos; beryllium; dental acids; miscellaneous chemicals
Office buildings	Building wastes [13]; lawn/garden maintenance chemicals [10]; gasoline; oil
Paint stores	Paints; paint thinners; lacquers; varnishes; other wood treatments
Pharmacies	Spilled and returned products
Photography shops, photo labs	Biosludges; silver sludges; cyanides; miscellaneous sludges
Print shops	Solvents; inks; dyes; oils; photographic chemicals
Railroad tracks and yards	Diesel fuel; herbicides for rights-of-way; creosote for preserving wood ties
Research laboratories	X-ray developers [17]; infectious, radiological, and biological wastes; drugs; asbestos; disinfectants; beryllium; solvents; infectious materials; disinfectants
Scrap and junk yards	Any wastes from businesses [13] and households [8]; oils
Sports and hobby shops	Gunpowder and ammunition; rocket engine fuel; model airplane glue
Above and underground tanks	Heating oil; diesel fuel; gasoline; petroleum products; commercial chemicals
Transportation services for passenger transit	Waste oil; solvents; gasoline and diesel fuel from vehicles and storage tanks; fuel oil; other automotive wastes [7]
Veterinary services	Solvents; infectious materials; vaccines; drugs; disinfectants (quaternary ammonia, peroxides, bleach); x-ray developers and fixers [17]

Table E-3: Potential Sources of Groundwater Contamination (continued)

Source	Contaminants
Industrial Sources (Presently Operated or Torn Down Facilities) [18]	
Asphalt plants	Petroleum derivatives
Communications equipment manufacturers	Nitric, hydrochloric, and sulfuric acid wastes; heavy metal sludges; copper-contaminated etchant (e.g., ammonium persulfate); cutting oil and degreasing solvent (trichloroethane, Freon, or trichloroethylene); waste oils; corrosive soldering flux; paint sludge; waste plating solution
Electric and electronic equipment manufacturers and storage facilities	Cyanides; metal sludges; caustics (chromic acid); solvents; oils; alkalis; acids; paints and paint sludges; calcium fluoride sludges; methylene chloride; perchloroethylene; trichloroethane; acetone; methanol; toluene; PCBs
Electroplaters	Boric, hydrochloric, hydrofluoric, and sulfuric acids; sodium and potassium hydroxide; chromic acid; sodium and hydrogen cyanide; metallic salts
Foundries and metal fabricators	Paint wastes; acids; heavy metals; metal sludges; plating wastes; oils; solvents; explosive wastes
Furniture/fixtures manufacturers	Paints; solvents; degreasing sludges; solvent recovery sludges
Machine and metalworking shops	Solvents; metals; miscellaneous organics; sludges; oily metal shavings; lubricant and cutting oils; degreasers (tetrachlorethylene); metal marking fluids; mold-release agents
Mining operations, underground storage mines	Mine spoils or tailings that often contain metals; acids; highly corrosive mineralized waters; metal sulfides
Unsealed abandoned mines used as waste pits	Metals, acids; minerals; sulfides; other hazardous and nonhazardous chemicals [16]
Paper mills	Metals; acids; minerals; sulfides; other hazardous and nonhazardous chemicals [16], organic sludges; sodium hydroxide; chlorine; hypochlorite; chlorine dioxide; hydrogen peroxide
Petroleum production and storage companies, secondary recovery of petroleum	Hydrocarbons; oil-field brines (highly mineralized salt solutions)
Industrial pipelines	Corrosive fluids; hydrocarbons; other hazardous and nonhazardous material and wastes [16]
Photo processing laboratories	Cyanides; ;Biosludges; silver sludges; miscellaneous sludges
Plastics materials and synthetics producers	Solvents; oils; miscellaneous organics and inorganics (phenols, resins); paint wastes; cyanides; acids; alkalis; wastewater treatment sludges; cellulose esters; surfactant; glycols; phenols; formaldehyde; peroxides; etc.
Primary metal industries (blast furnaces, steel works, rolling mills)	Heavy metal wastewater treatment sludge; pickling liquor; waste oil; acid tar sludge; alkaline cleaners; degreasing solvents; slag; metal dust
Publishers, printers, and allied industries	Solvents; inks; dyes; oils; miscellaneous organics; photographic chemicals
Public utilities (phone, electric power, gas)	PCBs from transformers and capacitors; oils; solvents; sludges; acid solution; metal plating solutions (chromium, nickel, cadmium); herbicides from utility rights-of-way
Public utilities (phone, electric power, gas)	PCBs from transformers and capacitors; oils; solvents; sludges; acid solution; metal plating solutions (chromium, nickel, cadmium); herbicides from utility rights-of-way
Sawmills and planers	Treated wood residue (copper quinolate, mercury, sodium bazide); tanner gas; paint sludges; solvents; creosote; coating and gluing wastes
Stone, clay, and glass manufacturers	Solvents; oils and grease; alkalis; acetic wastes; asbestos; heavy metal sludges; phenolic solids or sludges; metal finishing sludge
Welders	Oxygen, acetylene
Wood preserving facilities	wood preservatives; creosote

Table E-3: Potential Sources of Groundwater Contamination (continued)

Source	Contaminants
Industrial Sources	
Material stockpiles	Acid drainage; other hazardous and nonhazardous wastes [16]
Waste tailing ponds (commonly for the disposal of mining wastes)	Acids; metals; dissolved solids; radioactive ores; other hazardous and nonhazardous wastes [15]
Transport and transfer stations (trucking terminals and rail yards)	Fuel tanks; repair shop wastes [7], other hazardous and nonhazardous wastes [15]
Above-ground and underground storage tanks and containers	Heating oil; diesel and gasoline fuel; other petroleum products; hazardous and nonhazardous materials and wastes [16]
Storage, treatment, and disposal ponds, lagoons, and other surface impoundments	Hazardous and nonhazardous liquid wastes [16]; septage; sludge [14]
Chemical landfills	Leachate; hazardous and nonhazardous wastes [16]; nitrates
Radioactive waste disposal sites	Radioactive wastes from medical facilities, power plants, and defense operations; radionuclides (uranium, plutonium)
Unattended wet and dry excavation sites (unregulated dumps)	A wide range of substances; solid and liquid wastes; oil-field brines; spent acids form steel mill operations; snow removal piles containing large amounts of salt
Operating and abandoned production and exploratory wells (for gas, oil, coal, geothermal, and heat recovery); test hole wells; monitoring and excavation wells	Metals; acids; minerals; sulfides; other hazardous and nonhazardous chemicals [16]
Dry wells	Saline water from wells pumped to keep them dry
Injection wells	Highly toxic wastes; hazardous and nonhazardous industrial wastes [16]; oil-field brines
Well drilling operations	Brines associates with oil and gas operations

[1] In general, groundwater contamination stems from the *misuse and improper disposal* of liquid and solid wastes; the *illegal dumping or abandonment* of household, commercial, or industrial chemicals; the *accidental spilling* of chemicals from trucks, railways, aircraft, handling facilities, and storage tanks; or the *improper siting, design, construction; operation, or maintenance* of agricultural, residential, municipal, commercial, and industrial drinking water wells and liquid and solid waste disposal facilities. Contaminants also can stem from *atmospheric pollutants,* such as airborne sulfur and nitrogen compounds, which are created by smoke, flue dust, aerosols, and automobile emissions, fall as acid rain, and percolate through the soil. When the sources listed in t his table are used and managed properly, groundwater contamination is not likely to occur.

[2] Contaminants can reach groundwater from activities occurring on the land surface, such as industrial waste storage; from sources below the land surface but above the water table, such as septic systems; from structures beneath the water table, such as wells; or from contaminated recharge water.

[3] This table lists the most common wastes, but not all potential wastes. For example, it is not possible to list all potential contaminants contained in storm water runoff or research laboratory wastes.

[4] Coliform bacteria can indicate the presence of pathogenic (disease-causing) microorganisms that may be transmitted in human feces. Diseases such as typhoid fever, hepatitis, diarrhea, and dysentery can result from sewage contamination of water supplies.

[5] Pesticides include herbicides, insecticides, rodenticides, fungicides, and avicides. EPA has registered approximately 50,000 different pesticide products for use in the United States. Many are highly toxic and quite mobile in the subsurface. An EPA survey found that the most common pesticides found in drinking water wells were DCPA (iacthal) and atrazine, which EPA classifies as *moderately toxic* (Class 3) and *slightly toxic* (Class 4) materials, respectively.

[6] The EPA National Pesticides Survey found that the use of fertilizers correlates to nitrate contamination of groundwater supplies.

[7] Automotive wastes can include gasoline; antifreeze; automatic transmission fluid; battery acid; engine and radiator flushes; engine and metal degreasers; hydraulic (brake) fluid; and motor oils.

[8] Toxic or hazardous components of common household products re noted in Table 3-2.

[9] Common household pesticides for controlling pests such as ants, termites, bees, wasps, flies, cockroaches, silverfish, mites, ticks, fleas, worms, rats, and mice can contain active ingredients including napthalene, phosphorus, xylene, chloroform, heavy metals, chlorinated hydrocarbons, arsenic, strychnine, kerosene, nitrosamines, and dioxin.

[10] Common pesticides used for lawn and garden maintenance (i.e., weed killers, and mite, grub, and aphid controls) include such chemicals as 2.4-D; chlorphyrifos; diazinon; benomyl; captan; dicofol; and methoxychlor.

[11] Swimming pool chemicals can contain free and combined chlorine; bromine; iodine; mercury-based, copper-based, and quaternary algicides; cyanuric acid; calcium or sodium hypochlorite; muriatic acid; sodium carbonate.

[12] Septic tank/cesspool cleaners include synthetic organic chemicals such a 1,1,1 trichloroethane, tetrachloroethylene, carbon tetrachloride, and methylene chloride.

[13] Common wastes from public and commercial buildings include automotive wastes; rock salt; and residues from cleaning products that may contain chemicals such as xylenols, glycol esters, isopropanol, 1,1,1 trichloroethane, sulfonates, chlorinated phenolys, and cresols.

[14] Municipal wastewater treatment sludge can contain organic matter; nitrates; inorganic salts; heavy metals; coliform and noncoliform bacteria; and viruses.

[15] Municipal wastewater treatment chemicals include calcium oxide; alum; activated alum, carbon, and silica; polymers; ion exchange resins; sodium hydroxide; chlorine; ozone; and corrosion inhibitors.

[16] The Resource Conservation and Recovery Act (RCRA) defines a hazardous waste as a solid waste that may cause an increase in mortality or serious illness or pose a substantial threat to human health and the environment when improperly treated, stored, transported, disposed of, or otherwise managed. A waste is hazardous if it exhibits characteristics of ignitability, corrosivity, reactivity, and/or toxicity. Not covered by RCRA regulations are domestic sewage; irrigation waters or industrial discharges allowed by the Clean Water Act; certain nuclear and mining wastes; household wastes; agricultural wastes (excluding some pesticides); and small quantity hazardous wastes (i.e. less than 220 pounds per month) generated by businesses.

[17] X-ray developers and fixers may contain reclaimable silver, glutaldehyde, hydroquinone, phenedone, potassium bromide, sodium sulfite, sodium carbonate, thiosulfates, and potassium alum.

[18] This table lists potential groundwater contaminants from many common industries, but it does not address all industries.

Susceptibility Assessment Inventory

The City completed required DOH Susceptibility Assessments in 1994; these assessments are included at the end of this appendix. Part of the assessments required the identification of preliminary inventory items for inclusion in a WHPP. Several of these inventory items have already been discussed as part of the available DOE databases, including USTs, LUSTs, and landfills. Additional inventory items include septic tanks, private wells (both active and abandoned), wastewater treatment lagoons, stormwater injection wells and collection basins, areas of high population (greater than 1 house per acre), pesticide application areas

WELLHEAD CONTAMINANT INVENTORY

Following a preliminary review of the available databases and susceptibility assessments, a wellhead contaminant inventory was identified. Table E-4 summarizes the City of Zillah contaminant inventory and Figure E-1 shows the locations of these inventory items.

Table E-4: Zillah Well Contaminant Inventory

Site	Contaminant Source	Address	I.D. #	Description
1	Bleyhl Farm Service	1404 1st Avenue	WAD085248540	Hazardous Waste
2	George F. Joseph Orchard Siding Inc.	1511 Cutler Way	CRK000041350	Ammonia, Methyl Bromide
3	Sprint Communications	702 South 2nd	CRK000031090	Sulfuric Acid
4	Covey Run Vitners	1500 Vintage Road	83331756	Winery
5	El Ranchito Inc	1319 First Avenue	43959263	Hazardous Waste
6	USWCOM Zillah	Highway 410	43194642	Hazardous Waste
7	Zillah Police Dept.	111 7th Street	37732766	Hazardous Waste
8	Zillah School District	1602 2nd Avenue	47759183	Hazardous Waste
9	Zillah STP	740 Railroad Ave.	56545852	Sewage System
10	Mt. Arbor Nurseries	507 1st Avenue	101762	LUST
11	G. Hilton Elementary	4th St. & Dean Ave.	200542	LUST
12	Circle L Minimart	1st Ave. & 8th St.	1637	UST
13	El Ranchito Restaurant	1316 E. 1st Ave.	102120	UST
14	Zillah School District	205 2nd Avenue	101556	UST
15	Zillah Texaco	808 1st Avenue	1337	UST

Following a review of the inventory items identified in this wellhead protection program, the susceptibility of the City's wells to contamination is termed low. A more rigorous investigation of inventory items and their associated risk will be completed in the City's 1999 WHPP.

CITY OF ZILLAH
WATER SYSTEM PLAN
FIGURE E-1
WHPA INVENTORY

Gray & Osborne, Inc.
CONSULTING ENGINEERS
SEATTLE - YAKIMA

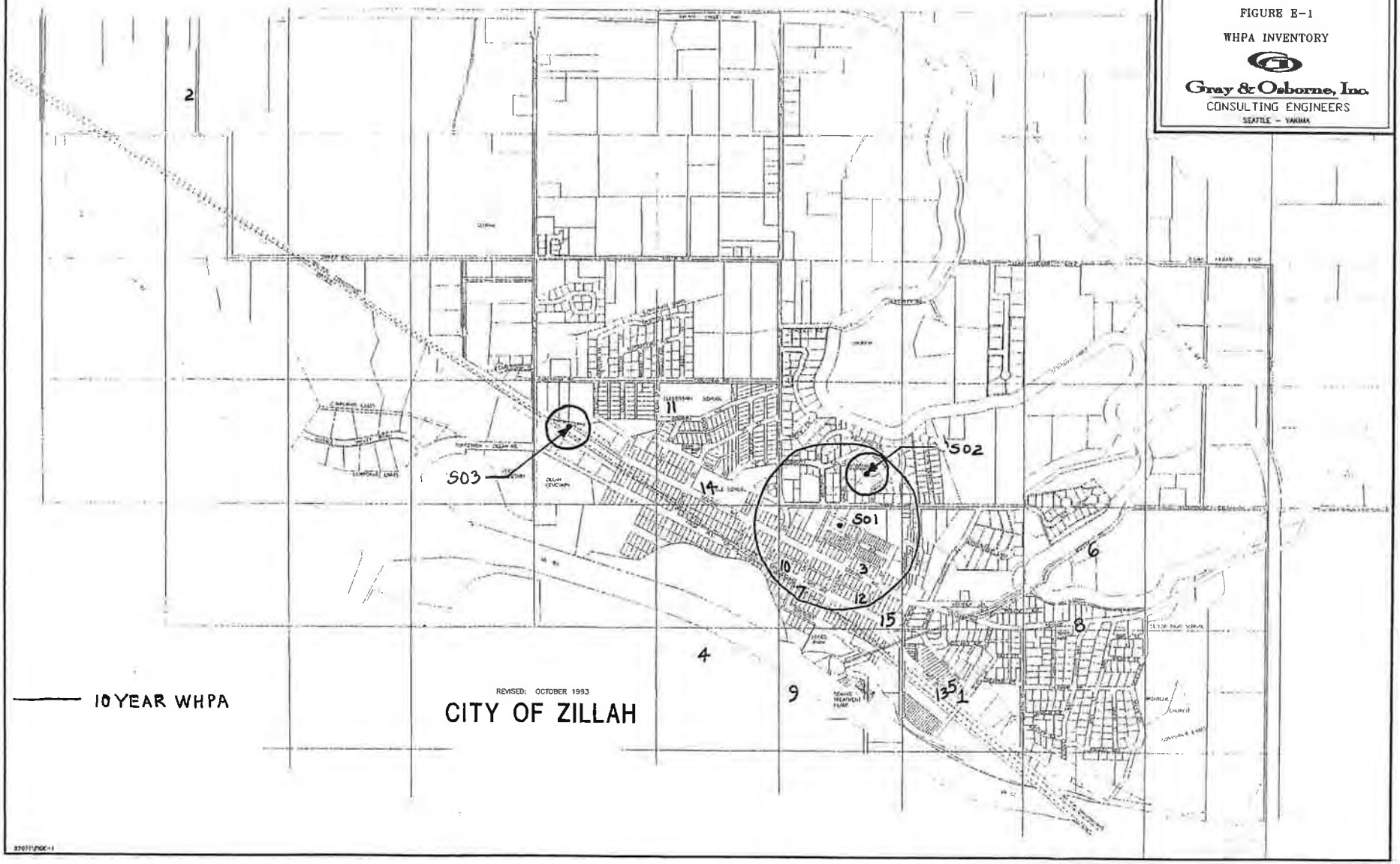

WELLHEAD SUSCEPTIBILITY

As in the susceptibility assessments, the risk of contamination from the inventory sources identified in the last section is considered to be low. The City has notified the owners of the inventory items in Table E-4 with the sample identification letter presented at the end of this appendix.

CONTINGENCY PLAN

Contingency planning is an important component of a wellhead protection program. Careful planning cannot always account for unanticipated incidents. A properly prepared and updated contingency plan helps ensure the water system personnel and officials are prepared to respond to emergency situations.

One element of a contingency plan is an evaluation of the ability of a purveyor to meet future demand based on existing capacity and water rights, even with the loss of a well to contamination.

In order to minimize the effect of a release of contaminants into the environment, procedures must be in place to ensure that the decision making personnel can execute the proper mitigation measures. This contingency plan contains emergency response procedures to be implemented immediately following a release of contaminants into the environment. These procedures identify the appropriate personnel to contact at the local, state, and federal levels, the appropriate equipment needed, and a structured plan of action to respond quickly to effectively mitigate environmental damage resulting from such a release.

In the event that the City's source water becomes contaminated, additional sources of drinking water, or treatment of the contaminated water, will be necessary. Both short-term and long-term alternative drinking water supplies, and treatment methods for common contaminants, are identified in the following sections.

SOURCE ANALYSIS

A key element in contingency planning is the determination of the City's ability to meet existing and future demand with the largest well (Well No. 1) out of service. Based on the demand projections in Chapter 2, the City can meet the existing demand with the available capacity from Well No. 2 and Well No. 3 if these wells are run 24-hours per day on the maximum day. The City cannot meet the 20-year demand projections with the available capacity from Well No. 2 and Well No. 3.

EMERGENCY MANAGEMENT

The first step in emergency management is the development of an emergency call-up list. This list has been prepared as part of the water system plan in Table 5-X. Emergency planning for several emergency situations has also been identified in Chapter 5.

SHORT-TERM CONTINGENCY PLANNING

As a matter of planning priority, it is important to identify appropriate emergency and short-term options. These include the steps required for immediate provision of water for a periods of days, weeks or months. The following is a list of short-term and emergency options that could be implemented at the City of Zillah following the short-term loss of a well.

Bottled Water

In an emergency situation which requires a well(s) to be shut off, bottled water is one alternative supply of drinking water. In many cases, sufficient supply is immediately available in either stores or a bottling facility. With Zillah being located geographically a short distance from neighboring communities, it is feasible that enough bottled water could be supplied for a short term using available sources from other communities.

Tank Trucks

Alternative supplies can be brought in by tank trucks. Zillah could use a contractor to transport hauled water. Careful attention must be given to disinfecting the tanks to avoid bacterial contamination. If the tanker truck(s) assigned to haul the water are known potable water hauling vehicles only, then the water need only be disinfected using a standard chlorine residual concentration. However, if the tanker truck(s) has been used to haul nonpotable water or the hauling status of the tanker truck(s) is not known, then the tank will be super-chlorinated with a concentration of a least 50 mg/L for a period of 24-hours. After the 24 hour period, the super-chlorinated water will be discarded and the tank filled with fresh chlorinated water and that water must be given a bacteriological test to determine if it is suitable for drinking. If this option is selected, a source of sanitary containers would be identified and supplied so that personnel are not required to use receptacles that could possibly be contaminated.

Water Conservation

The City of Zillah has developed a water conservation plan as part of this water system plan (Chapter 4). The conservation measures required for the City by the DOH include program promotion, source and service meter readings, and conservation pricing. In an emergency situation, more aggressive water conservation measures may be required than those outlined in Chapter 4. In an emergency situation which requires the complete or partial shutoff of the City's wells, non-essential water uses must be restricted. The City

may be forced to implement aggressive water conservation measures, which may include water restrictions for activities such as landscape watering, laundry, vehicle washing, or bathing. Water conservation measures may also be used with other short-term supply options.

Groundwater Treatment

Treatment of contaminated can be accomplished through *in situ* or *ex situ* methods. *In situ*, or in place treatment involves the remediation of an aquifer by introducing chemical, physical, or biological agents into the subsurface which reduce contamination levels. *Ex situ*, or pump and treat technologies involve the removal of contaminated groundwater from the subsurface and subsequent treatment at the source. Examples of *in* situ remediation include bioremediation and soil vapor extraction, while examples of *ex situ* treatment include reverse osmosis (RO), granular activated carbon (GAC), and air stripping. Both of these treatment methods can be extremely expensive. The capital investment for the treatment equipment along with cost of operating and chemical costs amount to a significant expenditure.

Surface Water Treatment

The only surface water within an acceptable distance from the City is the Yakima River. Treating water withdrawn from the Yakima River is probably not a viable short-term alternative. Since surface water is very susceptible to contamination and other water quality problems, it must pass through extensive treatment. Surface water treatment is likely to be difficult and expensive to implement and maintain on a short-term basis. In addition, water rights in the Yakima River may be a complex and time-consuming issue to resolve.

LONG-TERM CONTINGENCY PLANNING

Long-term water replacement options differ from emergency and short-term options in two ways. First, the amount of time available to evaluate the various alternatives is longer, permitting more extensive analysis of the considerations of future needs and other factors prior to a decisionmaking. Second, the range of alternatives which are viable is larger. The following sections provide a discussion of long-term options.

Drill New Wells

If investigations indicate that there is an untapped supply of groundwater in the form of a separated aquifer or a portion of the contaminated aquifer which is up-gradient and uncontaminated, it may be feasible for the City to drill new wells. This alternative can often be more economical and carry lower risk than treatment.

Groundwater Treatment

The same treatment technologies previously described are available as permanent solutions for contaminant removal. As discussed above, treatment of contaminated water should be viewed as a last resort and should be considered only after the other alternatives have been completely abandoned.

Interconnection

Interties with other water systems is sometimes a cost effective solution. However, the nearest City with a reliable water supply is the Town of Granger, 3 miles away. The cost of this intertie could be substantial.

Water Conservation

While it is possible to use conservation strategies to reduce consumption over the long-term, the water savings from conservation are not likely to be large enough to replace the production of a contaminated well.

Dual Systems

The City already maintains a separate non-potable irrigation system that serves to reduce water demands on the potable water system.

Surface Water Treatment

As in the short-term surface water treatment discussion, the water quality, water right, and costs associated with surface water treatment make it a an unattractive alternative.

ZILLAH WELLHEAD PROTECTION MANAGEMENT PLAN

Development of management strategies is essential for a successful wellhead protection program. Without proper management, potential contaminant sources are likely to become a reality. An informed public that understands the link between potential contamination sources and its drinking water is one of the most effective ways of protecting groundwater supplies. *The City will send out information pertaining to wellhead protection on an annual basis with billings to provide continuous education of the public on the merits of wellhead protection.*

Date, Year

Mr. John Doe
111 7th Avenue
Zillah, WA 98953

SUBJECT: CITY OF ZILLAH WELLHEAD PROTECTION PROGRAM

Dear Property Owner:

In Zillah, we rely upon groundwater as our primary source for drinking water. We are taking a proactive approach to ensure that Zillah maintains the safe quality of its drinking water. To do so, we have developed a Wellhead Protection Plan in accordance with State guidelines. A copy of this document is located in the Public Works Office in the City Shop.

As part of our Wellhead Protection Plan, we mapped the area overlaying the most sensitive areas around our wells, termed wellhead protection zones. These zones represent the time it takes for water to travel from the edge of the zone to the well. Following the mapping of the wellhead protection zones, an inventory of potential source of groundwater contamination was conducted. Your business was identified as a potential contamination source for our wellhead protection areas following a review of such sources in DOE databases. The presence of your business in the City's wellhead protection area means that your activities have the potential to affect the City's drinking water supplies.

We have notified the State of your presence within the City's wellhead protection area. The State can assist you with technical information to help manage your activities in a way that will best prevent groundwater contamination. Additionally, we will include guidelines in our water statements on how to protect our water supply.

We realize you are already careful to protect the environment in and around your property. We hope that informing you of your location within our wellhead protection area will result in an increase in precautions to ensure that your activities do not impact the City's drinking water supply.

Sincerely,

City of Zillah

Washington State Department of Ecology
Water Resources Program, Attn: Mr. Gene Potts
15 W Yakima Avenue
Yakima, WA 98902-3401

SUBJECT: INVENTORY OF POTENTIAL CONTAMINATION SOURCES, ZILLAH WELLHEAD PROTECTION PROGRAM

Dear Sir:

The City of Zillah has recently completed an inventory of potential contamination sources located in and around our three drinking water wells. The inventory was completed as part of our wellhead protection program, required under the water system plan under WAC 246-290-135.

We would like to share our findings with you and solicit input from you on how best to mitigate the effects of the potential contamination sources outlined in our inventory. We would appreciate any input you could provide.

Sincerely,

City of Zillah

The City Of Zillah
THE HEART OF WINE COUNTRY

June 7, 2014

Dear Resident,

The City of Zillah has developed a Source Water Protection Program as required by the State Department of Health. Wellhead protection, a component of the program, involves protecting the land areas surrounding our wells. The public water supply system in Zillah relies completely on groundwater. Because of this, the protection of wells and the aquifers which supply them is an important public health issue. This plan will help prevent the contamination of our drinking water supply.

The City of Zillah water system provides safe, clean drinking water to approximately 3,150 residents and businesses in Zillah. The source of this water is four wells that pump water from aquifers that are roughly 300 to 500 feet in the ground. As water is essential for life, protection of this water from contamination is critical.

Part of the plan is a letter of notification to all potential sources of contamination to our wells, including residents. Most of the residents live within the impact zone of our wells. As such, it is importation that you are informed of the effects to the water system when hazardous materials are put onto the ground (or in septic systems) which can contaminate our drinking water supply. Some examples of household hazardous materials are:

- Household chemicals including cleaners, bleach, and furniture polish.
- Home improvement supplies including paint, paint thinner and other solvents.
- Automotive fluids including motor oil, gasoline, antifreeze or similar products.
- Lawn and garden supplies including fertilizers and pesticides.

These materials should only be used and disposed of, according to manufactures label instructions.

We are fortunate to have a very good supply of drinking water here in Zillah. It should be everyone's intent to keep it that way for our continued good use, and for those who come along after us. Thank you for following these guidelines. If you have any questions about this matter, please feel free to contact me at 949-0380.

Sincerely,

Tim Tilley
Public Works Director

Phone (509) 829-5151 Fax (509) 829-5475 P.O. Box 475 Zillah Washington 98953 www.cityofzillah.us

The City Of Zillah

THE HEART OF WINE COUNTRY

December 4, 2014

Dear (Agency/Local Government):

We are writing to let you know that businesses or facilities you regulate are in our public water system wellhead protection area. Please take all reasonable steps to ensure that land use activities within this area do not contaminate our drinking water sources.

Our water system has 1,077 service connections, and serves about 3,161 people. The Washington State Department of Health rated our system with "low susceptible."

The enclosed map shows the 6-month and 1-, 5- and 10-year time-of-travel boundaries for our wellhead protection area. We're also sending you a list of the facilities or activities of concern. Any groundwater contamination that occurs within this wellhead protection area has a high potential to reach our well.

Thank you for your support in protecting our drinking water.

Sincerely,

Tim Tilley

Tim Tilley
Public Works Director

Phone (509) 829-5151 Fax (509) 829-5475 P.O. Box 475 Zillah Washington 98953 www.cityofzillah.us

5.3 UPDATES AND MODIFICATIONS TO THE WELLHEAD PROTECTION PLAN

When completed, information regarding the City's new source well will be added to the City's Wellhead Protection Plan. In addition, the Potential Contaminant Source and Notification List, originally developed in 2000, updated in 2006, has been updated as part of this *Water System Plan* as shown in Table 5-1.

TABLE 5-1 POTENTIAL CONTAMINANT SOURCE AND NOTIFICATION LIST

No.	Potential Source	Location
1.	Bleyhl Farm Service	1404 First Avenue
2.	Borton Fruit	1511 Cutler Way
3.	Circle K East	824 Zillah West Road
4.	Cherry Patch	101 First Avenue
5.	Zillah School District Bus Garage	205 Second Avenue
6.	Zillah Wastewater Treatment Facility	740 Railroad Avenue
7.	Zillah Public Works Department	130 First Avenue
8.	Circle K West	900 Vintage Valley
9.	Stadelman Fruit Warehouse	100 Cheyne Road
10.	Stadelman Fruit Warehouse	111 Meade Dr. (First Ave. & Meade Dr.)
11.	Shawn Hyatt Construction	1420 Gilbert Rd. / 300 Golden Dr.
12.	Circle L Minimart / Texaco	723 First Avenue
13.	RSI	504 First Avenue
14.	Stadelman Bin Storage	W. Northstone Parkway
15.	Community Dental Care	812 Zillah West Road
16.	Benjamin Weege Dentist	111 First Avenue
17.	Valley Hills Funeral Home	607 Second Avenue
18.	Davita Zillah Dialysis Center	823 Zillah West Road
19.	Fire District #5	90 7th Street
20.	City of Zillah Fire Department	717 First Avenue

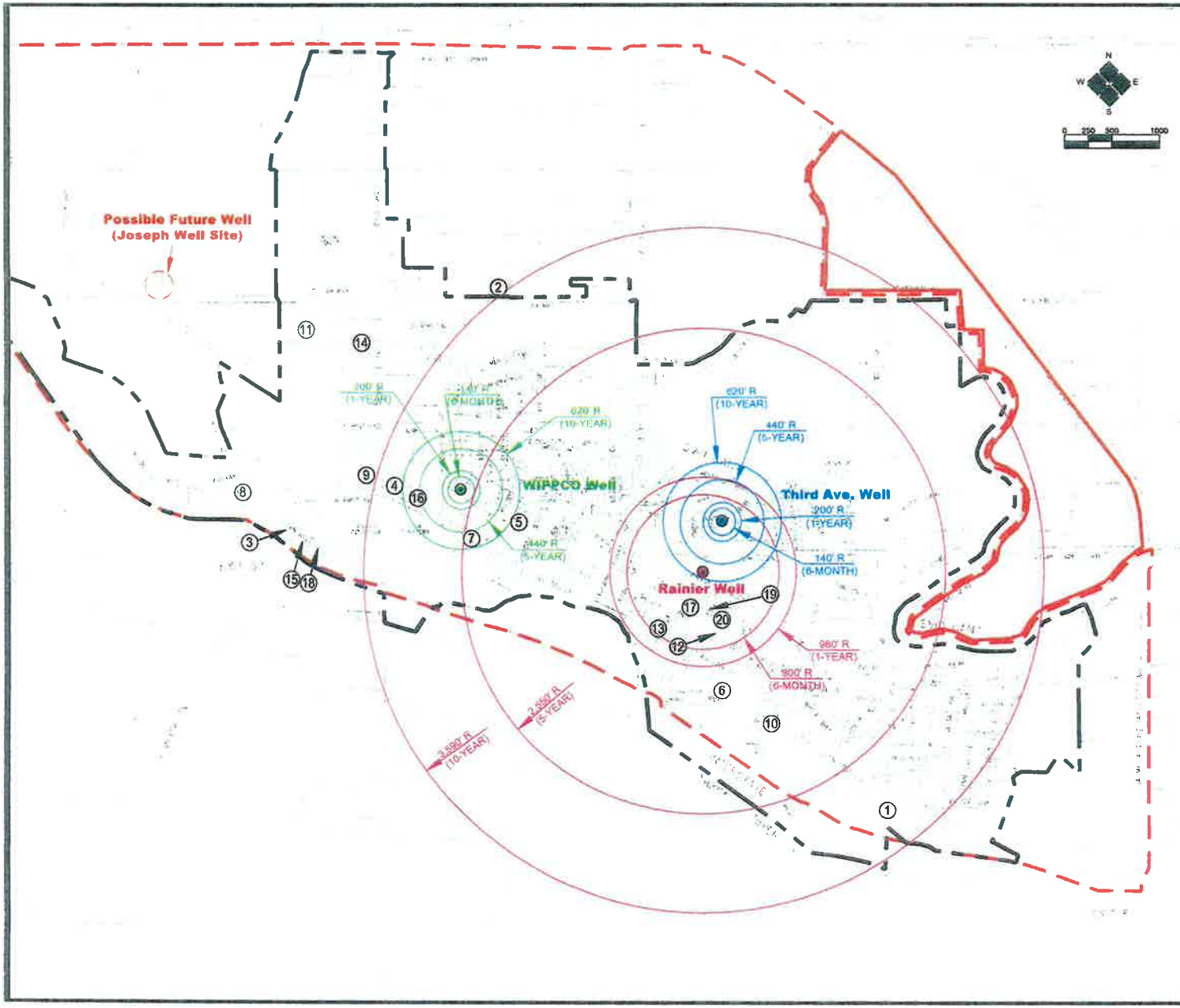

CITY OF ZILLAH

Water System Plan Update

POTENTIAL GROUNDWATER CONTAMINANT SOURCES

LEGEND

ZILLAH CITY LIMITS

ZILLAH UGA BOUNDARY

SOURCE WELL

WELLHEAD PROTECTION AREA

POTENTIAL CONTAMINANT SOURCE (#)

No.	Potential Source
1.	Bleyhl Farm Service
2.	Borton Fruit
3.	Circle K East
4.	Cherry Patch
5.	Zillah School District Bus Garage
6.	Zillah Wastewater Treatment Facility
7.	Zillah Public Works Department
8.	Circle K West
9.	Stadelman Fruit Warehouse
10.	Stadelman Fruit Warehouse
11.	Shawn Hyatt Construction
12.	Circle L Minimart / Texaco
13.	RSI
14.	Stadelman Bin Storage
15.	Community Dental Care
16.	Benjamin Weege Dentist
17.	Valley Hills Funeral Home
18.	Davita Zillah Dialysis Center
19.	Fire District #5
20.	City of Zillah Fire Department

HLA
Huibregtse, Louman Associates, Inc.
Civil Engineering • Land Surveying • Planning
2803 River Road
Yakima, WA 98902
509.966.7000
Fax 509.965.3800
www.hlacivil.com

12-4-14
P:\Projects\2013\13033\CWP FIGURES.dwg

FIGURE 5-1

CROSS-CONNECTION CONTROL MANUAL

CITY OF ZILLAH
CROSS CONNECTION CONTROL MANUAL

I. Definitions

A. Approved
Accepted by the Building Inspector as meeting an applicable specification stated or cited in this regulation.

B. Auxiliary Water Supply
Any water supply to the premises other than the City's approved public potable water supply.

C. Backflow
The undesirable reversal of flow of water or other substances through a cross-connection and into the piping of a public water system or consumer's potable water system.

D. Backflow Prevention Assembly
The nomenclature "assembly" refers to a backflow preventer which is designed to be in-line tested and repaired, and to meet the head loss and flow requirements of the recognized approval authority. The "assembly" consists of the backflow prevention unit, two resilient seated shutoff valves, and test cocks.

E. Backflow Prevention Device
The nomenclature "device" refers to a backflow preventer that is not designed for in-line testing.

1. Air Gap (AG)
A physical separation between the free-flowing end of a potable water supply pipeline and the overflow rim of an open or non-pressurized receiving vessel. To be an "approved air gap", the separation must be at least twice the diameter of the supply piping measured vertically from the overflow rim of the receiving vessel, and in no case be less than one inch. When located within three pipe diameters (measured horizontally) of a wall, the separation must be at least three times the diameter of the supply piping or four times the diameter of the supply piping for intersecting walls.

2. Atmospheric Vacuum Breaker (AVB)
A device which contains a float check (poppet), a check seat and an air inlet vent. When water pressure is reduced to a gauge pressure of zero or below, the float check drops, allowing air to enter the device, preventing backsiphonage. It is designed to prevent backsiphonage only.

3. Double Check Valve Assembly (DCVA)
An approved assemble consisting of two independently operating check valves, loaded to the closed position by springs or weights, and installed as a unit with, and

between, two resilient seated shut off valves and having suitable connections for testing.

4. Pressure Vacuum Breaker Assembly (PVBA)
An approved assembly consisting of a spring loaded check valve loaded to the closed position and installed as a unit with, and between, two resilient seated shut off valves and having suitable connections for testing. It is designed to protect against backsiphonage only.

5. Reduced Pressure Backflow Assembly (RPBA)
An approved assembly consisting of two independently operated check valves, spring loaded to the closed position, separated by a spring loaded differential pressure relief valve loaded to the open position, and installed as a unit with, and between, two resilient seated shut off valves and having four suitable test cocks for checking the water tightness of the check valves and the operation of the relief valve.

F. Backpressure
Backflow due to increased pressure above the supply pressure caused by pumps, gravity, or other sources of pressure.

G. Backsiphonage
Backflow due to negative or subatomic pressure in the distribution system.

H. City
The City of Zillah or their duly authorized representative.

I. Contamination
An impairment of the quality of the potable water which creates an actual hazard to the public health through poisoning or through the spread of diseases by sewage, industrial fluids or waste. Also defined as severe or high hazard. Also see *Pollution*. The term "contamination" used in EPA and state drinking water regulations "Maximum contamination level" bestows a different meaning than that used in describing a cross-connection hazard.

J. Cross-Connection
Any actual or potential physical connection between a public water system and any source of non-potable liquid, solid or gas that could contaminate the public water supply by backflow.

K. Customer
For purposes of cross-connection control, the owner or operator of a plumbing system connected to a public water system via a service connection.

L. Director
The Director, or delegated representative, in charge of the City of Zillah Department of Public Works.

M. In-Premise Protection
A method of backflow prevention in which a backflow prevention assembly is installed on the customer's internal water supply line prior to a fixture, piece of equipment or area that has been determined to have backflow potential. This shall effectively isolate the fixture, piece of equipment or area from the rest of the customer's distribution system.

N. Owner
Any person who has legal title to, or license to operate or occupy, a property upon which a cross-connection inspection will be made or upon which a cross-connection is present.

O. Person
Any individual, partnership, company, public or private corporation, political subdivision or agency of the State or of the United States or any other legal entity.

P. Pollution
An impairment of the quality of the potable water supply which does not create a hazard to the public health but which does adversely affect the aesthetic qualities of such potable waters for domestic use. Also defined as low hazard. See also *Contamination.*

Q. Premise Isolation
A method of protecting a public water system by installation of approved air gaps or approved backflow prevention assemblies at or near the service connection to isolated the customer's plumbing system from the purveyor's distribution system.

R. Purveyor
The Purveyor or delegated representative in charge of the City of Zillah water system.

S. Reclaimed Water
Effluent derived in any part from sewage from a wastewater treatment system that has been adequately and reliably treated, so that as a result of that treatment, it is suitable for a direct beneficial use or a controlled use that would not otherwise occur and is no longer considered wastewater.

T. Water Service Entrance
That point in the owner's water system beyond the sanitary control of the City; generally considered to be the outlet end of the water meter and always before any unprotected branch.

II. Purpose and Scope

A. This Manual establishes minimum standards for the City to protect the public potable water supply from possible contamination of pollution due to backflow or back-siphon from a customer's private internal system into the public potable water system.

B. This Manual establishes minimum cross-connection control operating policies, provides guidelines and requirements for installation, testing, and maintenance of approved backflow prevention assemblies and establishes permitting, and inspection requirements for existing and new backflow prevention assemblies.

C. The purpose of this Manual is not to create or otherwise establish or designate any particular class or group of persons who will or should be especially protected or benefited by the terms of this Manual.

III. Authority

A. The Federal Safe Drinking Water Act of 1974 (and Amendments of 1996), the statutes of the State of Washington Title 43 RCW and Chapter 246-290-490 WAC require purveyors to "protect public water systems from contamination due to cross connections".

B. *City of Zillah Municipal Code, Chapter 13.08 regulates cross-connections.*

IV. Responsibility

A. The Director shall be responsible for administering the provisions of this Manual.

B. If the Director determines, consistent with the provisions of this Manual, a backflow prevention assembly is required at any customer's premises, the Director, or his delegated agent, shall give notice to the customer to install an air gap or approved backflow prevention assembly which isolates the customer's plumbing system from the City's distribution system.

C. Installation of requested backflow protection assemblies shall be a condition of continued water service from the City. Service from the City's water supply system to any premises upon which the potential for backflow into the city system exists shall be discontinued or refused unless corrective action is taken in accordance with this manual.

D. Upon installation the customer shall contact the City requesting inspection of said assembly or assemblies. The customer shall be subject to all applicable inspection and permitting fees.

E. Upon approval of the installation by the City the customer shall have the assembly or assemblies tested by a State of Washington certified Backflow Assembly Tester (BAT) and shall submit a copy of the test report signed by the property owner to the City in accordance with this Manual.

V. Failure to Comply - Violations - Penalties

Any person, firm, or corporation who willfully violates any provisions and requirements of this Manual or Zillah Municipal Code Chapter 13.08 shall be subject to discontinuance of supply of City water to the premise where the violation exists. Discontinuance of the City potable supply to the premise shall remain in effect until corrective action as required by the Director is completed, tested and approved.

VI. Requirements

General

A. Compliance with the provisions of the City of Zillah Cross Connection Control Manual shall be a condition of receiving the City of Zillah water supply.

B. It is unlawful for any person to allow any contaminants or pollutants to back feed from their facility and/or property into the city distribution system. Any connections now existing or hereafter installed that could allow for back feed of any contaminants or pollutants into the city distribution system shall be discontinued and/or eliminated. Connection which cannot be discontinued and/or eliminated shall require the installation of a State of Washington approved backflow protection assembly that shall be regularly inspected and tested in accordance with the City of Zillah Cross Connection Control Manual.

C. When the City requires that the public water supply be protected by premise isolation, the owner shall be responsible for water quality beyond the outlet end of the premise isolation assembly and should utilize fixture isolation protection for that purpose. Fixture isolation assemblies shall be installed in accordance with the Uniform Plumbing Code.

D. The City may allow that the public supply be protected by fixture isolation for existing customer connections. Such an allowance shall only be permitted so long as the Director determines that the level of protection is adequate to protect the City's distribution system, and the owner agrees, in writing (unless waived by the City) to (1) implement and maintain the fixture isolating backflow protection to the satisfaction of the City; and (2) comply with all applicable plumbing codes, including permitting requirements.

City of Zillah

E. On new installations the City will provide on-site evaluation and/or inspection of plans in order to determine the type of backflow prevention assembly, if any, that will be required.

F. For premises existing prior to the start of this program, the City will perform evaluations and inspections of plans and/or premises and inform the owner by letter of any corrective action deemed necessary, the method of achieving the correction, and the time allowed for the correction to be made. Up to sixty days will be allowed; however, this time period may be shortened by the Director depending upon the degree of hazard involved and the history of the device(s) in question.

G. Premises are subject to inspection on or after the expiration date of required action to correct a cross-connection. Premises that have failed to comply with the City's request shall receive written notice, via registered mail, that water service to the premise will be terminated within a period not to exceed thirty (30) calendar days. In the event the owner informs the City of extenuating circumstances as to why the correction has not been completed, the City may grant a time extension up to but not exceeding sixty (60) days.

H. If the City determines at any time that a serious threat to the public health exists, the water service shall be terminated immediately, provided, however, that notice will be posted on the premises affected at the time said service is terminated.

I. Inspection shall be done during the initial installation, during on-site reviews of existing installations, and after any relocation.

J. When an initial installation or test identifies a backflow prevention assembly is not properly functioning, the owner shall correct the malfunction and have the assembly inspected and re-tested until the backflow device operates correctly.

Owner

K. The owner shall be responsible for the elimination or protection, by an air gap or approved backflow prevention assembly, of all cross-connection on their premises.

L. The owner after having been informed by a letter from the City shall, at their expense, install any and all required backflow prevention assemblies.

M. The Owner shall, at their expense, be responsible for having all backflow prevention assemblies tested: (1) at the time of installation, (2) annually after installation, or more frequently if test indicate repeated failures to meet test criteria; and (3) after an assembly is repaired, reinstalled or relocated or an air gap is re-plumbed or replaced by an approved RPBA. The test shall be performed by a State of Washington certified Backflow Assembly Tester (BAT) and signed by the owner. The results of the tests shall be reported within 30 days to the Director on a form provided by or approved by the City.

N. The owner shall, immediately, or no later than 30 days, or otherwise as directed by the Director, correct any malfunction of the backflow preventer which is revealed by periodic testing.

O. The owner shall inform the City of any proposed or modified cross-connection and also any existing cross-connections of which the owner has actual knowledge but has not been found by the City.

P. The owner shall install only backflow prevention assemblies approved by the City.

Q. Any owner having a private well or other private water source shall not cross-connect to the City's system.

R. The owner shall provide access to premises to the City at the City's request. Failure to provide access to inspect facilities shall be grounds for termination of water service.

S. The owner shall be responsible for the payment of all fees for permits, annual or semi-annual device testing, re-testing in the case that the assembly fails to operate correctly, and any re-inspection for non-compliance with City requirements. Permits and fee schedules shall be as specified in the applicable sections the City of Zillah's Municipal Code.

VII. Installation and Testing - Minimum Requirements

A. Minimum requirements for the installation and testing of all backflow protection assemblies shall be in accordance with the Cross Connection Control Manual - Accepted Procedure and Practice produced by the Pacific Northwest Section, American Water Works Association (PNWS/AWWA), Sixth Edition, December 1995, including subsequent revisions, adopted by reference herein. A copy is available for viewing at the Public Works Department of the City of Zillah, additional copies can be purchased from the PNWS/AWWA.

B. In addition, all backflow protection assemblies shall be installed at a location that is easily accessible for inspection and testing. Assemblies located in vaults shall have adequate clearances and depths to allow the City to inspect and test. Assemblies that cannot be easily and readily inspected shall be required to be relocated and re-plumbed as required by the City. The owner shall contact the City of applicable installation requirements and standards.

C. All bypass lines parallel to a line on which a backflow prevention assembly is installed shall have an approved backflow prevention assembly installed that is equal in type to the assembly required by the City on the main line.

VIII. Backflow Protection Devices

A. All backflow protection assemblies (RPBAs, RPDAs, DCVAs, DCDAs, PVBAs and AVBs) installed for protection of the public water supply shall be models included on the current approved backflow prevention assemblies list developed by the University of Southern California (USC) Foundation for Cross-Connection Control and Hydraulic Research Manual of Cross Connection Control or other such agency acceptable to the Director. The Washington Department of Health maintains a copy of this list (DOH Publication # 331-090). A copy is available for viewing at the Public Works Department of the City of Zillah, additional copies can be purchased from the PNWS/AWWA.

B. Any existing backflow protection assembly in use, but not currently listed by USC, can continue to be used providing all the following conditions are met

1. The assemblies were included on the City and/or USC list of approved backflow prevention assemblies at the time of installation;
2. The assemblies have been properly maintained;

3. The assemblies are functioning properly based on inspection by the City and testing by a certified Backflow Assembly Tester;
4. The degree of protection is satisfactory for protection of the City's water system as determined by the Director.

C. When an unlisted assembly does not meet the above conditions, is moved, or can not be repaired using spare parts from the original manufacturer, the assembly shall be replaced by an assembly currently listed as approved by the USC Foundation for Cross-Connection Control and Hydraulic Research or other such agency acceptable to the Director.

IX. Applicability

A. The provisions of this Manual are applicable to all connections to the City water supply. The City recognizes there are varying degrees of risks associated with different types of uses and will consider this when determining if a cross connection exists and applicable backflow prevention assemblies.

B. The following Tables 1, 2, 3 and 4 are derived from the Pacific Northwest Section - American Water Works Association's Cross Connection Control Manual, Accepted Procedures and Practices, Sixth Edition, 1995. These tables, subject to revisions, provide minimum requirements and guidance for the assessment of the degree of hazard and required level of protection. If the actual degree of hazard is determined, by the Director, to be higher than these tables indicate, a higher lever of protection may be required.

Table 1. Summarizes the relative level of protection provided by the different categories of assemblies and devices.
Table 2. A list of customer categories or types of water use where premise isolation is required in all cases.
Table 3. A list of customer categories or types of water use where premise isolation is required for existing service connections is accordance with the provisions of Section VI - D of this Manual.
Table 4. A list of some of the fixtures, equipment or uses of water which may constitute a cross connection and the minimum level of protection required.

TABLE 1
RELATIVE LEVEL OF PROTECTION

Abbreviations	Description/Application Summary [1]	Relative Level of Protection [2]
AG	Approved Air Gap For high and low health hazards, backpressure and backsiphonage	1
RPBA & RPDA	Reduced Pressure Backflow Assembly Reduced Pressure Detector Assembly For high and low health hazards, backpressure and backsiphonage	2
DCVA & DCDA	Double Check Valve Assembly Double Check Detector Assembly For low health hazards only, backpressure and backsiphonage	3
PVBA & SVBA	Pressure Vacuum Breaker Assembly Spill-Resistant Vacuum Breaker Assembly For high and low health hazards, backsiphonage only	4
AVB HBVB LFVB DCAV DCV	Atmospheric Vacuum Breaker Hose Bib Vacuum Breaker Lab Faucet Vacuum Breaker For very low health hazards, and backsiphonage only Dual Check with Atmospheric Vent Dual Check Valve or Meter Check Valve (Dual) For very low health hazards, backpressure and backsiphonage	5

Note: [1] The above descriptions of applicable and relative level of protection are based on the perspective of the City's selection of assemblies and devices for the prevention of the contamination of the water distribution system. Plumbing codes may classify some devices as providing higher levels of protection and as suitable for both backpressure and backsiphonage.

[2] This Manual does not address the location, inspection, and testing of AVBs, HBVBs, LFVBs, DCAVs and DCVs.

TABLE 2
MANDATORY SERVICE ISOLATION

Category of Premise or Use of Water	Assessed Health Hazard	Minimum Protection Recommended at Meter
Radioactive material processing plants or nuclear reactors	severe	RPBA & AG
Sewer treatment plants or sewage pump station	severe	RPBA & AG
Hospitals, medical centers, medical/dental or vet clinics, plasma centers, blood plasma centers	high	RPBA
Mortuaries	high	RPBA
Laboratories	high	RPBA
Metal plating industries	high	RPBA
Petroleum processing or storage plants	high	RPBA
Food processing and beverage bottling plants, canneries, packing (slaughter) houses	high	RPBA
Film processing facilities	high	RPBA
Piers and docks, graving docks, boat marinas, dry docks	high	RPBA
Commercial laundries and dry cleaners	high	RPBA
Premises restricting inspection	high	RPBA
Premises with unapproved auxiliary supply, including reclaimed water	high	RPBA
New	high	RPBA
Existing	low	DCVA
Interconnected with potable water supply		
Not interconnected with potable water supply		
Premises with approved auxiliary supply	low	DCVA
Car washes	high	RPBA
Premises with fire sprinkler systems and/or private hydrants		
With chemical addition	high	RPBA/RPDA
Without chemical addition	low	DCVA/DCDA
Tall buildings (over 30 feet) (elevation above the connection between the service line and the distribution system)	low	DCVA
Irrigation Systems (individually metered and supplied by domestic water supply)		
With chemical addition	high	RPBA
Without chemical addition	low	DCVA

TABLE 3
RECOMMENDED SERVICE ISOLATION

Category of Premise or Use of Water	Assessed Health Hazard	Minimum Protection Recommended at Meter
Battery manufacturing or repair facilities	high	RPBA
Ice manufacturing and cold storage plants	high	RPBA
Residential irrigation	low	DCVA

TABLE 4
RECOMMENDED PROTECTION AT FIXTURES AND EQUIPMENT

Description of fixture, equipment or use of water [1]	Assessed Health Hazard	Minimum Protection at Fixture	Additional Premise or Internal Isolation [2]
Air compressor	low	DCVA	
Air conditioning systems	high	RPBA	
Air washers	high	RPBA	
Aquarium make-up water	high	AG/RPBA	
Aspirators, medical/lab	high	AVB	RPBA
Aspirators, medical/lab	high	RPBA	
Aspirator, weedicide, herbicide, and pesticide	high	RPBA	
Aspirator, vault drain	high	RPBA	
Autoclave	high	RPBA	
Autopsy tables	high	RPBA	
Baptismal fountain	high/low	RPBA, AG/AVB	
Bathtub, below rim filler	high	RPBA	
Bedpan washer	high	RPBA	
Post-mix beverage dispenser using CO2	high	RPBA	
Bidets	low	AVB	
Boiler feed lines	high	RPBA	
Bottle washing equipment	high	RPBA	
Bottle washing equipment	high	PVBA/AVB	RPBA
Box hydrant (irrigation)	high	PVBA/DCVA	
Brine tank	low	AG/DCVA	
Can washing equipment	high	RPBA	
Can washing equipment	high	PVBA/AVB	RPBA
Chemical feed tank for industrial process	high	AG/RPBA	RPBA

Table 4: Continued

Description of fixture, equipment or use of water [1]	Assessed Health Hazard	Minimum Protection at Fixture	Additional Premise or Internal Isolation [2]
Chemical feeder for commercial cleaners	high	AG/RPBA	
Chemical feeder for commercial cleaners	high	AVB/PVBA	RPBA/DCVA
Chlorinators	high	RPBA	
Commercial coffee urns	low	AG/AVB	
Computer cooling lines	high	RPBA	
Condensate tanks	high	RPBA	
Commercial cooling kettles	low	AG/AVB	
Cooling towers	high	AG/RPBA	
Decorative ponds	high	AG/RPBA	
Degreasing equipment	high	RPBA	
Dental equipment/cuspidors	high	RPBA	RPBA
Dialysis equipment	high	RPBA	
Dishwashers	low	AVB	
Drinking fountains	low	AG	
Dye vats and tanks	high	AG/RPBA	
Etching tanks	high	AG/RPBA	RPBA
Fermenting tanks	high	AG/RPBA	RPBA
Fertilizer injection	high	RPBA	
Film processors	high	RPBA	
Fire dept. connection	low	DCVA	
Fire sprinkler system w/o chemical addition	low	DCVA/DCDA	
Fire sprinkler system with chemical addition	high	RPBA/RPDA	
Floor drains	high	AG	
Flushing floor drains	high	AVB	DCVA
Fume hoods (lab)	high	AVB	RPBA
Garbage can washers	high	RPBA	
Heat exchangers other than double wall with leak path	high	RPBA	
Heat pumps	high	RPBA	
High pressure washers w/o chemical injection	low	DCVA	
Hose bibbs (residential)	low	AVB/HBVB	
Hose bibbs (industrial)	varies	AVB/HBVB	RPBA/DCVA
Hoses, kitchen rinse	low	AVB	
Hot tubs	high	AG/RPBA	
Commercial hot water heating boilers	high	RPBA	
Hydrotherapy baths	high	RPBA	
Ice makers	high	AG/RPBA	
Industrial fluid systems	high	RPBA	

Table 4: Continued

Description of fixture, equipment or use of water [1]	Assessed Health Hazard	Minimum Protection at Fixture	Additional Premise or Internal Isolation [2]
Intertied (looped) services	low	DCVA	
Irrigation system (lawn) with chemical addition	high	RPBA	
Irrigation system (lawn) w/o chemical addition	low	PVBA/DCVA	
Janitor sinks	low	AVB/HBVB	
Kitchen equipment	low	AVB	
Laboratory equipment	high	AVB/LFVB	RPBA
Laundry machines, commercial	high	RPBA	
Livestock drinking tanks	high	AC/AVB	DCVA
Make-up tanks	high	AG/RPBA	
Mobile carpet cleaners	high	RPBA	
Pesticide applicator trucks	high	AG/RPBA	
Photo developing sinks/tanks	high	RPBA	
Private fire hydrants	low	DCVA	
Pump prime lines	high	RPBA	
Radiator flushing equipment	high	RPBA	
Recreational vehicle dump station	severe	AG	RPBA
Sewer connected equipment	severe	AG	
Sewer flushing	severe	AG	
Spas	high	AG/RPBA	
Steam generating equipment	high	RPBA	
Sterilizers	high	RPBA	
Stills	high	RPBA	
Sumps	high	AG	
Swimming pools	high	AG/RPBA	
Trap primers	high	AG	
Used or gray water systems	high	RPBA	
X-ray equipment	high	RPBA	

[1] The information in Table 4 may differ from the backflow prevention requirements for individual plumbing fixtures found in plumbing codes. For public health protection within a customer's premise, the Uniform Plumbing Code governs. Table 4 is provided to illustrate only some of the health hazards found in plumbing systems. This table will be used by the City in assessing the degree of hazard a customer's plumbing system places upon the City's water distribution system. Deficiencies in backflow prevention within the customer's premise should be compensated for through the selection of an appropriate assembly for premise isolation.

[2] Where a high health hazard is assessed, the use of an atmospheric vacuum breaker or other backflow devise for protection at a fixture should only be allowed when area or premise isolation is provided by an approved backflow assembly.

X. Administrative Procedures

The City of Zillah has recently amended the Municipal Code and adopted this Cross Connection Control Program Manual. In order to carry out the provisions of these new requirements, a surveillance program based upon proper management, effective customer education, adequate record keeping, and aggressive inspections must be properly implemented.

Such a program for cross connections and sanitary hazards initially requires the inspection of all new and existing buildings, structures, and grounds. As proposed, this procedure will require the Public Works Director and Building Official to assist with these requirements. Each must be knowledgeable in the field of pumping and building inspection, pipe arrangements, and certified in cross connection control.

1. Minimum Requirements

The following requirements are based on the most current edition of the Cross Connection Control Manual published by the Pacific Northwest Section - American Water Works Association (PNWS-AWWA). These requirements are provided for clarification and in any disagreement between these listed below and requirements listed elsewhere in this Manual, the more restrictive shall govern. As described in elsewhere in this manual, the premise isolation requirement may be waived or reduced for certain existing businesses, providing certain conditions are met.

RPBAs

A. Premises on which materials dangerous to health or wherein toxic substances are handled, shall be required to have an approved reduced backflow assembly installed at the service connection.

B. Premises where entry is physically restricted so that inspections for cross connections cannot be made sufficient to assure that cross connections do not exist, shall be required to have an approved reduced pressure backflow assembly installed at the service connection.

C. Premises having an auxiliary water supply with internal cross connections that are not correctable or intricate plumbing arrangements which make it impractical to ascertain whether or not cross connections exist, shall be required to have an approved reduced pressure backflow assembly installed at the service connection.

DCVAs

D. Premises which handle a substance that is objectionable, although not a health hazard, in a manner constituting a potential cross connection, shall be required to have an approved double check valve assembly installed at the service connection.

E. Premises having an auxiliary water supply with no known cross connections, shall be required to have an approved double check valve assembly installed at the service connection.

F. Premises on which any substance that is not a health hazard but is under pressure so as to enable entry into the public water supply or where a cross connection could reasonably be expected to be present, shall be required to have an approved double check valve assembly installed at the service connection.

G. Premises which have a repeated history of cross connections being established or re-established, shall be required to have an approved double check valve assembly installed at the service connection.

Fire Protection Systems

H. Premises having a fire protection system where no chemicals are allowed to be used, shall be required to have an approved double check valve assembly (DCVA) or approved double check detector assembly (DCDA) installed at the fire service connection.

I. Residential premises having a fire protection system where no chemicals are allowed to be used, shall be required to have an approved double check valve assembly (DCVA) installed at the water service connection.

J. Residential fire systems with a flow through system using approved potable water pipe and materials shall not be required to install backflow protection.

Irrigation Systems

K. Premises having an irrigation system where chemicals or herbicides are allowed to be used, shall be required to have an approved reduced pressure backflow assembly installed at the service connection.

L. Non-residential premises having an irrigation system which is subject to flooding, , elevated piping or where compressed air is allowed to be used, shall be required to have an approved double check valve assembly installed at the service connection.

M. Non-residential premises having an irrigation system which does not fall into one of the prior two categories, shall be required to have an approved pressure vacuum breaker assembly or double check valve assembly installed on the system.

2. New and Proposed Construction

A. Upon application for a building permit, the Building Official or authorized designate shall require detailed plans and specifications for the plumbing installation. The customer shall also be required to complete a Cross Connection Control Program Survey.

B. The Building Official, or authorized designate, shall review these plans, specifications and survey to determine the probability of cross connections, the availability of auxiliary water supply, and the handling of substances which, if introduced into the water supply, would constitute a health, plumbing, or system hazard.

C. During the construction phase of any new building, structure, or ground installation, and during the plumbing inspection, the Building Official or authorized designate will also perform the required cross connection control inspection. Upon completion of

the plumbing inspections the Building Official or authorized designate shall complete the CCC Field Inspection Form, to document that subject cross connection control inspection has been made and to document the location of any and all backflow prevention assemblies and/or devices.

D. All backflow prevention assemblies installed internally or at the service connection shall be tested by a certified Backflow Assembly Tester and the test reports submitted to the Building Official or authorized designate (using the Backflow Assembly Test Report form).

3. Existing Buildings, Structures, and Grounds

The systematic program of inspection shall be established with priority given on the basis of risk to public health and shall be conducted as outlined below.

A. A form letter will be sent to each commercial and industrial metered customer explaining the program and stressing the relationship between cross connections and water-borne disease epidemics, types of health hazards, and cross connection. The duties and liabilities of the owners or managers as well as the rules and regulations that apply, will be explained. The letter will also include a questionnaire of desired information such as the type of water used on the premises, auxiliary water supplies, chemicals used, and certain types of fixtures installed. These questionnaires are to be returned to the Building Official or authorized designate.

B. Based on the known information of the customers operation and the information received on the questionnaire, an inspection schedule will be prepared based on the location of the hazard within the facility and the degree of hazard posed to the utility.

C. Approximately 10 days prior to the scheduled date of inspection the City will contact the owner, requesting an appointment with the owner/manager of the premises to discuss the necessity for the inspection and other pertinent matters.

D. On the appointed date the Building Official or authorized designate will meet with the owner/manager and explain the purpose of the inspection. The Building Official or authorized designate will suggest the owner/manager appoint an individual from his firm that is knowledgeable with the firm's plumbing system to accompany the inspectors. At this time, the Building Official or authorized designate can obtain any blue prints or drawings of the "in-plant" system that are available and discuss any questions or other problems the owner/manager may have.

E. On the date of the scheduled inspection, the City of Zillah's Inspector, with the owner's representative, will make a complete physical survey of all exposed piping. The underground system is to be checked as accurately as possible. All lines will be sketched on a field drawing, except where intricate plumbing arrangements make it impractical. In this case an "as-built" drawing will be requested. Each line shall be followed to its end and a survey made to determine whether there are any actual or potential cross connections or any conditions that might tend to pollute the potable water system.

F. Immediately upon completion of the survey the inspection team will orally brief the owner/manager of their findings.

G. The inspection team will prepare a written report that will include, but shall not be limited to, the following:

- Complete identifying information.
- All cross connections found, their location and optional methods of control.
- All industrial fluids, chemical, or other contaminating liquids used or pumped under pressure and their use and probability of cross connections.
- Any applicable drawings, sketches, blueprints or other documents used in support of the inspection.
- A summary of findings.
- Specific recommendations.

H. The inspection team will submit a copy of the completed report to the Building Official or authorized designate.

I. Upon completion of the review of the report the Building Official or authorized designate shall prepare a letter to the respective customer. The letter will outline the findings of the report, the corrective action required, and establish a corrective action completion date (usually 60 days). A copy of the report will be maintained on file for review by the State Department of Health.

J. On the corrective action completion date, or soon thereafter, the Inspector shall take a copy of the report and re-inspect the items that required corrective action.

K. Upon completion, the Inspector shall report in writing to the Building Official or authorized designate, the results of the re-inspection.

L. After receiving the results of the re-inspection the Building Official or authorized designate shall take such action as deemed appropriate under the provisions of the City's Cross Connection Control Manual.

M. When all required actions have been completed and the device(s) tested by a certified Backflow Assembly Tester, a letter shall be sent to the Owner. Said letter will inform them of the annual testing requirements, including maintaining all backflow prevention devices in proper operating order as evidenced by submission, to the City, of the annual testing report.

4. Residential Education and Awareness

The City may develop or acquire pamphlets and/or bill stuffers to send to all of the water system customers. These shall include, but are not limited to, the following subjects:

A. Home irrigation safety;
B. Residential fire sprinkler systems;
C. Health hazards associated with hose connection (chemical sprayers, radiator flush kits, etc.), utility sinks, and other household dangers.

If the City develops this program, this information shall be mailed directly to the customers.

The City shall also take advantage of other opportunities for public education by developing a traveling exhibit that can be set up at community events, schools and at City Hall.

5. Registering of Certified Testers

The City will maintain a list of Backflow Assembly Testers (BATs) that may be provided to customers. Persons or organizations wishing to be added to this list will be required to provide the City with copies of the following:

A. Proof of current certification by the State of Washington as a BAT for all persons that are authorized to perform tests.

B. Proof of current calibration tests performed for all testing equipment (annual calibration is required).

C. A copy of a current business license authorizing the company to work in the City of Zillah.

6. Record keeping and tracking of assemblies

The City will establish records that will meet all of the record keeping requirements of the state and allow effective monitoring and tracking of customer compliance with the annual backflow assembly testing requirements. The general content of the City's records will be as follows:

Information on each assembly will include: the location of the business (or water service) where it is located (some businesses may have multiple devices), initial inspection information for each location (inspector, date, survey #, comments) installation information (installed by, contact information., date installed, specific location, water line size, water pressure, hazard level and hazard protected), assembly information (assembly #, type manufacturer, size, model, serial # and inspection period), and a complete testing history (initial and final test results for each year with: pass/fail, test type, date, tester's name and certification #, line pressure and test results for all three valves, repair information, test kit info and owner's signature.)

7. Standard Forms and Letters

A. Form Letter to be sent to all commercial and industrial customers
B. CCC Program Survey
C. CCC Plan Check
D. CCC Inspection Form
E. Backflow Assembly Test Form

2013 CONSUMER CONFIDENCE REPORT

The City Of Zillah
THE HEART OF WINE COUNTRY

2013 CONSUMER CONFIDENCE REPORT (CCR)

INTRODUCTION

We're pleased to present to you this year's Annual Quality Water Report. This report is designed to inform you about the quality water and services we deliver to you every day. Our constant goal is to provide you with a safe and dependable supply of drinking water. We want you to understand the efforts we make to continually improve the water treatment process and protect our water resources. We are committed to ensuring the quality of your water.

Consumer Confidence Report Translation

"Este Informe contiene informacion muy importante. Traduscalo o hable con un amigo quien lo entienda bien."

Where can I find out more information about my drinking water?

If you have any questions about this report or concerning your water utility, please contact Tim Tilley, P.W.D. at Zillah City Hall or call 829-5151. We want our valued customers to be informed about their water utility. If you want to learn more, please attend any of our regularly scheduled City Council meetings. They are held at the council chambers located at 111 7th St. Zillah. The meetings are the first and third Monday of each month at 7:00 p.m. General drinking water issues can also be directed to the following contacts:

Environmental Protection
Agency (EPA)
Safe Drinking Water Act
Hotline
(1-800-426-4791)

State Department of Health
Office of Drinking Water
16201 E. Indiana Ave., Suite 1500
Spokane Valley, WA 99216
(509) 329-2100

DESCRIPTION OF THE CITY'S WATER SYSTEM

Zillah derives its drinking water supply from groundwater wells. Wells No. 1 and 3 draw from the Ellensburg Formation aquifer. Well No. 2 draws from the Saddle Mountain Basalt aquifer. The wells pump groundwater to two storage reservoirs that provide protection against fire, power outages, and high water use periods. Water is carried from the wells and reservoirs to customers' homes through approximately 18.7 miles of water distribution pipes. Zone 2 (Alteejen area) booster pumps are operating now. The new booster pump station and reservoir on Cutler Way is also in service and operating.

Water Production / Consumption:

The City of Zillah is required to file an annual report with the Department of Health on the volume of water pumped from its sources (water produced) and the volume of water sold to its customers (water consumed). The volume of water produced and water consumed in 2012 are shown below:

Distribution System Leakage Summary:	
Total Water Produced and Purchased (TP) – Annual Volume	1,508,813 gallons
Authorized Consumption (AC) – Annual Volume	1,424,991 gallons
Distribution System Leakage – Annual Volume **TP - AC**	83,822 gallons
Distribution System Leakage – Percent **DSL = [(TP - AC) / TP] x 100**	5.6 %

The difference between production and consumption (%) is likely due in part to a water main break in the past year. The City is working toward the development of a water use efficiency program including the establishment of specific water use efficiency goals within the next one-year period to reduce the amount of water loss.

Definitions

In this table you will find many terms and abbreviations you might not be familiar with. To help you better understand these terms we've provided the following definitions:

Non-Detects (ND) - laboratory analysis indicates that the constituent is not present.

Parts per million (ppm) or Milligrams per liter (mg/l) - one part per million corresponds to one minute in two years or a single penny in $10,000.

Parts per billion (ppb) or Micrograms per liter - one part per billion corresponds to one minute in 2,000 years, or a single penny in $10,000,000.

Parts per trillion (ppt) or Nanograms per liter (nanograms/l) - one part per trillion corresponds to one minute in 2,000,000 years, or a single penny in $10,000,000,000.

Variances & Exemptions (V&E) - State or EPA permission not to meet an MCL or a treatment technique under certain conditions.

Action Level (AL) - the concentration of a contaminant which, if exceeded, triggers treatment or other requirements which a water system must follow.

Treatment Technique (TT) - (mandatory language) a treatment technique is a required process intended to reduce the level of a contaminant in drinking water.

Maximum Contaminant Level - (mandatory language) The "Maximum Allowed" (MCL) is the highest level of a contaminant that is allowed in drinking water. MCLs are set as close to the MCLGs as feasible using the best available treatment technology.

Maximum Contaminant Level Goal - (mandatory language) The "Goal" (MCLG) is the level of a contaminant in drinking water below which there is no known or expected risk to health. MCLGs allow for a margin of safety.

Water Quality Monitoring

The City of Zillah routinely monitors for constituents in your drinking water according to Federal and State laws. This table shows the results of our monitoring for the period of January 1st to December 31st, 2012. All drinking water, including bottled drinking water, may be reasonably expected to contain at

least small amounts of some constituents. It's important to remember that the presence of these constituents does not necessarily pose a health risk.

TEST RESULTS						
Contaminant	Violation Y/N	Level Detected	Unit Measurement	MCLG	MCL	Likely Source of Contamination
Microbiological Contaminants						
Total Coliform Bacteria	Yes Yes Yes	1 1 1		0	(systems that collect 40 or more samples per month) 5% of monthly samples are positive; (systems that collect fewer than 40 samples per month) 1 positive monthly sample	Commonly found in the environment (e.g., soil or vegetation) and are generally harmless. If only total coliform bacteria are detected in drinking water, the source is probably environmental. April 2012 July 2012 December 2012
Inorganic Contaminants						
Nitrate(as Nitrogen) Rainier Well = SO1 3rd Ave. Well =SO2 Wippco Well =SO3	No No No	5.95 2.40 <0.07	Mg/L Mg/L Mg/L	10	10	Runoff from fertilizer use; leaching from septic tanks, sewage; erosion of natural deposits

Radionuclides Contaminants

In September Gross Alpha, Radium 226 and Radium 228 were tested at SO3 well.
All results did not exceed the MCL.

Total Coliform Monitoring

During the month of April the Standard for the total coliform was exceeded. April's routine sample tested unsatisfactory, but the required repeat samples came back satisfactory. July's sample tests came back positive. Repeat samples were done and two came back positive. Samples were done again and all came back satisfactory. A letter about our water system was mailed out to consumers explaining the incident. December's routine water sample tested unsatisfactory. Repeat samples were done and all came back satisfactory.

Total Coliform: The Total Coliform Rule requires water systems to meet a stricter limit for coliform bacteria. Coliform bacteria are usually harmless, but their presence in water can be an indication of disease-causing bacteria. When coliform bacteria are found, special follow-up tests are done to determine if harmful bacteria are present in the water supply. If this limit is exceeded, the water supplier must notify the public by newspaper, television or radio.

Nitrate Monitoring

Nitrate in drinking water at levels above 10 ppm is a health risk for infants of less than six months of age. High nitrate levels in drinking water can cause blue baby syndrome. Nitrate levels may rise quickly for short periods of time because of rainfall or agricultural activity. If you are caring for an infant you should ask advice from your health care provider.

Nitrates: As a precaution we always notify physicians and health care providers in this area if there is ever a higher than normal level of nitrates in the water supply.

Radionuclide Monitoring

Beta/photon emitters. Certain minerals are radioactive and may emit forms of radiation known as photons and beta radiation. Some people who drink water containing beta and photon emitters in excess of the MCL over many years may have an increased risk of getting cancer.

Alpha emitters. Certain minerals are radioactive and may emit a form of radiation known as alpha radiation. Some people who drink water containing alpha emitters in excess of the MCL over many years may have an increased risk of getting cancer.

All drinking water, including bottled water, may reasonably be expected to contain at least small amounts of some contaminants. The presence of contaminants does not necessarily indicate that the water poses a health risk. More information about contaminants and potential health effects can be obtained by calling the Environmental Protection Agency's Safe Drinking Water Hotline at 1-800-426-4791.

GENERAL HEALTH EFFECTS INFORMATION

Some people may be more vulnerable to contaminants in drinking water than the general population. Immune-compromised persons such as persons with cancer undergoing chemotherapy, persons who have undergone organ transplants, people with HIV/AIDS or other immune system disorders, some elderly, and infants can be particularly at risk from infections. These people should seek advice about drinking water from their health care providers. EPA/CDC guidelines on appropriate means to lessen the risk of infection by cryptosporidium and other microbiological contaminants are available from the Safe Drinking Water Hotline
(800-426-4791).

We at the City of Zillah also work around the clock to provide top quality water to every tap. We ask that all our customers help us protect our water sources, which are the heart of our community, our way of life and our children's future.

"CONSERVATION EDUCATION"

Education

- Every day in the United States, we drink about 110 million gallons of water.
- Showering and bathing are the largest indoor uses (27%) of water domestically
- The average American uses 140-170 gallons of water per day.
- If every household in America had a faucet that dripped once each second, 928 million gallons of water a day would leak away.
- One flush of the toilet uses 6 ½ gallons of water.

The following link is a great place for kids of all ages to learn more about Water Conservation:
www.mwdh2o.com/mwdh2o/pages/education/h2o/h2o.html

1. Run your clothes washer and dishwasher only when they are full. You can save up to 1,000 gallons a month.
2. If your shower fills a one-gallon bucket in less than 20 seconds, replace the showerhead with a water-efficient model.
3. We're more likely to notice leaks indoors, but don't forget to check outdoor faucets, sprinklers and hoses for leaks.
4. When buying new appliances, consider those that offer cycle and load size adjustments. They're more water and energy efficient.
5. Upgrade older toilets with water efficient models.
6. When cleaning out fish tanks, give the nutrient-rich water to your plants.
7. Put food coloring in your toilet tank. If it seeps into the toilet bowl without flushing, you have a leak. Fixing it can save up to 1,000 gallons a month.
8. Collect water from your roof to water your garden.
9. If your toilet flapper doesn't close after flushing, replace it.
10. If your toilet was installed before 1992, reduce the amount of water used for each flush by inserting a displacement device in the tank.

More Information

Approximately 1 million miles of pipelines and aqueducts carry water in the U.S. & Canada. That's enough pipe to circle the earth 40 times.

WATER QUALITY MONITORING REPORT

Water Quality Monitoring Schedule

System: ZILLAH, CITY OF
Contact: Tim Tilley

PWS ID: 99800 W
Group: A - Comm

Region: EASTERN
County: YAKIMA

NOTE: To receive credit for compliance samples, you must fill out laboratory and sample paperwork completely, send your samples to a laboratory accredited by Washington State to conduct the analyses, AND ensure the results are submitted to DOH Office of Drinking Water. There is often a lag time between when you collect your sample, when we credit your system with meeting the monitoring requirement, and when we generate the new monitoring requirement.

Coliform Monitoring Requirements

	Jul 2014	Aug 2014	Sep 2014	Oct 2014	Nov 2014	Dec 2014	Jan 2015	Feb 2015	Mar 2015	Apr 2015	May 2015	Jun 2015
Coliform Monitoring Population	3130	3130	3130	3130	3130	3130	3130	3130	3130	3130	3130	3130
Number of Routine Samples Required	3	3	3	3	3	3	3	3	3	3	3	3

- Collect samples from representative points throughout the distribution system.
- Collect required repeat samples following an unsatisfactory sample. In addition, collect a sample from each operating groundwater source.
- Collect no less than 5 routine samples in the month following one or more unsatisfactory samples, in accordance with your system's Coliform Monitoring Plan.
- For systems that chlorinate, record chlorine residual (measured when the coliform sample is collected) on the coliform lab slip.

Chemical Monitoring Requirements

Distribution Monitoring

Test Panel/Analyte	*# Samples Required*	*Compliance Period*	*Frequency*	*Last Sample Date*	*Next Sample Due*
Lead and Copper	10	Jan 2012 - Dec 2014	standard - 3 year	08/24/2011	***Aug 2014***

Notes on Distribution System Chemical Monitoring

For *Lead and Copper*:
- Collect samples from indoor faucets after the water has sat unused in the pipes for at least 6 hours, but no more than 12 hours.
- Flush sample faucets with cold water the evening prior to collecting the sample.
- If your sampling frequency is annual or once every 3 years, collect samples between June 1 and September 30.

Source Monitoring

- Collect 'source' chemical monitoring samples from a tap after all treatment (if any), but before entering the distribution system.
- Washington State grants monitoring waivers for various test panels or analytes. Please note that we may require some monitoring as a condition of some waivers. We have granted complete waivers for dioxin, endothal, glyphosate, diquat, and insecticides.
- If "R&C" is listed in a monitoring requirement's frequency, the requirements are based on detections which are reliably and consistently below the health standard.

Source S01	*Rainier Ave*	*Well*	*Use - Permanent*	*Susceptility - High*	
Test Panel/Analyte	*# Samples Required*	*Compliance Period*	*Frequency*	*Last Sample Date*	*Next Sample Due*
Nitrate	1	Jan 2014 - Dec 2014	R&C - 1 year	11/21/2013	***Nov 2014***
Complete Inorganic (IOC)	1	Jan 2011 - Dec 2019	waiver - 9 year	09/20/2007	Sep 2016
Volatile Organics (VOC)	1	Jan 2014 - Dec 2019	waiver - 6 year	05/26/2011	May 2017
Herbicides	1	Jan 2014 - Dec 2022	waiver - 9 year	06/22/2009	Jun 2018
Pesticides	1	Jan 2014 - Dec 2022	waiver - 9 year	06/22/2009	Jun 2018
Soil Fumigants	0	Jan 2014 - Dec 2016	waiver - 3 year	06/14/2001	
Radium 226 + 228	1	Jan 2014 - Dec 2016	standard - 3 year	08/30/2010	Apr 2015
Gross alpha	1	Jan 2014 - Dec 2016	standard - 3 year	07/03/2012	Apr 2015

Source S02	*Third Ave*	*Well*	*Use - Permanent*	*Susceptility - Moderate*	
Test Panel/Analyte	*# Samples Required*	*Compliance Period*	*Frequency*	*Last Sample Date*	*Next Sample Due*
Nitrate	1	Jan 2014 - Dec 2014	standard - 1 year	09/23/2013	***Sep 2014***
Complete Inorganic (IOC)	1	Jan 2011 - Dec 2019	waiver - 9 year	09/20/2007	Sep 2016
Volatile Organics (VOC)	1	Jan 2014 - Dec 2019	waiver - 6 year	09/23/2010	Sep 2016
Herbicides	1	Jan 2014 - Dec 2022	waiver - 9 year	06/22/2009	Jun 2018
Pesticides	1	Jan 2014 - Dec 2022	waiver - 9 year	06/22/2009	Jun 2018
Soil Fumigants	0	Jan 2014 - Dec 2016	waiver - 3 year	06/12/2001	
Gross alpha	1	Jan 2014 - Dec 2019	standard - 6 year	09/23/2010	Sep 2016
Radium 228	1	Jan 2014 - Dec 2016	standard - 3 year	09/23/2010	Sep 2016

Source S03	*WIPPCO Well*	*Well*	*Use - Permanent*	*Susceptility - Moderate*	
Test Panel/Analyte	*# Samples Required*	*Compliance Period*	*Frequency*	*Last Sample Date*	*Next Sample Due*
Nitrate	1	Jan 2014 - Dec 2014	standard - 1 year	09/23/2013	***Sep 2014***
Complete Inorganic (IOC)	1	Jan 2011 - Dec 2019	waiver - 9 year	09/20/2007	Sep 2016

Source S03	*WIPPCO Well*	*Well*	*Use - Permanent*	*Susceptility - Moderate*	
Test Panel/Analyte	*# Samples Required*	*Compliance Period*	*Frequency*	*Last Sample Date*	*Next Sample Due*
Volatile Organics (VOC)	1	Jan 2014 - Dec 2019	waiver - 6 year	04/12/2010	Apr 2016
Herbicides	1	Jan 2014 - Dec 2022	waiver - 9 year	06/22/2009	Jun 2018
Pesticides	1	Jan 2014 - Dec 2022	waiver - 9 year	06/22/2009	Jun 2018
Soil Fumigants	0	Jan 2014 - Dec 2016	waiver - 3 year	06/14/2001	
Radium 226 + 228	1	Jan 2014 - Dec 2016	standard - 3 year	09/25/2012	Jul 2015
Gross alpha	1	Jan 2014 - Dec 2016	standard - 3 year	09/25/2012	Jul 2015

Other Information

Other Reporting Schedules	Due Date
Submit Consumer Confidence Report (CCR) to customers and ODW (Community systems only):	07/01/2014
Submit CCR certification form to ODW (Community systems only):	10/01/2014
Submit Water Use Efficiency report online to ODW (Community and other municipal water systems only):	07/01/2014
Send notices of lead and copper sample results to the customers sampled:	30 days after you receive the laboratory results
Submit Certification of customer notification of lead and copper results to ODW:	90 days after end of monitoring period

Special Notes

None

Eastern Regional Water Quality Monitoring Contacts

For questions regarding chemical monitoring:	Stan Hoffman: (509) 329-2132: or Stan.Hoffman@doh.wa.gov
For questions regarding DBPs:	Russell Mau: (509) 329-2116 or russell.mau@doh.wa.gov
For questions regarding coliform bacteria and microbial issues:	Mark Steward: (509) 329-2134 or Mark.Steward@doh.wa.gov

Additional Notes

The information on this monitoring schedule is valid as of the date in the upper left corner on the first page. However, the information may change with subsequent updates in our water quality monitoring database as we receive new data or revise monitoring schedules. There is often a lag time between when you collect your sample and when we credit your system with meeting the monitoring requirement.

We have not designed this monitoring schedule to display all compliance requirements. The purpose of this schedule is to assist water systems with planning for most water quality monitoring, and to allow systems to compare their records with DOH ODW records. Please be aware that this monitoring schedule does not include constituents that require a special monitoring frequency, such as monitoring affiliated with treatment.

Any inaccuracies on this schedule will not relieve the water system owner and operator of the requirement to comply with applicable regulations.

If you have any questions about your monitoring requirements, please contact the regional office staff listed above.

COLIFORM MONITORING PLAN

Coliform Monitoring Plan for: **City of Zillah**

A. System Information

Water System Name	County	System I.D. Number
ZILLAH, CITY OF	YAKIMA	99800 W
Attach copy of current WFI		
Number of Routine Samples Required Monthly by Regulation: 3	Number of Sample Sites Needed to Represent the Distribution System: 3	

B. Routine and Repeat Sample Locations

Location/Address for <u>Routine</u> Sample Sites	Location/Address for <u>Repeat</u> Sample Sites
X1. Zillah City Hall/503 First Ave. Zillah Faucet in meeting room	1-1. Zillah City Hall/503 First Ave. 1-2. Granger Bldg./513 First Ave. 1-3. Civic Center/119 First Ave. 1-4. 408 Edson St. 1-5. City Shop/132 First Ave.
X2. City Shop/132 First Ave. Zillah Faucet on sink in shop	2-1. City Shop/132 First Ave. 2-2. R.V. Dump/130 First Ave. 2-3. Cemetery/100 First Ave. 2-4. Civic Center/119 First Ave. 2-5. Teapot/117 First Ave.
X3. 408 Edson St. Zillah Faucet in Kitchen	3-1. 408 Edson St. 3-2. 405 Edson St. 3-3 403 Leland St. 3-4. Zillah City Hall/503 First Ave. 3-5. City Shop/132 First Ave.

Repeat Sample Locations

<u>Repeat Samples:</u> In addition to the five samples above, samples from Raw Water Sources will also be taken. One sample from SO1 (Rainier Well) and one sample from SO3 (Wippco Well).

- **SO1 Rainier Well/605 Rainier Ave**
- **SO3 Wippco Well/112c Fletcher Ln.**

C. Routine Sample Rotation Schedule

Month	Routine Site(s)	Month	Routine Site(s)
January	X1, X2, X3	July	X1, X2, X3
February	X1, X2, X3	August	X1, X2, X3
March	X1, X2, X3	September	X1, X2, X3
April	X1, X2, X3	October	X1, X2, X3
May	X1, X2, X3	November	X1, X2, X3
June	X1, X2, X3	December	X1, X2, X3

D. Month Following Unsatisfactory Samples

Location/Address for <u>Routine</u> Sample Site(s) Unsatisfactory the Previous Month	Location/Address for the five <u>Routine</u> Sample Sites
X1. Zillah City Hall/503 First Ave. Zillah	1. Zillah City Hall/503 First Ave.
	2. City Shop/132 First Ave
	3. 408 Edson St.
	4. Civic Center/119 First Ave.
	5. Granger Bldg. /513 First Ave.
X2. City Shop/132 First Ave. Zillah	1. Zillah City Shop/132 First Ave.
	2. Zillah City Hall/503 First Ave.
	3. 408 Edson St.
	4. Civic Center/119 First Ave.
	5. Granger Bldg./513 First Ave.
X3. 408 Edson St. Zillah	1. 408 Edson St.
	2. City Shop/132 First Ave.
	3. Zillah City Hall/503 First Ave.
	4. Civic Center/119 First Ave.
	5. Granger Bldg. /513 First Ave.

E. Preparation Information

System Name		Date Plan Completed	Dates Modified
City of Zillah		March 2006	December 2014
Name of Plan Preparer	**Position**		**Daytime Phone #**
Tim Tilley	Water Dist. Manager 2		(509)949-0380
State Reviewer		**Date Last Review**	

F. System Map

CITY OF ZILLAH

2014 COLIFORM MONITORING PLAN MAP

N
W E
S
0 600 1200

EXIT 50
EXIT 52
EXIT 54
INTERSTATE 82
SR 22
YAKIMA VALLEY HIGHWAY
BARBEE ROAD
BUENA ROAD
OOP RD
ON ROAD
N ROAD
TOURISM
WELCOME CENTER
MADRESS LANE
WALLACE WAY
NETHERTON COURT
8" PVC
12" PVC
CHEYNE ROAD
VALLEY VIEW RD.
SANSBURY LANE
ROZA DRIVE
SVID CANAL
CUTLER WAY
JOSEPH HILL
CUTLER WAY PUMP STATION
BACKFLOW DEVICE
RESERVOIR NO. 3 (613,000 GALLONS)
MIDDLE SCHOOL
NORTHSTONE PLACE
MERCLYN LANE
McCRACKAN ST.
EDSON ST.
BARTLEY ST.
DAMOU ST.
REED STREET
SCHOOLEY RD.
ALTEEJEN RD.
E. CENTENNIAL RD.
COLLINS LN
CARLSONIA ST.
LELAND ST.
DEAN ST.
ELEMENTARY SCHOOL
FOURTH AVE.
5TH STREET
75,000 GALLON WATER TANK
ZONE 2 PUMP STATION
ELLEN DR.
WESTWIND DRIVE
BAKER DR.
MELROSE STREET
GLENWOOD DRIVE
BLOSSOM LANE
WELL NO. 2 (THIRD AVE)
WELL NO. 3 (WIPPCO)
W. FIRST AVE.
ZILLAH CEMETERY
ZILLAH WEST DR.
PARK ST.
SHELLEY PARK
THIRD AVENUE MIDDLE SCHOOL
SECOND STREET
FIRST AVENUE
WELL NO. 4 THIRD AVENUE (RAINIER)
NORTH EIGHTH STREET
VIRGINIA CT.
CONCORD
MEADOWLARK LANE
ZILLAH HEIGHTS ROAD
RED DRIVE
MORITZ ST.
SCHOOLTRUP DRIVE
E. ZILLAH DR.
783,000 GALLON STANDPIPE
CONCORD STREET
EIGHTH ST.
POLLOCK AVE
SECOND AVENUE
NOB HILL AVE
BIRCH
HIGH SCHOOL
WALNUT
ADAMS PARK
ADAMS PARK DR.
PEARSON STREET
BARTLETT AVE
MAPLE WAY
MEADE STREET
SUNSET WAY
ANN ST.
GHENAUR DR.
SHARON AVE.
LINDA STREET
KAGELY WAY
SILCOTT AVE.
KELLER DRIVE
MILES DRIVE
LOGES PARK
RAILROAD AVENUE
N. MEYERS RD.
RIVER
YAKIMA RIVER
YAKIMA VALLEY HIGHWAY (OLD S.R. 12)
TIMBER RIDGE MOUNTAIN BIKE TRAIL

LEGEND

- ZILLAH CITY LIMITS
- ZILLAH UGA BOUNDARY
- ROUTINE SAMPLE SITE
- REPEAT SAMPLE SITE

HLA
Huibregtse, Louman Associates, Inc.
Civil Engineering ◆ Land Surveying ◆ Planning
2803 River Road
Yakima, WA 98902
509.966.7000
Fax 509.965.3800
www.hlacivil.com

12-22-14 P:\Projects\2013\13033\Cwp Figures.dwg

INORGANIC CHEMICAL ANALYSIS - RAINIER WELL

Division of Environmental Health
Office of Drinking Water

View Sample Detail - WSID 99800W - ZILLAH, CITY OF	
Collect Date	9/23/2010
Lab Number	105
Lab Name	Cascade Analytical Inc - Wenatchee
Sample Number	19708
Source	01
Analyte Group	IOC-INORGANIC CONTAMINANTS
Test Panel	IOC_SHORT-INORGANIC SHORT FORM
Sample Location	605 rainier ave s01
Sample Type	Pre-Treatment / Raw

Analyte DOH Num	Analyte Name	Result Range	Result Quantity	Maximum Contaminant Level	Units	State Reporting Limit
0016	CONDUCTIVITY	EQ	611.0000	700.0000	Umhos/cm	70.0000

Records 1 - 1 of 1

Home Page | **Find Water Systems** | **Find Water Quality** | **Downloads/Reports**

DOH Home | Community and Environment | Drinking Water Home | Drinking Water Contacts
Access Local Health | Privacy Notice | Disclaimer/Copyright Information

Links to external resources are provided as a public service and do not imply endorsement by the Washington State Department of Health

Department of Health, Office of Drinking Water

Street Address:
243 Israel Road S.E. 2nd floor
Tumwater, WA 98501

Mail:
PO BOX 47822
Olympia, WA 98504-7822

Phone: (360) 236-3100

Send inquiries about DOH and its programs to the Health Consumer Assistance Office
Comments or questions regarding this Web site? Send email to Environmental Health Application Testing and Support or call 360-236-3113.

You created this PDF from an application that is not licensed to print to novaPDF printer (http://www.novapdf.com) 26/2014

Washington State Department of Health

Division of Environmental Health
Office of Drinking Water

View Sample Detail - WSID 99800W - ZILLAH, CITY OF

Collect Date	9/20/2007
Lab Number	105
Lab Name	Cascade Analytical Inc - Wenatchee
Sample Number	17628
Source	01
Analyte Group	IOC-INORGANIC CONTAMINANTS
Test Panel	IOC-COMPLETE INORGANIC ANALYSIS
Sample Location	rainier well s01

Analyte DOH Num	Analyte Name	Result Range	Result Quantity	Maximum Contaminant Level	Units	State Reporting Limit
0005	BARIUM	EQ	0.1250	2.0000	mg/L	0.4000
0014	SODIUM	EQ	30.4000		mg/L	5.0000
0015	HARDNESS	EQ	254.0000		mg/L	10.0000
0016	CONDUCTIVITY	EQ	566.0000	700.0000	Umhos/cm	70.0000
0019	FLUORIDE	EQ	0.2600	4.0000	mg/L	0.5000
0019	FLUORIDE	EQ	0.2600	2.0000	mg/L	0.5000
0020	NITRATE-N	EQ	2.4600	10.0000	mg/L	0.2000
0021	CHLORIDE	EQ	11.8000	250.0000	mg/L	20.0000
0022	SULFATE	EQ	55.9000	250.0000	mg/L	50.0000
0023	COPPER	EQ	0.0021		mg/L	0.0200
0026	TDS-TOTAL DISSOLVED SOLIDS	EQ	372.0000	500.0000	mg/L	100.0000
0161	TOTAL NITRATE/NITRITE	EQ	2.4600		mg/L	0.5000
0404	MAGNESIUM	EQ	22.0000		mg/L	0.1000
0405	CALCIUM	EQ	65.5000		mg/L	0.0500
0004	ARSENIC	LT	0.0020	0.0104	mg/L	0.0030
0006	CADMIUM	LT	0.0003	0.0050	mg/L	0.0020
0007	CHROMIUM	LT	0.0047	0.1000	mg/L	0.0200
0008	IRON	LT	0.0097	0.3000	mg/L	0.1000
0009	LEAD	LT	0.0005		mg/L	0.0010
0010	MANGANESE	LT	0.0020	0.0500	mg/L	0.0100

<< FIRST < PREV > NEXT >> LAST

Records 1 - 20 of 32

Home Page | Find Water Systems | Find Water Quality | Downloads/Reports

DOH Home | Division of Environmental Health | Drinking Water Home | Drinking Water Contacts
Access Local Health | Privacy Notice | Disclaimer/Copyright Information

Links to external resources are provided as a public service and do not imply endorsement by the Washington State Department of Health

Washington State Department of Health

Division of Environmental Health
Office of Drinking Water

View Sample Detail - WSID 99800W - ZILLAH, CITY OF

Collect Date	9/20/2007
Lab Number	105
Lab Name	Cascade Analytical Inc - Wenatchee
Sample Number	17628
Source	01
Analyte Group	IOC-INORGANIC CONTAMINANTS
Test Panel	IOC-COMPLETE INORGANIC ANALYSIS
Sample Location	rainier well s01

Analyte DOH Num	Analyte Name	Result Range	Result Quantity	Maximum Contaminant Level	Units	State Reporting Limit
0011	MERCURY	LT	0.0003	0.0020	mg/L	0.0004
0012	SELENIUM	LT	0.0050	0.0500	mg/L	0.0100
0013	SILVER	LT	0.0047	0.1000	mg/L	0.1000
0017	TURBIDITY	LT	0.2000		NTU	0.1000
0018	COLOR	LT	4.0000	15.0000	CU	15.0000
0024	ZINC	LT	0.0200	5.0000	mg/L	0.2000
0110	BERYLLIUM	LT	0.0002	0.0040	mg/L	0.0008
0111	NICKEL	LT	0.0100	0.1000	mg/L	0.1000
0112	ANTIMONY	LT	0.0050	0.0060	mg/L	0.0060
0113	THALLIUM	LT	0.0010	0.0020	mg/L	0.0020
0114	NITRITE-N	LT	0.0500	1.0000	mg/L	0.2000
0116	CYANIDE	LT	0.0100	0.2000	mg/L	0.0100

<< FIRST < PREV > NEXT >> LAST

Records 21 - 32 of 32

Home Page | Find Water Systems | Find Water Quality | Downloads/Reports

DOH Home | Division of Environmental Health | Drinking Water Home | Drinking Water Contacts
Access Local Health | Privacy Notice | Disclaimer/Copyright Information

Links to external resources are provided as a public service and do not imply endorsement by the Washington State Department of Health

Office of Drinking Water
243 Israel Road SE
P.O. Box 47849
Tumwater, WA 98501
(360) 236-3113

Send inquiries about DOH and its programs to the Health Consumer Assistance Office
Comments or questions regarding this Web site? Send mail to ODW Help Desk.

Last Update : 07/21/2006

Laucks Since 1908
Testing Laboratories, Inc.
940 South Harney St., Seattle, WA 98108 (206) 767-5060 FAX (206) 767-5063
Chemistry, Microbiology, and Technical Services

INORGANICS CHEMICALS (IOCS) REPORT FOR SAMPLE 0002189-01

System ID No.: 99800W System Name: City of Zillah
Lab Sample No.: 08167856 Date Collected: 02/03/00 DOH Source No: S01
Multiple Source Nos.: Sample Type: U Purpose: C
Date Received : 02/03/00 Date Reported: 02/28/00 Supervisor: BL
Date Digested: 02/09/00 Date Analyzed: 02/16/00 Analyst: N/A
County: Yakima Group: A
Sample Location: Rainier Well
Send Report To: City of Zillah Bill To: City of Zillah

DOH #	ANALYTES	RESULTS	UNITS	SRL	TRIGGER	MCL	METHOD/ANALYST
	* * * * * * * EPA REGULATED * * * * * * *						
4	Arsenic	ND	MG/L	0.010	0.050	0.050	EPA 200.8/HN
5	Barium	0.15	MG/L	0.10	2.0	2.0	EPA 200.7/DS
6	Cadmium	ND	MG/L	0.0020	0.0050	0.0050	EPA 200.7/DS
7	Chromium	ND	MG/L	0.010	0.10	0.10	EPA 200.7/DS
11	Mercury	ND	MG/L	0.0005	0.0020	0.0020	EPA 245.1/MO
12	Selenium	ND	MG/L	0.0050	0.050	0.050	EPA 200.8/HN
110	Beryllium	ND	MG/L	0.0030	0.0040	0.0040	EPA 200.8/HN
111	Nickel	ND	MG/L	0.040	0.10	0.10	EPA 200.8/HN
112	Antimony	ND	MG/L	0.0050	0.0060	0.0060	EPA 200.8/HN
113	Thallium	ND	MG/L	0.0020	0.0020	0.0020	EPA 200.8/HN
116	Cyanide	ND	MG/L	0.050	0.20	0.20	SM 4500CN E/SS
19	Fluoride	ND	MG/L	0.20	2.0	4.0	EPA 300.0/JP
114	Nitrite - N	NA					
20	Nitrate - N	NA					
161	Total Nitrate / Nitrite	NA					
	* * EPA REGULATED (secondary) * *						
8	Iron	ND	MG/L	0.10	0.30	0.30	EPA 200.7/DS
10	Manganese	ND	MG/L	0.010	0.050	0.050	EPA 200.7/DS
13	Silver	ND	MG/L	0.010	0.050	0.050	EPA 200.8/HN
21	Chloride	24.	MG/L	20	250	250	EPA 300.0/JP
22	Sulfate	84.	MG/L	10	250	250	EPA 300.0/JP
24	Zinc	ND	MG/L	0.20	5.0	5.0	EPA 200.7/DS
	* * * * * * * STATE REGULATED * * * * * * *						
14	Sodium	29.	MG/L	5.0			EPA 200.7/DS
15	Hardness	330	MG/L	10			SM 2340B/DS
16	Conductivity	NA					
17	Turbidity	NA					
18	Color	NA					
26	Total Dissolved Solids (TDS)	NA					
	* * * * * * * STATE UNREGULATED * * * * * * *						
9	Lead	ND	MG/L	0.0020		0.015*	EPA 200.8/HN
23	Copper	ND	MG/L	0.20		1.3*	EPA 200.8/HN
	* * * OTHER (optional) * * *						
171	Orthophosphate	NA					
172	Silica	NA					
402	Aluminum	NA					
403	Alkalinity	NA					
404	Magnesium	28.	MG/L	0.10			EPA 200.7/DS
405	Calcium	85.	MG/L	0.50			EPA 200.7/DS

NOTES:

SRL (State Reporting Level): indicates the minimum reporting level required by the Washington Department of Health (DOH).

Trigger Level: DOH Drinking water response level. Additional sampling required. Contact regional DOH office for additional information.

MCL (Maximum Contaminant Level): If the contaminant amount exceeds the MCL, contact your regional DOH office immediately.

N/A (Not analyzed)
ND (Not detected)
* These are Federal Action Levels, not MCLs

This report is submitted for the exclusive use of the person, partnership, or corporation to whom it is addressed. Subsequent use of the name of this company or any member of its staff in connection with the advertising or sale of any product or process will be granted only on contract. This company accepts no responsibility except for the due performance of inspection and/or analysis in good faith and according to the rules of the trade and of science.

Printed on Recycled Paper

Laucks Since 1908
Testing Laboratories, Inc.
940 South Harney St., Seattle, WA 98108 (206) 767-5060 FAX (206) 767-5063

Chemistry, Microbiology, and Technical Services

INORGANICS CHEMICALS (IOCS) REPORT FOR SAMPLE 0002189-01

System ID No.: 99800W System Name: City of Zillah
Lab Sample No.: 01431229 Date Collected: 02/03/00 DOH Source No: S01
Multiple Source Nos.: _____ Sample Type: U Purpose: C
Date Received : 02/03/00 Date Reported: 02/28/00 Supervisor: BL
Date Digested: _____ Date Analyzed: 02/04/00 Analyst: N/A
County: Yakima Group: A
Sample Location: Rainier Well
Send Report To: City of Zillah Bill To: City of Zillah

DOH #	ANALYTES	RESULTS	UNITS	SRL	TRIGGER	MCL	METHOD/ANALYST
	* * * * * * * EPA REGULATED * * * * * * *						
4	Arsenic	NA					
5	Barium	NA					
6	Cadmium	NA					
7	Chromium	NA					
11	Mercury	NA					
12	Selenium	NA					
110	Beryllium	NA					
111	Nickel	NA					
112	Antimony	NA					
113	Thallium	NA					
116	Cyanide	NA					
19	Fluoride	NA					
114	Nitrite - N	ND	MG/L	0.50	0.50	1.0	EPA 354.1/SS
20	Nitrate - N	6.9+	MG/L	0.50	5.0	10	EPA 353.2/SS
161	Total Nitrate / Nitrite	6.9	MG/L	0.50	5.0	10	
	* * EPA REGULATED (secondary) * *						
8	Iron	NA					
10	Manganese	NA					
13	Silver	NA					
21	Chloride	NA					
22	Sulfate	NA					
24	Zinc	NA					
	* * * * * * * STATE REGULATED * * * * * * *						
14	Sodium	NA					
15	Hardness	NA					
16	Conductivity	690.	UMHOS/C	10	700	700	SM 2510B/KB
17	Turbidity	0.12	NTU	0.10	1.0	1.0	SM 2130B/GN
18	Color	ND	COLOR	5.0	15	15	SM 2120B/GN
26	Total Dissolved Solids (TDS)	NA.					
	* * * * * * * STATE UNREGULATED * * * * * * *						
9	Lead	NA					
23	Copper	NA					
	* * * OTHER (optional) * * *						
171	Orthophosphate	NA					
172	Silica	NA					
402	Aluminum	NA					
403	Alkalinity	NA					
404	Magnesium	NA					
405	Calcium	NA					

NOTES:

SRL (State Reporting Level): indicates the minimum reporting level required by the Washington Department of Health (DOH).

Trigger Level: DOH Drinking water response level. Additional sampling required. Contact regional DOH office for additional information.

MCL (Maximum Contaminant Level): If the contaminant amount exceeds the MCL, contact your regional DOH office immediately.

N/A (Not analyzed)
ND (Not detected) + Contaminant amount exceeds the trigger amount.
* These are Federal Action Levels, not MCLs

This report is submitted for the exclusive use of the person, partnership, or corporation to whom it is addressed. Subsequent use of the name of this company or any member of its staff in connection with the advertising or sale of any product or process will be granted only on contract. This company accepts no responsibility except for the due performance of inspection and/or analysis in good faith and according to the rules of the trade and of science.

INORGANIC CHEMICAL ANALYSIS - 3RD AVENUE WELL

Washington State Department of Health

Division of Environmental Health
Office of Drinking Water

Help

View Sample Detail - WSID 99800W - ZILLAH, CITY OF

Collect Date	9/23/2010
Lab Number	105
Lab Name	Cascade Analytical Inc - Wenatchee
Sample Number	20094
Source	02
Analyte Group	IOC-INORGANIC CONTAMINANTS
Test Panel	IOC_SHORT-INORGANIC SHORT FORM
Sample Location	s02 third ave
Sample Type	Pre-Treatment / Raw

Analyte DOH Num	Analyte Name	Result Range	Result Quantity	Maximum Contaminant Level	Units	State Reporting Limit
0010	MANGANESE	EQ	0.0721	0.0500	mg/L	0.0100

Records 1 - 1 of 1

Links to external resources are provided as a public service and do not imply endorsement by the Washington State Department of Health

Department of Health, Office of Drinking Water

Street Address:
243 Israel Road S.E. 2nd floor
Tumwater, WA 98501

Mail:
PO BOX 47822
Olympia, WA 98504-7822

Phone: (360) 236-3100

Send inquiries about DOH and its programs to the Health Consumer Assistance Office
Comments or questions regarding this Web site? Send email to Environmental Health Application Testing and Support or call 360-236-3113.

Washington State Department of Health

Division of Environmental Health
Office of Drinking Water

View Sample Detail - WSID 99800W - ZILLAH, CITY OF

Collect Date	9/20/2007
Lab Number	105
Lab Name	Cascade Analytical Inc - Wenatchee
Sample Number	17626
Source	02
Analyte Group	IOC-INORGANIC CONTAMINANTS
Test Panel	IOC-COMPLETE INORGANIC ANALYSIS
Sample Location	3rd ave well s02

Analyte DOH Num	Analyte Name	Result Range	Result Quantity	Maximum Contaminant Level	Units	State Reporting Limit
0010	MANGANESE	EQ	0.0825	0.0500	mg/L	0.0100
0005	BARIUM	EQ	0.0550	2.0000	mg/L	0.4000
0008	IRON	EQ	0.0670	0.3000	mg/L	0.1000
0009	LEAD	EQ	0.0006		mg/L	0.0010
0014	SODIUM	EQ	24.2000		mg/L	5.0000
0015	HARDNESS	EQ	63.7000		mg/L	10.0000
0016	CONDUCTIVITY	EQ	225.0000	700.0000	Umhos/cm	70.0000
0017	TURBIDITY	EQ	0.8000		NTU	0.1000
0019	FLUORIDE	EQ	0.4900	4.0000	mg/L	0.5000
0019	FLUORIDE	EQ	0.4900	2.0000	mg/L	0.5000
0021	CHLORIDE	EQ	3.8600	250.0000	mg/L	20.0000
0022	SULFATE	EQ	9.4300	250.0000	mg/L	50.0000
0023	COPPER	EQ	0.0027		mg/L	0.0200
0024	ZINC	EQ	0.0630	5.0000	mg/L	0.2000
0026	TDS-TOTAL DISSOLVED SOLIDS	EQ	162.0000	500.0000	mg/L	100.0000
0404	MAGNESIUM	EQ	4.8000		mg/L	0.1000
0405	CALCIUM	EQ	17.6000		mg/L	0.0500
0004	ARSENIC	LT	0.0020	0.0104	mg/L	0.0030
0006	CADMIUM	LT	0.0003	0.0050	mg/L	0.0020
0007	CHROMIUM	LT	0.0047	0.1000	mg/L	0.0200

<< FIRST < PREV > NEXT >> LAST

Records 1 - 20 of 32

Links to external resources are provided as a public service and do not imply endorsement by the Washington State Department of Health

Washington State Department of Health

Division of Environmental Health
Office of Drinking Water

View Sample Detail - WSID 99800W - ZILLAH, CITY OF

Collect Date	9/20/2007
Lab Number	105
Lab Name	Cascade Analytical Inc - Wenatchee
Sample Number	17626
Source	02
Analyte Group	IOC-INORGANIC CONTAMINANTS
Test Panel	IOC-COMPLETE INORGANIC ANALYSIS
Sample Location	3rd ave well s02

Analyte DOH Num	Analyte Name	Result Range	Result Quantity	Maximum Contaminant Level	Units	State Reporting Limit
0011	MERCURY	LT	0.0003	0.0020	mg/L	0.0004
0012	SELENIUM	LT	0.0050	0.0500	mg/L	0.0100
0013	SILVER	LT	0.0047	0.1000	mg/L	0.1000
0018	COLOR	LT	4.0000	15.0000	CU	15.0000
0020	NITRATE-N	LT	0.0500	10.0000	mg/L	0.2000
0110	BERYLLIUM	LT	0.0002	0.0040	mg/L	0.0008
0111	NICKEL	LT	0.0100	0.1000	mg/L	0.1000
0112	ANTIMONY	LT	0.0050	0.0060	mg/L	0.0060
0113	THALLIUM	LT	0.0010	0.0020	mg/L	0.0020
0114	NITRITE-N	LT	0.0500	1.0000	mg/L	0.2000
0116	CYANIDE	LT	0.0100	0.2000	mg/L	0.0100
0161	TOTAL NITRATE/NITRITE	LT	0.5000		mg/L	0.5000

<< FIRST < PREV > NEXT >> LAST

Records 21 - 32 of 32

Links to external resources are provided as a public service and do not imply endorsement by the Washington State Department of Health

Office of Drinking Water
243 Israel Road SE
P.O. Box 47849
Tumwater, WA 98501
(360) 236-3113

Send inquiries about DOH and its programs to the Health Consumer Assistance Office
Comments or questions regarding this Web site? Send mail to ODW Help Desk.

Last Update : 07/21/2006

Laucks Since 1908
Testing Laboratories, Inc.
940 South Harney St., Seattle, WA 98108 (206) 767-5060 FAX (206) 767-5063

Chemistry, Microbiology, and Technical Services

INORGANICS CHEMICALS (IOCS) REPORT FOR SAMPLE 0002189-02

System ID No.: 99800W System Name: City of Zillah
Lab Sample No.: 08167858 Date Collected: 02/03/00 DOH Source No: S02
Multiple Source Nos.: Sample Type: U Purpose: C
Date Received : 02/03/00 Date Reported: 02/28/00 Supervisor: BL
Date Digested: 02/09/00 Date Analyzed: 02/16/00 Analyst: N/A
County: Yakima Group: A
Sample Location: 3rd Ave
Send Report To: City of Zillah Bill To: City of Zillah

DOH #	ANALYTES	RESULTS	UNITS	SRL	TRIGGER	MCL	METHOD/ANALYST
	* * * * * * * EPA REGULATED * * * * * * *						
4	Arsenic	ND	MG/L	0.010	0.050	0.050	EPA 200.8/HN
5	Barium	ND	MG/L	0.10	2.0	2.0	EPA 200.7/DS
6	Cadmium	ND	MG/L	0.0020	0.0050	0.0050	EPA 200.7/DS
7	Chromium	ND	MG/L	0.010	0.10	0.10	EPA 200.7/DS
11	Mercury	ND	MG/L	0.0005	0.0020	0.0020	EPA 245.1/MO
12	Selenium	ND	MG/L	0.0050	0.050	0.050	EPA 200.8/HN
110	Beryllium	ND	MG/L	0.0030	0.0040	0.0040	EPA 200.8/HN
111	Nickel	ND	MG/L	0.040	0.10	0.10	EPA 200.8/HN
112	Antimony	ND	MG/L	0.0050	0.0060	0.0060	EPA 200.8/HN
113	Thallium	ND	MG/L	0.0020	0.0020	0.0020	EPA 200.8/HN
116	Cyanide	ND	MG/L	0.050	0.20	0.20	SM 4500CN E/SS
19	Fluoride	0.3	MG/L	0.20	2.0	4.0	EPA 300.0/JP
114	Nitrite - N	NA					
20	Nitrate - N	NA					
161	Total Nitrate / Nitrite	NA					
	* * EPA REGULATED (secondary) * *						
8	Iron	0.20	MG/L	0.10	0.30	0.30	EPA 200.7/DS
10	Manganese	0.087**	MG/L	0.010	0.050	0.050	EPA 200.7/DS
13	Silver	ND	MG/L	0.010	0.050	0.050	EPA 200.8/HN
21	Chloride	ND	MG/L	20	250	250	EPA 300.0/JP
22	Sulfate	ND	MG/L	10	250	250	EPA 300.0/JP
24	Zinc	ND	MG/L	0.20	5.0	5.0	EPA 200.7/DS
	* * * * * * * STATE REGULATED * * * * * * *						
14	Sodium	23.	MG/L	5.0			EPA 200.7/DS
15	Hardness	64	MG/L	10			SM 2340B/DS
16	Conductivity	NA					
17	Turbidity	NA					
18	Color	NA					
26	Total Dissolved Solids (TDS)	NA					
	* * * * * * * STATE UNREGULATED * * * * * * *						
9	Lead	ND	MG/L	0.0020		0.015*	EPA 200.8/HN
23	Copper	ND	MG/L	0.20		1.3*	EPA 200.8/HN
	* * * OTHER (optional) * * *						
171	Orthophosphate	NA					
172	Silica	NA					
402	Aluminum	NA					
403	Alkalinity	NA					
404	Magnesium	4.7	MG/L	0.10			EPA 200.7/DS
405	Calcium	18.	MG/L	0.50			EPA 200.7/DS

NOTES:

SRL (State Reporting Level): indicates the minimum reporting level required by the Washington Department of Health (DOH).

Trigger Level: DOH Drinking water response level. Additional sampling required. Contact regional DOH office for additional information.

MCL (Maximum Contaminant Level): If the contaminant amount exceeds the MCL, contact your regional DOH office immediately.

N/A (Not analyzed) ** Contaminant amount exceeds the MCL

ND (Not detected)

* These are Federal Action Levels, not MCLs

This report is submitted for the exclusive use of the person, partnership, or corporation to whom it is addressed. Subsequent use of the name of this company or any member of its staff in connection with the advertising or sale of any product or process will be granted only on contract. This company accepts no responsibility except for the due performance of inspection and/or analysis in good faith and according to the rules of the trade and of science.

Printed on Recycled Paper

Laucks Since 1908
Testing Laboratories, Inc.
940 South Harney St., Seattle, WA 98108 (206) 767-5060 FAX (206) 767-5063

Chemistry, Microbiology, and Technical Services

INORGANICS CHEMICALS (IOCS) REPORT FOR SAMPLE 0002189-02

System ID No.: 99800W System Name: City of Zillah
Lab Sample No.: 01431230 Date Collected: 02/03/00 DOH Source No: S02
Multiple Source Nos.: _____ Sample Type: U Purpose: C
Date Received : 02/03/00 Date Reported: 02/28/00 Supervisor: BL
Date Digested: _____ Date Analyzed: 02/04/00 Analyst: N/A
County: Yakima Group: A
Sample Location: 3rd Ave
Send Report To: City of Zillah Bill To: City of Zillah

DOH #	ANALYTES	RESULTS	UNITS	SRL	TRIGGER	MCL	METHOD/ANALYST
	* * * * * * * EPA REGULATED * * * * * * *						
4	Arsenic	NA					
5	Barium	NA					
6	Cadmium	NA					
7	Chromium	NA					
11	Mercury	NA					
12	Selenium	NA					
110	Beryllium	NA					
111	Nickel	NA					
112	Antimony	NA					
113	Thallium	NA					
116	Cyanide	NA					
19	Fluoride	NA					
114	Nitrite - N	ND	MG/L	0.50	0.50	1.0	EPA 354.1/SS
20	Nitrate - N	ND	MG/L	0.50	5.0	10	EPA 353.2/SS
161	Total Nitrate / Nitrite	ND	MG/L	0.50	5.0	10	
	* * EPA REGULATED (secondary) * *						
8	Iron	NA					
10	Manganese	NA					
13	Silver	NA					
21	Chloride	NA					
22	Sulfate	NA					
24	Zinc	NA					
	* * * * * * * STATE REGULATED * * * * * * *						
14	Sodium	NA					
15	Hardness	NA					
16	Conductivity	230.	UMHOS/C	10	700	700	SM 2510B/KB
17	Turbidity	1.8**	NTU	0.10	1.0	1.0	SM 2130B/GN
18	Color	ND	COLOR	5.0	15	15	SM 2120B/GN
26	Total Dissolved Solids (TDS)	NA.					
	* * * * * * * STATE UNREGULATED * * * * * * *						
9	Lead	NA					
23	Copper	NA					
	* * * OTHER (optional) * * *						
171	Orthophosphate	NA					
172	Silica	NA					
402	Aluminum	NA					
403	Alkalinity	NA					
404	Magnesium	NA					
405	Calcium	NA					

NOTES:

SRL (State Reporting Level): indicates the minimum reporting level required by the Washington Department of Health (DOH).

Trigger Level: DOH Drinking water response level. Additional sampling required. Contact regional DOH office for additional information.

MCL (Maximum Contaminant Level): If the contaminant amount exceeds the MCL, contact your regional DOH office immediately.

N/A (Not analyzed) ** Contaminant amount exceeds the MCL

ND (Not detected)

* These are Federal Action Levels, not MCLs

This report is submitted for the exclusive use of the person, partnership, or corporation to whom it is addressed. Subsequent use of the name of this company or any member of its staff in connection with the advertising or sale of any product or process will be granted only on contract. This company accepts no responsibility except for the due performance of inspection and/or analysis in good faith and according to the rules of the trade and of science.

INORGANIC CHEMICAL ANALYSIS - WIPPCO WELL

Division of Environmental Health
Office of Drinking Water

View Sample Detail - WSID 99800W - ZILLAH, CITY OF

Collect Date	9/23/2010
Lab Number	105
Lab Name	Cascade Analytical Inc - Wenatchee
Sample Number	20096
Source	03
Analyte Group	IOC-INORGANIC CONTAMINANTS
Test Panel	IOC_SHORT-INORGANIC SHORT FORM
Sample Location	wippco well s03
Sample Type	Pre-Treatment / Raw

Analyte DOH Num	Analyte Name	Result Range	Result Quantity	Maximum Contaminant Level	Units	State Reporting Limit
0008	IRON	LT	0.0097	0.3000	mg/L	0.1000

Records 1 - 1 of 1

Home Page | **Find Water Systems** | **Find Water Quality** | **Downloads/Reports**

DOH Home | Community and Environment | Drinking Water Home | Drinking Water Contacts
Access Local Health | Privacy Notice | Disclaimer/Copyright Information

Links to external resources are provided as a public service and do not imply endorsement by the Washington State Department of Health

Department of Health, Office of Drinking Water

Street Address:
243 Israel Road S.E. 2nd floor
Tumwater, WA 98501

Mail:
PO BOX 47822
Olympia, WA 98504-7822

Phone: (360) 236-3100

Send inquiries about DOH and its programs to the Health Consumer Assistance Office
Comments or questions regarding this Web site? Send email to Environmental Health Application Testing and Support or call 360-236-3113.

You created this PDF from an application that is not licensed to print to novaPDF printer (http://www.novapdf.com) 26/2014

Washington State Department of Health

Division of Environmental Health
Office of Drinking Water

View Sample Detail - WSID 99800W - ZILLAH, CITY OF

Collect Date	9/20/2007
Lab Number	105
Lab Name	Cascade Analytical Inc - Wenatchee
Sample Number	17627
Source	03
Analyte Group	IOC-INORGANIC CONTAMINANTS
Test Panel	IOC-COMPLETE INORGANIC ANALYSIS
Sample Location	wippco well s03

Analyte DOH Num	Analyte Name	Result Range	Result Quantity	Maximum Contaminant Level	Units	State Reporting Limit
0005	BARIUM	EQ	0.1200	2.0000	mg/L	0.4000
0008	IRON	EQ	0.0175	0.3000	mg/L	0.1000
0014	SODIUM	EQ	28.0000		mg/L	5.0000
0015	HARDNESS	EQ	240.0000		mg/L	10.0000
0016	CONDUCTIVITY	EQ	565.0000	700.0000	Umhos/cm	70.0000
0019	FLUORIDE	EQ	0.2600	4.0000	mg/L	0.5000
0019	FLUORIDE	EQ	0.2600	2.0000	mg/L	0.5000
0020	NITRATE-N	EQ	2.4800	10.0000	mg/L	0.2000
0021	CHLORIDE	EQ	11.9000	250.0000	mg/L	20.0000
0022	SULFATE	EQ	55.6000	250.0000	mg/L	50.0000
0026	TDS-TOTAL DISSOLVED SOLIDS	EQ	370.0000	500.0000	mg/L	100.0000
0161	TOTAL NITRATE/NITRITE	EQ	2.4800		mg/L	0.5000
0404	MAGNESIUM	EQ	20.6000		mg/L	0.1000
0405	CALCIUM	EQ	62.0000		mg/L	0.0500
0004	ARSENIC	LT	0.0020	0.0104	mg/L	0.0030
0006	CADMIUM	LT	0.0003	0.0050	mg/L	0.0020
0007	CHROMIUM	LT	0.0047	0.1000	mg/L	0.0200
0009	LEAD	LT	0.0005		mg/L	0.0010
0010	MANGANESE	LT	0.0020	0.0500	mg/L	0.0100
0011	MERCURY	LT	0.0003	0.0020	mg/L	0.0004

<< FIRST < PREV > NEXT >> LAST

Records 1 - 20 of 32

Home Page | Find Water Systems | Find Water Quality | Downloads/Reports

DOH Home | Division of Environmental Health | Drinking Water Home | Drinking Water Contacts
Access Local Health | Privacy Notice | Disclaimer/Copyright Information

Links to external resources are provided as a public service and do not imply endorsement by the Washington State Department of Health

Washington State Department of Health

Division of Environmental Health
Office of Drinking Water

View Sample Detail - WSID 99800W - ZILLAH, CITY OF

Collect Date	9/20/2007
Lab Number	105
Lab Name	Cascade Analytical Inc - Wenatchee
Sample Number	17627
Source	03
Analyte Group	IOC-INORGANIC CONTAMINANTS
Test Panel	IOC-COMPLETE INORGANIC ANALYSIS
Sample Location	wippco well s03

Analyte DOH Num	Analyte Name	Result Range	Result Quantity	Maximum Contaminant Level	Units	State Reporting Limit
0012	SELENIUM	LT	0.0050	0.0500	mg/L	0.0100
0013	SILVER	LT	0.0047	0.1000	mg/L	0.1000
0017	TURBIDITY	LT	0.2000		NTU	0.1000
0018	COLOR	LT	4.0000	15.0000	CU	15.0000
0023	COPPER	LT	0.0020		mg/L	0.0200
0024	ZINC	LT	0.0200	5.0000	mg/L	0.2000
0110	BERYLLIUM	LT	0.0002	0.0040	mg/L	0.0008
0111	NICKEL	LT	0.0100	0.1000	mg/L	0.1000
0112	ANTIMONY	LT	0.0050	0.0060	mg/L	0.0060
0113	THALLIUM	LT	0.0010	0.0020	mg/L	0.0020
0114	NITRITE-N	LT	0.0500	1.0000	mg/L	0.2000
0116	CYANIDE	LT	0.0100	0.2000	mg/L	0.0100

<< FIRST < PREV > NEXT >> LAST

Records 21 - 32 of 32

Home Page | Find Water Systems | Find Water Quality | Downloads/Reports

DOH Home | Division of Environmental Health | Drinking Water Home | Drinking Water Contacts
Access Local Health | Privacy Notice | Disclaimer/Copyright Information

Links to external resources are provided as a public service and do not imply endorsement by the Washington State Department of Health

Office of Drinking Water
243 Israel Road SE
P.O. Box 47849
Tumwater, WA 98501
(360) 236-3113

Send inquiries about DOH and its programs to the Health Consumer Assistance Office
Comments or questions regarding this Web site? Send mail to ODW Help Desk.

Last Update : 07/21/2006

Laucks Since 1908
Testing Laboratories, Inc.
940 South Harney St., Seattle, WA 98108 (206) 767-5060 FAX (206) 767-5063
Chemistry, Microbiology, and Technical Services

INORGANICS CHEMICALS (IOCS) REPORT FOR SAMPLE 0002189-03

System ID No.: 99800W System Name: City of Zillah
Lab Sample No.: 08167860 Date Collected: 02/03/00 DOH Source No: S03
Multiple Source Nos.: Sample Type: U Purpose: C
Date Received : 02/03/00 Date Reported: 02/28/00 Supervisor: BL
Date Digested: 02/09/00 Date Analyzed: 02/16/00 Analyst: N/A
County: Yakima Group: A
Sample Location: Wippco Well
Send Report To: City of Zillah Bill To: City of Zillah

DOH #	ANALYTES	RESULTS	UNITS	SRL	TRIGGER	MCL	METHOD/ANALYST
	* * * * * * * EPA REGULATED * * * * * * *						
4	Arsenic	ND	MG/L	0.010	0.050	0.050	EPA 200.8/HN
5	Barium	0.13	MG/L	0.10	2.0	2.0	EPA 200.7/DS
6	Cadmium	ND	MG/L	0.0020	0.0050	0.0050	EPA 200.7/DS
7	Chromium	ND	MG/L	0.010	0.10	0.10	EPA 200.7/DS
11	Mercury	ND	MG/L	0.0005	0.0020	0.0020	EPA 245.1/MO
12	Selenium	ND	MG/L	0.0050	0.050	0.050	EPA 200.8/HN
110	Beryllium	ND	MG/L	0.0030	0.0040	0.0040	EPA 200.8/HN
111	Nickel	ND	MG/L	0.040	0.10	0.10	EPA 200.8/HN
112	Antimony	ND	MG/L	0.0050	0.0060	0.0060	EPA 200.8/HN
113	Thallium	ND	MG/L	0.0020	0.0020	0.0020	EPA 200.8/HN
116	Cyanide	ND	MG/L	0.050	0.20	0.20	SM 4500CN E/SS
19	Fluoride	ND	MG/L	0.20	2.0	4.0	EPA 300.0/JP
114	Nitrite - N	NA					
20	Nitrate - N	NA					
161	Total Nitrate / Nitrite	NA					
	* * EPA REGULATED (secondary) * *						
8	Iron	0.19	MG/L	0.10	0.30	0.30	EPA 200.7/DS
10	Manganese	ND	MG/L	0.010	0.050	0.050	EPA 200.7/DS
13	Silver	ND	MG/L	0.010	0.050	0.050	EPA 200.8/HN
21	Chloride	ND	MG/L	20	250	250	EPA 300.0/JP
22	Sulfate	69.	MG/L	10	250	250	EPA 300.0/JP
24	Zinc	ND	MG/L	0.20	5.0	5.0	EPA 200.7/DS
	* * * * * * * STATE REGULATED * * * * * * *						
14	Sodium	28.	MG/L	5.0			EPA 200.7/DS
15	Hardness	280	MG/L	10			SM 2340B/DS
16	Conductivity	NA					
17	Turbidity	NA					
18	Color	NA					
26	Total Dissolved Solids (TDS)	NA					
	* * * * * * * STATE UNREGULATED * * * * * * *						
9	Lead	ND	MG/L	0.0020		0.015*	EPA 200.8/HN
23	Copper	ND	MG/L	0.20		1.3*	EPA 200.8/HN
	* * * OTHER (optional) * * *						
171	Orthophosphate	NA					
172	Silica	NA					
402	Aluminum	NA					
403	Alkalinity	NA					
404	Magnesium	23.	MG/L	0.10			EPA 200.7/DS
405	Calcium	73.	MG/L	0.50			EPA 200.7/DS

NOTES:

SRL (State Reporting Level): indicates the minimum reporting level required by the Washington Department of Health (DOH).

Trigger Level: DOH Drinking water response level. Additional sampling required. Contact regional DOH office for additional information.

MCL (Maximum Contaminant Level): If the contaminant amount exceeds the MCL, contact your regional DOH office immediately.

N/A (Not analyzed)
ND (Not detected)
* These are Federal Action Levels, not MCLs

This report is submitted for the exclusive use of the person, partnership, or corporation to whom it is addressed. Subsequent use of the name of this company or any member of its staff in connection with the advertising or sale of any product or process will be granted only on contract. This company accepts no responsibility except for the due performance of inspection and/or analysis in good faith and according to the rules of the trade and of science.

Laucks Since 1908
Testing Laboratories, Inc.
940 South Harney St., Seattle, WA 98108 (206) 767-5060 FAX (206) 767-5063
Chemistry, Microbiology, and Technical Services

INORGANICS CHEMICALS (IOCS) REPORT FOR SAMPLE 0002189-03

System ID No.: 99800W System Name: City of Zillah
Lab Sample No.: 01431231 Date Collected: 02/03/00 DOH Source No: S03
Multiple Source Nos.: Sample Type: U Purpose: C
Date Received : 02/03/00 Date Reported: 02/28/00 Supervisor: BL
Date Digested: Date Analyzed: 02/04/00 Analyst: N/A
County: Yakima Group: A
Sample Location: Wippco Well
Send Report To: City of Zillah Bill To: City of Zillah

DOH #	ANALYTES	RESULTS	UNITS	SRL	TRIGGER	MCL	METHOD/ANALYST
		* * * * * * * EPA REGULATED * * * * * * *					
4	Arsenic	NA					
5	Barium	NA					
6	Cadmium	NA					
7	Chromium	NA					
11	Mercury	NA					
12	Selenium	NA					
110	Beryllium	NA					
111	Nickel	NA					
112	Antimony	NA					
113	Thallium	NA					
116	Cyanide	NA					
19	Fluoride	NA					
114	Nitrite - N	ND	MG/L	0.50	0.50	1.0	EPA 354.1/SS
20	Nitrate - N	3.2	MG/L	0.50	5.0	10	EPA 353.2/SS
161	Total Nitrate / Nitrite	3.2	MG/L	0.50	5.0	10	
		* * EPA REGULATED (secondary) * *					
8	Iron	NA					
10	Manganese	NA					
13	Silver	NA					
21	Chloride	NA					
22	Sulfate	NA					
24	Zinc	NA					
		* * * * * * * STATE REGULATED * * * * * * *					
14	Sodium	NA					
15	Hardness	NA					
16	Conductivity	600.	UMHOS/C	10	700	700	SM 2510B/KB
17	Turbidity	0.96	NTU	0.10	1.0	1.0	SM 2130B/GN
18	Color	ND	COLOR	5.0	15	15	SM 2120B/GN
26	Total Dissolved Solids (TDS)	NA.					
		* * * * * * * STATE UNREGULATED * * * * * * *					
9	Lead	NA					
23	Copper	NA					
		* * * OTHER (optional) * * *					
171	Orthophosphate	NA					
172	Silica	NA					
402	Aluminum	NA					
403	Alkalinity	NA					
404	Magnesium	NA					
405	Calcium	NA					

NOTES:

SRL (State Reporting Level): indicates the minimum reporting level required by the Washington Department of Health (DOH).

Trigger Level: DOH Drinking water response level. Additional sampling required. Contact regional DOH office for additional information.

MCL (Maximum Contaminant Level): If the contaminant amount exceeds the MCL, contact your regional DOH office immediately.

N/A (Not analyzed)
ND (Not detected)
* These are Federal Action Levels, not MCLs

This report is submitted for the exclusive use of the person, partnership, or corporation to whom it is addressed. Subsequent use of the name of this company or any member of its staff in connection with the advertising or sale of any product or process will be granted only on contract. This company accepts no responsibility except for the due performance of inspection and/or analysis in good faith and according to the rules of the trade and of science.

Printed on Recycled Paper

NITRATE & NITRITE CHEMICAL ANALYSIS - RAINIER WELL

Division of Environmental Health
Office of Drinking Water

View Sample Detail - WSID 99800W - ZILLAH, CITY OF	
Collect Date	11/21/2013
Lab Number	151
Lab Name	Cascade Analytical Inc - Yakima
Sample Number	28106
Source	01
Analyte Group	IOC-INORGANIC CONTAMINANTS
Test Panel	NIT-NITRATE SUITE
Sample Location	rainier well
Sample Type	Pre-Treatment / Raw

Analyte DOH Num	Analyte Name	Result Range	Result Quantity	Maximum Contaminant Level	Units	State Reporting Limit
0020	NITRATE-N	EQ	5.0400	10.0000	mg/L	0.2000
0161	TOTAL NITRATE/NITRITE	EQ	5.0400		mg/L	0.5000
0114	NITRITE-N	LT	0.0500	1.0000	mg/L	0.2000

Records 1 - 3 of 3

Home Page | **Find Water Systems** | **Find Water Quality** | **Downloads/Reports**

DOH Home | Community and Environment | Drinking Water Home | Drinking Water Contacts
Access Local Health | Privacy Notice | Disclaimer/Copyright Information

Links to external resources are provided as a public service and do not imply endorsement by the Washington State Department of Health

Department of Health, Office of Drinking Water

Street Address:
243 Israel Road S.E. 2nd floor
Tumwater, WA 98501

Mail:
PO BOX 47822
Olympia, WA 98504-7822

Phone: (360) 236-3100

Send inquiries about DOH and its programs to the Health Consumer Assistance Office
Comments or questions regarding this Web site? Send email to Environmental Health Application Testing and Support or call 360-236-3113.

You created this PDF from an application that is not licensed to print to novaPDF printer (http://www.novapdf.com) /8/2014

Washington State Department of Health

Division of Environmental Health
Office of Drinking Water

Help

View Sample Detail - WSID 99800W - ZILLAH, CITY OF	
Collect Date	11/27/2012
Lab Number	151
Lab Name	Cascade Analytical Inc - Yakima
Sample Number	26000
Source	01
Analyte Group	IOC-INORGANIC CONTAMINANTS
Test Panel	NIT-NITRATE SUITE
Sample Location	605 rainier ave
Sample Type	Pre-Treatment / Raw

Analyte DOH Num	Analyte Name	Result Range	Result Quantity	Maximum Contaminant Level	Units	State Reporting Limit
0020	NITRATE-N	EQ	5.9500	10.0000	mg/L	0.2000
0161	TOTAL NITRATE/NITRITE	EQ	5.9500		mg/L	0.5000
0114	NITRITE-N	LT	0.0500	1.0000	mg/L	0.2000

Records 1 - 3 of 3

Links to external resources are provided as a public service and do not imply endorsement by the Washington State Department of Health

Department of Health, Office of Drinking Water

Street Address:
243 Israel Road S.E. 2nd floor
Tumwater, WA 98501

Mail:
PO BOX 47822
Olympia, WA 98504-7822

Phone: (360) 236-3100

Send inquiries about DOH and its programs to the Health Consumer Assistance Office
Comments or questions regarding this Web site? Send email to Environmental Health Application Testing and Support or call 360-236-3113.

Washington State Department of Health

Division of Environmental Health
Office of Drinking Water

Help

View Sample Detail - WSID 99800W - ZILLAH, CITY OF

Collect Date	12/7/2011
Lab Number	151
Lab Name	Cascade Analytical Inc - Yakima
Sample Number	25734
Source	01
Analyte Group	IOC-INORGANIC CONTAMINANTS
Test Panel	NIT-NITRATE SUITE
Sample Location	rainier well
Sample Type	Pre-Treatment / Raw

Analyte DOH Num	Analyte Name	Result Range	Result Quantity	Maximum Contaminant Level	Units	State Reporting Limit
0020	NITRATE-N	EQ	5.2100	10.0000	mg/L	0.2000
0161	TOTAL NITRATE/NITRITE	EQ	5.2100		mg/L	0.5000
0114	NITRITE-N	LT	0.0500	1.0000	mg/L	0.2000

Records 1 - 3 of 3

Links to external resources are provided as a public service and do not imply endorsement by the Washington State Department of Health

Department of Health, Office of Drinking Water

Street Address:
243 Israel Road S.E. 2nd floor
Tumwater, WA 98501

Mail:
PO BOX 47822
Olympia, WA 98504-7822

Phone: (360) 236-3100

Send inquiries about DOH and its programs to the Health Consumer Assistance Office
Comments or questions regarding this Web site? Send email to Environmental Health Application Testing and Support or call 360-236-3113.

Washington State Department of Health

Division of Environmental Health
Office of Drinking Water

Help

View Sample Detail - WSID 99800W - ZILLAH, CITY OF	
Collect Date	12/14/2010
Lab Number	151
Lab Name	Cascade Analytical Inc - Yakima
Sample Number	25473
Source	01
Analyte Group	IOC-INORGANIC CONTAMINANTS
Test Panel	NIT-NITRATE SUITE
Sample Location	rainier well
Sample Type	Pre-Treatment / Raw

Analyte DOH Num	Analyte Name	Result Range	Result Quantity	Maximum Contaminant Level	Units	State Reporting Limit
0020	NITRATE-N	EQ	6.0500	10.0000	mg/L	0.2000
0161	TOTAL NITRATE/NITRITE	EQ	6.0500		mg/L	0.5000
0114	NITRITE-N	LT	0.0500	1.0000	mg/L	0.2000

Records 1 - 3 of 3

Links to external resources are provided as a public service and do not imply endorsement by the Washington State Department of Health

Department of Health, Office of Drinking Water

Street Address:
243 Israel Road S.E. 2nd floor
Tumwater, WA 98501

Mail:
PO BOX 47822
Olympia, WA 98504-7822

Phone: (360) 236-3100

Send inquiries about DOH and its programs to the Health Consumer Assistance Office
Comments or questions regarding this Web site? Send email to Environmental Health Application Testing and Support or call 360-236-3113.

Washington State Department of Health

Division of Environmental Health
Office of Drinking Water

Help

View Sample Detail - WSID 99800W - ZILLAH, CITY OF	
Collect Date	10/20/2009
Lab Number	151
Lab Name	Cascade Analytical Inc - Yakima
Sample Number	20719
Source	01
Analyte Group	IOC-INORGANIC CONTAMINANTS
Test Panel	NIT-NITRATE SUITE
Sample Location	rainier well
Sample Type	Pre-Treatment / Raw

Analyte DOH Num	Analyte Name	Result Range	Result Quantity	Maximum Contaminant Level	Units	State Reporting Limit
0020	NITRATE-N	EQ	6.0200	10.0000	mg/L	0.2000
0161	TOTAL NITRATE/NITRITE	EQ	6.0200		mg/L	0.5000
0114	NITRITE-N	LT	0.1000	1.0000	mg/L	0.2000

Records 1 - 3 of 3

Links to external resources are provided as a public service and do not imply endorsement by the Washington State Department of Health

Department of Health, Office of Drinking Water

Street Address:
243 Israel Road S.E. 2nd floor
Tumwater, WA 98501

Mail:
PO BOX 47822
Olympia, WA 98504-7822

Phone: (360) 236-3100

Send inquiries about DOH and its programs to the Health Consumer Assistance Office
Comments or questions regarding this Web site? Send email to Environmental Health Application Testing and Support or call 360-236-3113.

Washington State Department of Health

Division of Environmental Health
Office of Drinking Water

Help

View Sample Detail - WSID 99800W - ZILLAH, CITY OF	
Collect Date	11/19/2008
Lab Number	151
Lab Name	Cascade Analytical Inc - Yakima
Sample Number	22793
Source	01
Analyte Group	IOC-INORGANIC CONTAMINANTS
Test Panel	NIT-NITRATE SUITE
Sample Location	rainier well
Sample Type	Pre-Treatment / Raw

DOH Num	Analyte Name	Result Range	Result Quantity	Maximum Contaminant Level	Units	State Reporting Limit
0020	NITRATE-N	EQ	6.2800	10.0000	mg/L	0.2000
0161	TOTAL NITRATE/NITRITE	EQ	6.2800		mg/L	0.5000
0114	NITRITE-N	LT	0.0500	1.0000	mg/L	0.2000

Records 1 - 3 of 3

Links to external resources are provided as a public service and do not imply endorsement by the Washington State Department of Health

Department of Health, Office of Drinking Water

Street Address:
243 Israel Road S.E. 2nd floor
Tumwater, WA 98501

Mail:
PO BOX 47822
Olympia, WA 98504-7822

Phone: (360) 236-3100

Send inquiries about DOH and its programs to the Health Consumer Assistance Office
Comments or questions regarding this Web site? Send email to Environmental Health Application Testing and Support or call 360-236-3113.

Washington State Department of Health

Division of Environmental Health
Office of Drinking Water

View Sample Detail - WSID 99800W - ZILLAH, CITY OF

Collect Date	11/13/2006
Lab Number	151
Lab Name	Cascade Analytical Inc - Yakima
Sample Number	21379
Source	01
Analyte Group	IOC-INORGANIC CONTAMINANTS
Test Panel	NIT-NITRATE SUITE
Sample Location	s01 rainier well

Analyte DOH Num	Analyte Name	Result Range	Result Quantity	Maximum Contaminant Level	Units	State Reporting Limit
0020	NITRATE-N	EQ	6.0000	10.0000	mg/L	0.2000
0161	TOTAL NITRATE/NITRITE	EQ	6.0000		mg/L	0.5000
0114	NITRITE-N	LT	0.0500	1.0000	mg/L	0.2000

Records 1 - 3 of 3

Home Page | Find Water Systems | Find Water Quality | Downloads/Reports

DOH Home | Division of Environmental Health | Drinking Water Home | Drinking Water Contacts
Access Local Health | Privacy Notice | Disclaimer/Copyright Information

Links to external resources are provided as a public service and do not imply endorsement by the Washington State Department of Health

Office of Drinking Water
243 Israel Road SE
P.O. Box 47849
Tumwater, WA 98501
(360) 236-3113

Send inquiries about DOH and its programs to the Health Consumer Assistance Office
Comments or questions regarding this Web site? Send mail to ODW Help Desk.

Last Update : 07/21/2006

Washington State Department of Health

Division of Environmental Health
Office of Drinking Water

View Sample Detail - WSID 99800W - ZILLAH, CITY OF

Collect Date	9/8/2005
Lab Number	151
Lab Name	Cascade Analytical Inc - Yakima
Sample Number	16292
Source	01
Analyte Group	IOC-INORGANIC CONTAMINANTS
Test Panel	NIT-NITRATE SUITE
Sample Location	rainier well

Analyte DOH Num	Analyte Name	Result Range	Result Quantity	Maximum Contaminant Level	Units	State Reporting Limit
0020	NITRATE-N	EQ	6.0600	10.0000	mg/L	0.2000
0161	TOTAL NITRATE/NITRITE	EQ	6.0600		mg/L	0.5000
0114	NITRITE-N	LT	0.1000	1.0000	mg/L	0.2000

Records 1 - 3 of 3

Home Page | Find Water Systems | Find Water Quality | Downloads/Reports

DOH Home | Division of Environmental Health | Drinking Water Home | Drinking Water Contacts
Access Local Health | Privacy Notice | Disclaimer/Copyright Information

Links to external resources are provided as a public service and do not imply endorsement by the Washington State Department of Health

Office of Drinking Water
243 Israel Road SE
P.O. Box 47849
Tumwater, WA 98501
(360) 236-3113

Send inquiries about DOH and its programs to the Health Consumer Assistance Office
Comments or questions regarding this Web site? Send mail to ODW Help Desk.

Last Update : 07/21/2006

Washington State Department of Health

Division of Environmental Health
Office of Drinking Water

View Sample Detail - WSID 99800W - ZILLAH, CITY OF

Collect Date	9/23/2004
Lab Number	105
Lab Name	Cascade Analytical Inc - Wenatchee
Sample Number	17158
Source	01
Analyte Group	IOC-INORGANIC CONTAMINANTS
Test Panel	NIT-NITRATE SUITE
Sample Location	rainier well

Analyte DOH Num	Analyte Name	Result Range	Result Quantity	Maximum Contaminant Level	Units	State Reporting Limit
0020	NITRATE-N	EQ	5.9600	10.0000	mg/L	0.2000
0161	TOTAL NITRATE/NITRITE	EQ	5.9600		mg/L	0.5000
0114	NITRITE-N	LT	0.0500	1.0000	mg/L	0.2000

Records 1 - 3 of 3

Home Page | Find Water Systems | Find Water Quality | Downloads/Reports

DOH Home | Division of Environmental Health | Drinking Water Home | Drinking Water Contacts
Access Local Health | Privacy Notice | Disclaimer/Copyright Information

Links to external resources are provided as a public service and do not imply endorsement by the Washington State Department of Health

Office of Drinking Water
243 Israel Road SE
P.O. Box 47849
Tumwater, WA 98501
(360) 236-3113

Send inquiries about DOH and its programs to the Health Consumer Assistance Office
Comments or questions regarding this Web site? Send mail to ODW Help Desk.

Last Update : 07/21/2006

Washington State Department of Health

Division of Environmental Health
Office of Drinking Water

View Sample Detail - WSID 99800W - ZILLAH, CITY OF

Collect Date	3/24/2004
Lab Number	105
Lab Name	Cascade Analytical Inc - Wenatchee
Sample Number	04583
Source	01
Analyte Group	IOC-INORGANIC CONTAMINANTS
Test Panel	NIT-NITRATE SUITE
Sample Location	rainier well

Analyte DOH Num	Analyte Name	Result Range	Result Quantity	Maximum Contaminant Level	Units	State Reporting Limit
0020	NITRATE-N	EQ	5.8500	10.0000	mg/L	0.2000
0161	TOTAL NITRATE/NITRITE	EQ	5.8500		mg/L	0.5000
0114	NITRITE-N	LT	0.0500	1.0000	mg/L	0.2000

Records 1 - 3 of 3

Home Page | **Find Water Systems** | **Find Water Quality** | **Downloads/Reports**

DOH Home | Division of Environmental Health | Drinking Water Home | Drinking Water Contacts
Access Local Health | Privacy Notice | Disclaimer/Copyright Information

Links to external resources are provided as a public service and do not imply endorsement by the Washington State Department of Health

Office of Drinking Water
243 Israel Road SE
P.O. Box 47849
Tumwater, WA 98501
(360) 236-3113

Send inquiries about DOH and its programs to the Health Consumer Assistance Office
Comments or questions regarding this Web site? Send mail to ODW Help Desk.

Last Update : 07/21/2006

Billing Code: 04180

#: 507701

RECEIVED SEP 12 2005

CASCADE ANALYTICAL, INC.
3019 G.S. Center Road
Wenatchee, WA 98801
(509) 662-1888
Fax: (509) 662-8183

INORGANIC CHEMICALS (IOCS) REPORT FOR NITRATES

System ID No.: 99800W	System Name: City of Zillah		
Lab/Sample No.: 15116292	Date Collected: 9/ 8/05		DOH Source No.: S01
Multiple Source Nos.:	Sample Type:		Sample Purpose: C
Date Received: 9/ 8/05	Date Reported: 9/12/05		Supervisor: Judy L. Brown
	Date Analyzed: 9/ 9/05		Analyst: Traci Jefferis
County: Yakima			Group: A X B Other
Sample Location: S01			
Send Report To: City of Zillah PO Box 475 Zillah, WA 98953		Bill To: City of Zillah PO Box 475 Zillah, WA 98953	

DOH#	ANALYTES	RESULTS	UNITS	SRL	TRIGGER	MCL	EXCEEDS		Method / Analyst	
	EPA REGULATED						Trigger?	MCL?		
114	Nitrite – N	< 0.1	mg/L	0.5	0.5	1	No	No	EPA 300.0	TJ
20	Nitrate – N	6.06	mg/L	0.5	5.0	10	Yes	No	EPA 300.0	TJ
161	Total Nitrate / Nitrite	6.06	mg/L	0.5	5.0	10	Yes	No	EPA 300.0	TJ

NOTES:

SRL (State Reporting Level): indicates the minimum reporting level required by the Washington Department of Health (DOH).

Trigger Level: DOH Drinking Water response level. Systems with compounds detected at concentrations in excess of this level are required to take additional samples. Contact your regional DOH office for further information. (509) 456-2475 ask for Scott Fink.

MCL (Maximum contaminant Level): If the contaminant amount exceeds the MCL, immediately contact your regional DOH office.

NA (Not Analyzed): in the results column indicates this compound was not included in the current analysis.

ND (Not Detected): in the results column indicates this compound was analyzed and not detected at a level greater than or equal to the SRL.

< (0.001): Means less than a number. It also indicates that the compound was ***not detected*** in the sample at or above the concentration indicates.

Comments:

Rev. 9/97

Billing Code: 04180

Ba 402273



CASCADE ANALYTICAL, INC.

3019 G.S. Center Road
Wenatchee, WA 98801
(509) 662-1888
Fax: (509) 662-8183

INORGANIC CHEMICALS (IOCS) REPORT FOR NITRATES

System ID No.: 99800W	System Name: city of Zillah		
Lab/Sample No.: 10504583	Date Collected: 3/24/04		DOH Source No.: S01
Multiple Source Nos.:	Sample Type: b		Sample Purpose: C
Date Received: 3/24/04	Date Reported: 3/25/04	Supervisor: Judy L. Brown	
	Date Analyzed: 3/24/04	Analyst: Barbara Zimmermann	
County: Yakima	Group: A X B Other		
Sample Location: Rainier Well			
Send Report To: City of Zillah PO Box 475 Zillah, WA 98953	Bill To: City of Zillah PO Box 475 Zillah, WA 98953		

DOH#	ANALYTES	RESULTS	UNITS	SRL	TRIGGER	MCL	EXCEEDS		Method / Analyst	
	EPA REGULATED						Trigger?	MCL?		
114	Nitrite – N	< 0.05	mg/L	0.5	0.5	1	No	No	EPA 300.0	BZ
20	Nitrate – N	5.85	mg/L	0.5	5.0	10	Yes	No	EPA 300.0	BZ
161	Total Nitrate / Nitrite	5.85	mg/L	0.5	5.0	10	Yes	No	EPA 300.0	BZ

NOTES:

SRL (State Reporting Level): indicates the minimum reporting level required by the Washington Department of Health (DOH).

Trigger Level: DOH Drinking Water response level. Systems with compounds detected at concentrations in excess of this level are required to take additional samples. Contact your regional DOH office for further information. (509) 456-2475 ask for Scott Fink.

MCL (Maximum contaminant Level): If the contaminant amount exceeds the MCL, immediately contact your regional DOH office.

NA (Not Analyzed): in the results column indicates this compound was not included in the current analysis.

ND (Not Detected): in the results column indicates this compound was analyzed and not detected at a level greater than or equal to the SRL.

< (0.001): Means less than a number. It also indicates that the compound was ***not detected*** in the sample at or above the concentration indicates.

Comments:

Billing Code: 04180

#: 408375



CASCADE ANALYTICAL, INC.

3019 G.S. Center Road
Wenatchee, WA 98801
(509) 662-1888
Fax: (509) 662-8183

INORGANIC CHEMICALS (IOCS) REPORT FOR NITRATES

System ID No.: 99800W	System Name: City of Zillah		
Lab/Sample No.: 10517158	Date Collected: 9/23/04	DOH Source No.: S01 Rainier Well	
Multiple Source Nos.:	Sample Type:	Sample Purpose: C	
Date Received: 9/23/04	Date Reported: 9/27/04	Supervisor: Judy L. Brown	
	Date Analyzed: 9/24/04	Analyst: Traci Jefferis	
County: Yakima	Group: A X B Other		
Sample Location:			
Send Report To: City of Zillah PO Box 475 Zillah, WA 98953	Bill To: City of Zillah PO Box 475 Zillah, WA 98953		

DOH#	ANALYTES	RESULTS	UNITS	SRL	TRIGGER	MCL	EXCEEDS		Method / Analyst	
	EPA REGULATED						Trigger?	MCL?		
114	Nitrite – N	< 0.05	mg/L	0.5	0.5	1	No	No	EPA 300.0	TJ
20	Nitrate – N	5.96	mg/L	0.5	5.0	10	Yes	No	EPA 300.0	TJ
161	Total Nitrate / Nitrite	5.96	mg/L	0.5	5.0	10	Yes	No	EPA 300.0	TJ

NOTES:

SRL (State Reporting Level): indicates the minimum reporting level required by the Washington Department of Health (DOH).

Trigger Level: DOH Drinking Water response level. Systems with compounds detected at concentrations in excess of this level are required to take additional samples. Contact your regional DOH office for further information. (509) 456-2475 ask for Scott Fink.

MCL (Maximum contaminant Level): If the contaminant amount exceeds the MCL, immediately contact your regional DOH office.

NA (Not Analyzed): in the results column indicates this compound was not included in the current analysis.

ND (Not Detected): in the results column indicates this compound was analyzed and not detected at a level greater than or equal to the SRL.

< (0.001): Means less than a number. It also indicates that the compound was ***not detected*** in the sample at or above the concentration indicates.

Comments:

Alliance Analytical Laboratories LLC
Analytical and Consulting Services

INORGANIC CHEMICALS (IOCS) REPORT
NITRATES

System ID No: 99800W	System Name: City of Zillah	
Lab/Sample No: 14901363	Date Collected: 2/6/2003	DOH Source No: S01
Multiple Source No:	Sample Type: B	Sample Purpose: C
Date Received: 2/6/2003	Date Reported: 2/18/2003	Supervisor: William R. Rice WRR
	Date Analyzed: 2/12/2003	Analyst: SKF
County: Yakima	Group: A	
Sample Location: Rainier Well		
Send Report To: City of Zillah P.O. Box 475 Zillah, WA 98953 cc: DOH	Bill To: City of Zillah P.O. Box 475 Zillah, WA 98953	

DOH #	ANALYTES	RESULTS	UNITS	SRL	TRIGGER	MCL	EXCEEDS		Method / Analyst	
	EPA REGULATED						Trigger?	MCL?		
114	Nitrite - N		mg/L	0.5	0.5	1			SM 4500-NO_2 B	
20	Nitrate - N	7.00	mg/L	0.5	5	10	Yes	No	SM 4500-NO_3 D	SKF
161	Total Nitrate / Nitrite		mg/L	0.5	5	10			Sum	

Notes:

SRL (state reporting level): Indicates the minimum reporting level required by the Washington Department of Health (DOH).

Trigger Level: DOH Drinking Water response level. Systems with analytes detected at concentrations in excess of this level are required to take additional samples. Contact your regional DOH office for further information.

MCL (maximum contaminant level): If the contaminant amount exceeds the MCL, immediately contact your regional DOH office.

NA (not analyzed): If in the results column, indicates that this analyte was not included in the current analysis.

ND (not detected): If in the results column, indicates that this analyte was analyzed and not detected at a level greater than or equal to the SRL.

< (0.001): Indicates that the analyte was not detected in the sample at or above the concentration indicated.

Comments:

.y Code: 04180

...h #: 305207

3019 G.S. Center Road
Wenatchee, WA 98801
(509) 662-1888
Fax: (509) 662-8183

CASCADE ANALYTICAL INC

RECEIVED AUG 1 5 2003

INORGANIC CHEMICALS (IOCS) REPORT FOR NITRATES

System ID No.: 99800W	System Name: City of Zillah		
Lab/Sample No.: 10511950	Date Collected: 8/13/03		DOH Source No.: S01
Multiple Source Nos.:		Sample Type: u	Sample Purpose: C
Date Received: 8/13/03	Date Reported: 8/14/03		Supervisor: Judy L. Brown
	Date Analyzed: 8/14/03		Analyst: Darlene M. Robbins
County: Yakima		Group: A X B Other	
Sample Location:			
Send Report To: City of Zillah PO Box 475 Zillah, WA 98953		Bill To: City of Zillah PO Box 475 Zillah, WA 98953	

DOH#	ANALYTES	RESULTS	UNITS	SRL	TRIGGER	MCL	EXCEEDS		Method / Analyst	
EPA REGULATED							Trigger?	MCL?		
114	Nitrite – N	< 0.07	mg/L	0.5	0.5	1	No	No	4500NO2-F	DMR
20	Nitrate – N	5.21	mg/L	0.5	5.0	10	Yes	No	4500NO3-F	DMR
161	Total Nitrate / Nitrite	5.21	mg/L	0.5	5.0	10	Yes	No	4500NO3-F	DMR

NOTES:

SRL (State Reporting Level): indicates the minimum reporting level required by the Washington Department of Health (DOH).

Trigger Level: DOH Drinking Water response level. Systems with compounds detected at concentrations in excess of this level are required to take additional samples. Contact your regional DOH office for further information. (509) 456-2475 ask for Scott Fink.

MCL (Maximum contaminant Level): If the contaminant amount exceeds the MCL, immediately contact your regional DOH office.

NA (Not Analyzed): in the results column indicates this compound was not included in the current analysis.

ND (Not Detected): in the results column indicates this compound was analyzed and not detected at a level greater than or equal to the SRL.

< (0.001): Means less than a number. It also indicates that the compound was ***not detected*** in the sample at or above the concentration indicates.

Comments:

Rev. 9/9

CASCADE ANALYTICAL, INC.
3019 G.S. Center Road
Wenatchee, WA 98801
(509) 662-1888
Fax: (509) 662-8183

RECEIVED NOV 1 9 2003

INORGANIC CHEMICALS (IOCS) REPORT FOR NITRATES

System ID No.: 99800W	System Name: City of Zillah	
Lab/Sample No.: 10521005	Date Collected: 11/17/03	DOH Source No.: S01
Multiple Source Nos.:	Sample Type: u	Sample Purpose: C
Date Received: 11/18/03	Date Reported: 11/19/03	Supervisor: Judy L. Brown
	Date Analyzed: 11/19/03	Analyst: Darlene M. Robbins
County: Yakima	Group: A X B Other	
Sample Location:		
Send Report To: City of Zillah PO Box 475 Zillah, WA 98953	Bill To: City of Zillah PO Box 475 Zillah, WA 98953	

DOH#	ANALYTES	RESULTS	UNITS	SRL	TRIGGER	MCL	EXCEEDS		Method / Analyst	
	EPA REGULATED						Trigger?	MCL?		
114	Nitrite – N	< 0.07	mg/L	0.5	0.5	1	No	No	4500NO2-F	DMR
20	Nitrate – N	6.38	mg/L	0.5	5.0	10	Yes	No	4500NO3-F	DMR
161	Total Nitrate / Nitrite	6.38	mg/L	0.5	5.0	10	Yes	No	4500NO3-F	DMR

NOTES:

SRL (State Reporting Level): indicates the minimum reporting level required by the Washington Department of Health (DOH).

Trigger Level: DOH Drinking Water response level. Systems with compounds detected at concentrations in excess of this level are required to take additional samples. Contact your regional DOH office for further information. (509) 456-2475 ask for Scott Fink.

MCL (Maximum contaminant Level): If the contaminant amount exceeds the MCL, immediately contact your regional DOH office.

NA (Not Analyzed): in the results column indicates this compound was not included in the current analysis.

ND (Not Detected): in the results column indicates this compound was analyzed and not detected at a level greater than or equal to the SRL.

< (0.001): Means less than a number. It also indicates that the compound was ***not detected*** in the sample at or above the concentration indicates.

Comments: Judy L Brown

Laucks Since 1908
Testing Laboratories, Inc.
940 South Harney St., Seattle, WA 98108 (206) 767-5060 Fax (206) 767-5063
1106 Ledwich Avenue, Yakima, WA 98902 (509) 248-4695 Fax (509) 452-1265

Chemistry, Microbiology, and Technical Services

INORGANICS CHEMICALS (IOCS) REPORT FOR SAMPLE T205110-01

System ID No.: 99800W System Name: CITY OF ZILLAH
Lab Sample No.: 01445390 Date Collected: 05/08/02 DOH Source No: S01
Multiple Source Nos.: _____ Sample Type: B Purpose: C
Date Received : 05/08/02 Date Reported: 05/20/02 Supervisor: BL
Date Digested: _____ Date Analyzed: 05/09/02 Analyst: N/A
County: YAKIMA Group: A
Sample Location: RAINIER WELL
Send Report To: City of Zillah Bill To: City of Zillah

DOH #	ANALYTES	RESULTS	UNITS	SRL	TRIGGER	MCL	METHOD/ANALYST
	* * * * * * * EPA REGULATED * * * * * * *						
4	Arsenic	NA					
5	Barium	NA					
6	Cadmium	NA					
7	Chromium	NA					
11	Mercury	NA					
12	Selenium	NA					
110	Beryllium	NA					
111	Nickel	NA					
112	Antimony	NA					
113	Thallium	NA					
116	Cyanide	NA					
19	Fluoride	NA					
114	Nitrite - N	NA					
20	Nitrate - N	5.5+	MG/L	0.50	5.0	10	SM 4500NO3D/HM
161	Total Nitrate / Nitrite	NA					
	* * EPA REGULATED (secondary) * *						
8	Iron	NA					
10	Manganese	NA					
13	Silver	NA					
21	Chloride	NA					
22	Sulfate	NA					
24	Zinc	NA					
	* * * * * * * STATE REGULATED * * * * * * *						
14	Sodium	NA					
15	Hardness	NA					
16	Conductivity	NA					
17	Turbidity	NA					
18	Color	NA					
26	Total Dissolved Solids (TDS)	NA					
	* * * * * * * STATE UNREGULATED * * * * * * *						
9	Lead	NA					
23	Copper	NA					
	* * * OTHER (optional) * * *						
171	Orthophosphate	NA					
172	Silica	NA					
402	Aluminum	NA					
403	Alkalinity	NA					
404	Magnesium	NA					
405	Calcium	NA					

NOTES:

SRL (State Reporting Level): indicates the minimum reporting level required by the Washington Department of Health (DOH).
Trigger Level: DOH Drinking water response level. Additional sampling required. Contact regional DOH office for additional information.
MCL (Maximum Contaminant Level): If the contaminant amount exceeds the MCL, contact your regional DOH office immediately.
N/A (Not analyzed)
ND (Not detected) + Contaminant amount exceeds the trigger amount.
* These are Federal Action Levels, not MCLs

This report is submitted for the exclusive use of the person, partnership, or corporation to whom it is addressed. Subsequent use of the name of this company or any member of its staff in connection with the advertising or sale of any product or process will be granted only on contract. This company accepts no responsibility except for the due performance of inspection and/or analysis in good faith and according to the rules of the trade and of science.

Laucks Since 1908
Testing Laboratories, Inc.
940 South Harney St., Seattle, WA 98108 (206) 767-5060 FAX (206) 767-5063
Chemistry, Microbiology, and Technical Services

INORGANICS CHEMICALS (IOCS) REPORT FOR SAMPLE T001013-03

System ID No.: 99800W System Name: CITY OF ZILLAH
Lab Sample No.: 01430856 Date Collected: 01/03/00 DOH Source No: SO1
Multiple Source Nos.: _____ Sample Type: B Purpose: C
Date Received : 01/03/00 Date Reported: 01/13/00 Supervisor: BL
Date Digested: _____ Date Analyzed: 01/05/00 Analyst: N/A
County: YAKIMA Group: A
Sample Location: WELL SITE
Send Report To: City of Zillah Bill To: City of Zillah

DOH #	ANALYTES	RESULTS	UNITS	SRL	TRIGGER	MCL	METHOD/ANALYST
	* * * * * * * EPA REGULATED * * * * * * *						
4	Arsenic	NA					
5	Barium	NA					
6	Cadmium	NA					
7	Chromium	NA					
11	Mercury	NA					
12	Selenium	NA					
110	Beryllium	NA					
111	Nickel	NA					
112	Antimony	NA					
113	Thallium	NA					
116	Cyanide	NA					
19	Fluoride	NA					
114	Nitrite - N	NA					
20	Nitrate - N	11.**	MG/L	0.50	5.0	10	SM 4500NO3D/HM
161	Total Nitrate / Nitrite	NA					
	* * EPA REGULATED (secondary) * *						
8	Iron	NA					
10	Manganese	NA					
13	Silver	NA					
21	Chloride	NA					
22	Sulfate	NA					
24	Zinc	NA					
	* * * * * * * STATE REGULATED * * * * * * *						
14	Sodium	NA					
15	Hardness	NA					
16	Conductivity	NA					
17	Turbidity	NA					
18	Color	NA					
26	Total Dissolved Solids (TDS)	NA					
	* * * * * * * STATE UNREGULATED * * * * * * *						
9	Lead	NA					
23	Copper	NA					
	* * * OTHER (optional) * * *						
171	Orthophosphate	NA					
172	Silica	NA					
402	Aluminum	NA					
403	Alkalinity	NA					
404	Magnesium	NA					
405	Calcium	NA					

NOTES:

SRL (State Reporting Level): indicates the minimum reporting level required by the Washington Department of Health (DOH).
Trigger Level: DOH Drinking water response level. Additional sampling required. Contact regional DOH office for additional information.
MCL (Maximum Contaminant Level): If the contaminant amount exceeds the MCL, contact your regional DOH office immediately.
** Contaminant amount exceeds the MCL
N/A (Not analyzed)
ND (Not detected)
* These are Federal Action Levels, not MCLs

This report is submitted for the exclusive use of the person, partnership, or corporation to whom it is addressed. Subsequent use of the name of this company or any

Laucks Since 1908
Testing Laboratories, Inc.
940 South Harney St., Seattle, WA 98108 (206) 767-5060 FAX (206) 767-5063
Chemistry, Microbiology and Technical Services

INORGANICS CHEMICALS (IOCS) REPORT FOR SAMPLE T001119-01

System ID No.: 99800W System Name: CITY OF ZILLAH
Lab Sample No.: 01430953 Date Collected: 01/10/00 DOH Source No: SO1
Multiple Source Nos.: _____ Sample Type: B Purpose: C
Date Received : 01/10/00 Date Reported: 01/20/00 Supervisor: BL
Date Digested: _____ Date Analyzed: 01/12/00 Analyst: N/A
County: YAKIMA Group: A
Sample Location: SO1 RAINIER WELL
Send Report To: City of Zillah Bill To: City of Zillah

DOH #	ANALYTES	RESULTS	UNITS	SRL	TRIGGER	MCL	METHOD/ANALYST
	* * * * * * * EPA REGULATED * * * * * * *						
4	Arsenic	NA					
5	Barium	NA					
6	Cadmium	NA					
7	Chromium	NA					
11	Mercury	NA					
12	Selenium	NA					
110	Beryllium	NA					
111	Nickel	NA					
112	Antimony	NA					
113	Thallium	NA					
116	Cyanide	NA					
19	Fluoride	NA					
114	Nitrite - N	NA					
20	Nitrate - N	10.+	MG/L	0.50	5.0	10	SM 4500NO3D/HM
161	Total Nitrate / Nitrite	NA					
	* * EPA REGULATED (secondary) * *						
8	Iron	NA					
10	Manganese	NA					
13	Silver	NA					
21	Chloride	NA					
22	Sulfate	NA					
24	Zinc	NA					
	* * * * * * * STATE REGULATED * * * * * * *						
14	Sodium	NA					
15	Hardness	NA					
16	Conductivity	NA					
17	Turbidity	NA					
18	Color	NA					
26	Total Dissolved Solids (TDS)	NA					
	* * * * * * * STATE UNREGULATED * * * * * * *						
9	Lead	NA					
23	Copper	NA					
	* * * OTHER (optional) * * *						
171	Orthophosphate	NA					
172	Silica	NA					
402	Aluminum	NA					
403	Alkalinity	NA					
404	Magnesium	NA					
405	Calcium	NA					

NOTES:

SRL (State Reporting Level): indicates the minimum reporting level required by the Washington Department of Health (DOH).
Trigger Level: DOH Drinking water response level. Additional sampling required. Contact regional DOH office for additional information.
MCL (Maximum Contaminant Level): If the contaminant amount exceeds the MCL, contact your regional DOH office immediately.

N/A (Not analyzed)
ND (Not detected)
+ Contaminant amount exceeds the trigger amount.
* These are Federal Action Levels, not MCLs

This report is submitted for the exclusive use of the person, partnership, or corporation to whom it is addressed. Subsequent use of the name of this company or any member of its staff in connection with the advertising or sale of any product or process will be granted only on contract. This company accepts no responsibility except for the due performance of inspection and/or analysis in good faith and according to the rules of the trade and of science.

Laucks Since 1908

Testing Laboratories, Inc.

1106 Ledwich Avenue, Yakima, WA 98902 (509) 248-4695 (509) 248-4034 FAX (509) 452-1265

Chemistry, Microbiology and Technical Services

INORGANICS, CHEMICALS (IOCS) REPORT FOR SAMPLE T005363-01

System ID No.: 99800W System Name: CITY OF ZILLAH
Lab Sample No.: 01433107 Date Collected: 05/24/00 DOH Source No: SO1
Multiple Source Nos.: _____ Sample Type: B Purpose: C
Date Received : 05/24/00 Date Reported: 06/02/00 Supervisor: BL
Date Digested: 05/25/00 Date Analyzed: 05/25/00 Analyst: N/A
County: YAKIMA Group: A
Sample Location: AT THE SOURCE
Send Report To: City of Zillah Bill To: City of Zillah

DOH #	ANALYTES	RESULTS	UNITS	SRL	TRIGGER	MCL	METHOD/ANALYST
	* * * * * * * EPA REGULATED * * * * * * *						
4	Arsenic	NA					
5	Barium	NA					
6	Cadmium	NA					
7	Chromium	NA					
11	Mercury	NA					
12	Selenium	NA					
110	Beryllium	NA					
111	Nickel	NA					
112	Antimony	NA					
113	Thallium	NA					
116	Cyanide	NA					
19	Fluoride	NA					
114	Nitrite - N	NA					
20	Nitrate - N	7.0+	MG/L	0.50	5.0	10	SM 4500NO3D/HM
161	Total Nitrate / Nitrite	NA					
	* * EPA REGULATED (secondary) * *						
8	Iron	NA					
10	Manganese	NA					
13	Silver	NA					
21	Chloride	NA					
22	Sulfate	NA					
24	Zinc	NA					
	* * * * * * * STATE REGULATED * * * * * * *						
14	Sodium	NA					
15	Hardness	NA					
16	Conductivity	NA					
17	Turbidity	NA					
18	Color	NA					
26	Total Dissolved Solids (TDS)	NA					
	* * * * * * * STATE UNREGULATED * * * * * * *						
9	Lead	NA					
23	Copper	NA					
	* * * OTHER (optional) * * *						
171	Orthophosphate	NA					
172	Silica	NA					
402	Aluminum	NA					
403	Alkalinity	NA					
404	Magnesium	NA					
405	Calcium	NA					

NOTES:

SRL (State Reporting Level): indicates the minimum reporting level required by the Washington Department of Health (DOH).

Trigger Level: DOH Drinking water response level. Additional sampling required. Contact regional DOH office for additional information.

MCL (Maximum Contaminant Level): If the contaminant amount exceeds the MCL, contact your regional DOH office immediately.

N/A (Not analyzed)
ND (Not detected)
* These are Federal Action Levels, not MCLs

+ Contaminant amount exceeds the trigger amount.

Laucks Since 1908
Testing Laboratories, Inc.
940 South Harney St., Seattle, WA 98108 (206) 767-5060 FAX (206) 767-5063

Chemistry, Microbiology, and Technical Services

INORGANICS CHEMICALS (IOCS) REPORT FOR SAMPLE T912285-01

System ID No.: 99800W System Name: CITY OF ZILLAH
Lab Sample No.: 0143052 Date Collected: 12/21/99 DOH Source No: SO1
Multiple Source Nos.: _____ Sample Type: B Purpose: C
Date Received : 12/21/99 Date Reported: 01/04/00 Supervisor: BL
Date Digested: 12/22/99 Date Analyzed: 12/22/99 Analyst: N/A
County: YAKIMA Group: A
Sample Location: RAINIAR WELL
Send Report To: City of Zillah Bill To: City of Zillah

DOH #	ANALYTES	RESULTS	UNITS	SRL	TRIGGER	MCL	METHOD/ANALYST
	* * * * * * * EPA REGULATED * * * * * * *						
4	Arsenic	NA					
5	Barium	NA					
6	Cadmium	NA					
7	Chromium	NA					
11	Mercury	NA					
12	Selenium	NA					
110	Beryllium	NA					
111	Nickel	NA					
112	Antimony	NA					
113	Thallium	NA					
116	Cyanide	NA					
19	Fluoride	NA					
114	Nitrite - N	NA					
20	Nitrate - N	11.**	MG/L	0.50	5.0	10	SM 4500NO3D/HM
161	Total Nitrate / Nitrite	NA					
	* * EPA REGULATED (secondary) * *						
8	Iron	NA					
10	Manganese	NA					
13	Silver	NA					
21	Chloride	NA					
22	Sulfate	NA					
24	Zinc	NA					
	* * * * * * * STATE REGULATED * * * * * * *						
14	Sodium	NA					
15	Hardness	NA					
16	Conductivity	NA					
17	Turbidity	NA					
18	Color	NA					
26	Total Dissolved Solids (TDS)	NA					
	* * * * * * * STATE UNREGULATED * * * * * * *						
9	Lead	NA					
23	Copper	NA					
	* * * OTHER (optional) * * *						
171	Orthophosphate	NA					
172	Silica	NA					
402	Aluminum	NA					
403	Alkalinity	NA					
404	Magnesium	NA					
405	Calcium	NA					

NOTES:

The drinking water results on this report are missing items which are required by the state for official results. If you wish to submit these results to the State of Washington Department of Health (DOH) for monitoring compliance, you must first supply the missing information or the DOH will reject this report.

This report is submitted for the exclusive use of the person, partnership, or corporation to whom it is addressed. Subsequent use of the name of this company or any member of its staff in connection with the advertising or sale of any product or process will be granted only on contract. This company accepts no responsibility except for the due performance of inspection and/or analysis in good faith and according to the rules of the trade and of science.

NITRATE & NITRITE CHEMICAL ANALYSIS - 3RD AVENUE WELL

Washington State Department of Health

Division of Environmental Health
Office of Drinking Water

Help

View Sample Detail - WSID 99800W - ZILLAH, CITY OF	
Collect Date	9/23/2013
Lab Number	151
Lab Name	Cascade Analytical Inc - Yakima
Sample Number	23024
Source	02
Analyte Group	IOC-INORGANIC CONTAMINANTS
Test Panel	NIT-NITRATE SUITE
Sample Location	third ave well
Sample Type	Pre-Treatment / Raw

Analyte DOH Num	Analyte Name	Result Range	Result Quantity	Maximum Contaminant Level	Units	State Reporting Limit
0020	NITRATE-N	LT	0.0500	10.0000	mg/L	0.2000
0114	NITRITE-N	LT	0.0500	1.0000	mg/L	0.2000
0161	TOTAL NITRATE/NITRITE	LT	0.5000		mg/L	0.5000

Records 1 - 3 of 3

Links to external resources are provided as a public service and do not imply endorsement by the Washington State Department of Health

Department of Health, Office of Drinking Water

Street Address:
243 Israel Road S.E. 2nd floor
Tumwater, WA 98501

Mail:
PO BOX 47822
Olympia, WA 98504-7822

Phone: (360) 236-3100

Send inquiries about DOH and its programs to the Health Consumer Assistance Office
Comments or questions regarding this Web site? Send email to Environmental Health Application Testing and Support or call 360-236-3113.

1008 W. Ahtanum Rd.
Union Gap, WA 98903
(509) 452-7707
Fax: (509) 452-7773

Billing Code: 04180
Batch #: 272688

CASCADE ANALYTICAL, INC.

3019 G.S. Center Rd.
Wenatchee, WA 98801
(509) 662-1888
Fax: (509) 662-8183

NITRATE & NITRITE ANALYTICAL REPORT

Send Report to: City of Zillah Dolly Meyer PO Box 475 Zillah, WA 98953	Bill to: (Client Name) City of Zillah PO Box 475 Zillah, WA 98953
Date Collected: (MM/DD/YY) 9 /25 /12	System Group Type: (Circle one) A B Other: (Specify)
Water System ID Number 98803	System Name: City of Zillah
Lab -- Sample Number 105 – 021572	County: Yakima
Sample Location: S02	Source Numbers(s) S02
Sample Purpose: (Check Appropriate Box) [X] RC - Routine/Compliance (satisfies monitoring requirements) [ ] C - Confirmation (confirmation of chemical result) [ ] I - Investigative (does not satisfy monitoring requirements) [ ] O - Other (specify)	Date Received: (MM/DD/YY) 9 /26 /12 Date Analyzed: (MM/DD/YY) 9 /27 /12 Date Reported: (MM/DD/YY) 9 /27 /12 COMMENTS:
Sample Composition: (Check Appropriate Box) [X] S - Single Source [ ] B - Blended (List Multiple Source Numbers in Source Nos. field) [ ] C - Composite (Specify in Comments field) [ ] D - Distribution sample	Sample Type: (Check one) [X] Pre-Treatment/Raw [ ] Post-Treatment/Finished [ ] Unknown Sample Collected by: Client Phone Number: 509-829-5151

EPA/STATE REGULATED

DOH #	ANALYTE	RESULTS	UNITS	SRL	TRIGGER	MCL	MCL EXCEEDED	Date Analyzed	METHOD/Analyst Initials
0020	Nitrate-N	2.40	mg/L	2	5.0	10.0	No	09/27/12	4500NO3-F/RMN
0114	Nitrite-N	< 0.07	mg/L	0.2	0.5	1.0	No	09/27/12	45C0NO2-F/RMN
0161	Total Nitrate + Nitrite	2.40	mg/L	2	–	10.0	No	09/27/12	45C0NO3-F/RMN

NOTES:
SRL (State Reporting Level): The minimum reporting level established by the Washington State Department of Health (DOH)
Trigger Level: DOH Drinking Water response level. Systems with compounds detected at concentrations in excess of this level may be required to take additional samples or monitor more frequently. Please contact your DOH drinking water regional office for further information.
MCL (maximum Contaminant level): If the contaminant amount exceeds the MCL, please contact your regional DOH office to determine follow-up actions.
NA: Not Analyzed: In the results column, indicates this compound was not included in the current analysis.
ND (Not Detected): In the results column, indicates this compound was analyzed and not detected at a level greater than or equal to the SRL.
<(0.00X): The compound was not detected in the sample at or above the concentration indicated (usually the lab MRL).

Comments:

Washington State Department of Health

Division of Environmental Health
Office of Drinking Water

Help

View Sample Detail - WSID 99800W - ZILLAH, CITY OF

Collect Date	9/21/2011
Lab Number	151
Lab Name	Cascade Analytical Inc - Yakima
Sample Number	19643
Source	02
Analyte Group	IOC-INORGANIC CONTAMINANTS
Test Panel	NIT-NITRATE SUITE
Sample Location	3rd ave well
Sample Type	Pre-Treatment / Raw

Analyte DOH Num	Analyte Name	Result Range	Result Quantity	Maximum Contaminant Level	Units	State Reporting Limit
0020	NITRATE-N	LT	0.0500	10.0000	mg/L	0.2000
0114	NITRITE-N	LT	0.0500	1.0000	mg/L	0.2000
0161	TOTAL NITRATE/NITRITE	LT	0.5000		mg/L	0.5000

Records 1 - 3 of 3

Links to external resources are provided as a public service and do not imply endorsement by the Washington State Department of Health

Department of Health, Office of Drinking Water

Street Address:
243 Israel Road S.E. 2nd floor
Tumwater, WA 98501

Mail:
PO BOX 47822
Olympia, WA 98504-7822

Phone: (360) 236-3100

Send inquiries about DOH and its programs to the Health Consumer Assistance Office
Comments or questions regarding this Web site? Send email to Environmental Health Application Testing and Support or call 360-236-3113.

Washington State Department of Health

Division of Environmental Health
Office of Drinking Water

Help

View Sample Detail - WSID 99800W - ZILLAH, CITY OF

Collect Date	6/15/2010
Lab Number	151
Lab Name	Cascade Analytical Inc - Yakima
Sample Number	10937
Source	02
Analyte Group	IOC-INORGANIC CONTAMINANTS
Test Panel	NIT-NITRATE SUITE
Sample Location	third ave well
Sample Type	Pre-Treatment / Raw

Analyte DOH Num	Analyte Name	Result Range	Result Quantity	Maximum Contaminant Level	Units	State Reporting Limit
0020	NITRATE-N	LT	0.0500	10.0000	mg/L	0.2000
0114	NITRITE-N	LT	0.0500	1.0000	mg/L	0.2000
0161	TOTAL NITRATE/NITRITE	LT	0.5000		mg/L	0.5000

Records 1 - 3 of 3

Links to external resources are provided as a public service and do not imply endorsement by the Washington State Department of Health

Department of Health, Office of Drinking Water

Street Address:
243 Israel Road S.E. 2nd floor
Tumwater, WA 98501

Mail:
PO BOX 47822
Olympia, WA 98504-7822

Phone: (360) 236-3100

Send inquiries about DOH and its programs to the Health Consumer Assistance Office
Comments or questions regarding this Web site? Send email to Environmental Health Application Testing and Support or call 360-236-3113.

1008 W. Ahtanum Rd.
Union Gap, WA 98903
(509) 452-7707
Fax: (509) 452-7773

Billing Code: 0410C
Batch #: 929750

CASCADE ANALYTICAL, INC.

3019 G.S. Center Rd.
Wenatchee, WA 98801
(509) 662-1888
Fax: (509) 662-8183

NITRATE & NITRITE ANALYTICAL REPORT

Send Report to: City of Zillah Dolly Meyer PO Box 475 Zillah, WA 98953	Bill to: (Client Name) City of Zillah PO Box 475 Zillah, WA 98953
Date Collected: (MM/DD/YY) 6 / 22 / 09	System Group Type: (Circle one) A B Other: (Specify)
Water System ID Number 99500W 151 010820	System Name: City of Zillah
Lab -- Sample Number ~~Hippo Well~~ 3rd Ave Well	County: Yakima
Sample Location:	Source Numbers(s) 02
Sample Purpose: (Check Appropriate Box) [X] RC - Routine/Compliance (satisfies monitoring requirements) [ ] C - Confirmation (confirmation of chemical result) [ ] I - Investigative (does not satisfy monitoring requirements) [ ] O - Other (specify)	Date Received: (MM/DD/YY) 6 / 22 / 09 Date Reported: (MM/DD/YY) 6 / 24 / 09 Date Received: (MM/DD/YY) 6 / 26 / 09 COMMENTS:
Sample Composition: (Check Appropriate Box) [X] S - Single Source [ ] B - Blended (List Multiple Source Numbers in Source Nos. field) [ ] C - Composite (Specify in Comments field) [ ] D - Distribution sample	Sample Type: (Check one) [X] Pre-Treatment/Raw [ ] Post-Treatment/Finished [ ] Unknown Sample Collected by: Client Phone Number: 509-829-5151

EPA/STATE REGULATED

DOH #	ANALYTE	RESULTS	UNITS	SRL	TRIGGER	MCL	MCL EXCEEDED	Date Analyzed	METHOD/Analyst Initials
0020	Nitrate-N	< 0.05	mg/L	2	5.0	10.0	No	06/24/09	EPA 300.0/KC
0114	Nitrite-N	< 0.05	mg/L	0.2	0.5	1.0	No	06/24/09	EPA 300.0/KC
0161	Total Nitrate + Nitrite	0.00	mg/L	2	--	10.0	No	06/24/09	EPA 300.0/KC

NOTES:

SRL (State Reporting Level): The minimum reporting level established by the Washington State Department of Health (DOH)

Trigger Level: DOH Drinking Water response level. Systems with compounds detected at concentrations in excess of this level may be required to take additional samples or monitor more frequently. Please contact your DOH drinking water regional office for further information.

MCL (maximum Contaminant level): If the contaminant amount exceeds the MCL, please contact your regional DOH office to determine follow-up actions.

NA: Not Analyzed: In the results column, indicates this compound was not included in the current analysis.

ND (Not Detected): In the results column, indicates this compound was analyzed and not detected at a level greater than or equal to the SRL.

<(0.00X): The compound was not detected in the sample at or above the concentration indicated (usually the lab MRL).

Comments:

Washington State Department of Health

Division of Environmental Health
Office of Drinking Water

Help

View Sample Detail - WSID 99800W - ZILLAH, CITY OF	
Collect Date	9/30/2008
Lab Number	151
Lab Name	Cascade Analytical Inc - Yakima
Sample Number	18953
Source	02
Analyte Group	IOC-INORGANIC CONTAMINANTS
Test Panel	NIT-NITRATE SUITE
Sample Location	3rd ave well
Sample Type	Pre-Treatment / Raw

DOH Num	Analyte Name	Result Range	Result Quantity	Maximum Contaminant Level	Units	State Reporting Limit
0020	NITRATE-N	LT	0.0500	10.0000	mg/L	0.2000
0114	NITRITE-N	LT	0.0500	1.0000	mg/L	0.2000
0161	TOTAL NITRATE/NITRITE	LT	0.5000		mg/L	0.5000

Records 1 - 3 of 3

Links to external resources are provided as a public service and do not imply endorsement by the Washington State Department of Health

Department of Health, Office of Drinking Water

Street Address:
243 Israel Road S.E. 2nd floor
Tumwater, WA 98501

Mail:
PO BOX 47822
Olympia, WA 98504-7822

Phone: (360) 236-3100

Send inquiries about DOH and its programs to the Health Consumer Assistance Office
Comments or questions regarding this Web site? Send email to Environmental Health Application Testing and Support or call 360-236-3113.

Washington State Department of Health

Division of Environmental Health
Office of Drinking Water

View Sample Detail - WSID 99800W - ZILLAH, CITY OF

Collect Date	9/20/2006
Lab Number	151
Lab Name	Cascade Analytical Inc - Yakima
Sample Number	17568
Source	02
Analyte Group	IOC-INORGANIC CONTAMINANTS
Test Panel	NIT-NITRATE SUITE
Sample Location	3rd ave well

Analyte DOH Num	Analyte Name	Result Range	Result Quantity	Maximum Contaminant Level	Units	State Reporting Limit
0020	NITRATE-N	LT	0.0500	10.0000	mg/L	0.2000
0114	NITRITE-N	LT	0.0500	1.0000	mg/L	0.2000
0161	TOTAL NITRATE/NITRITE	LT	0.5000		mg/L	0.5000

Records 1 - 3 of 3

Home Page | Find Water Systems | Find Water Quality | Downloads/Reports

DOH Home | Division of Environmental Health | Drinking Water Home | Drinking Water Contacts
Access Local Health | Privacy Notice | Disclaimer/Copyright Information

Links to external resources are provided as a public service and do not imply endorsement by the Washington State Department of Health

Office of Drinking Water
243 Israel Road SE
P.O. Box 47849
Tumwater, WA 98501
(360) 236-3113

Send inquiries about DOH and its programs to the Health Consumer Assistance Office
Comments or questions regarding this Web site? Send mail to ODW Help Desk.

Last Update : 07/21/2006

Washington State Department of Health

Division of Environmental Health
Office of Drinking Water

View Sample Detail - WSID 99800W - ZILLAH, CITY OF

Collect Date	9/8/2005
Lab Number	151
Lab Name	Cascade Analytical Inc - Yakima
Sample Number	16291
Source	02
Analyte Group	IOC-INORGANIC CONTAMINANTS
Test Panel	NIT-NITRATE SUITE
Sample Location	3rd ave

Analyte DOH Num	Analyte Name	Result Range	Result Quantity	Maximum Contaminant Level	Units	State Reporting Limit
0020	NITRATE-N	LT	0.0500	10.0000	mg/L	0.2000
0114	NITRITE-N	LT	0.0500	1.0000	mg/L	0.2000
0161	TOTAL NITRATE/NITRITE	LT	0.5000		mg/L	0.5000

Records 1 - 3 of 3

Home Page | Find Water Systems | Find Water Quality | Downloads/Reports

DOH Home | Division of Environmental Health | Drinking Water Home | Drinking Water Contacts
Access Local Health | Privacy Notice | Disclaimer/Copyright Information

Links to external resources are provided as a public service and do not imply endorsement by the Washington State Department of Health

Office of Drinking Water
243 Israel Road SE
P.O. Box 47849
Tumwater, WA 98501
(360) 236-3113

Send inquiries about DOH and its programs to the Health Consumer Assistance Office
Comments or questions regarding this Web site? Send mail to ODW Help Desk.

Last Update : 07/21/2006

Washington State Department of Health

Division of Environmental Health
Office of Drinking Water

View Sample Detail - WSID 99800W - ZILLAH, CITY OF

Collect Date	9/23/2004
Lab Number	105
Lab Name	Cascade Analytical Inc - Wenatchee
Sample Number	17157
Source	02
Analyte Group	IOC-INORGANIC CONTAMINANTS
Test Panel	NIT-NITRATE SUITE
Sample Location	3RD AVE WELL

Analyte DOH Num	Analyte Name	Result Range	Result Quantity	Maximum Contaminant Level	Units	State Reporting Limit
0020	NITRATE-N	LT	0.0500	10.0000	mg/L	0.2000
0114	NITRITE-N	LT	0.0500	1.0000	mg/L	0.2000
0161	TOTAL NITRATE/NITRITE	LT	0.5000		mg/L	0.5000

Records 1 - 3 of 3

Home Page | Find Water Systems | Find Water Quality | Downloads/Reports

DOH Home | Division of Environmental Health | Drinking Water Home | Drinking Water Contacts
Access Local Health | Privacy Notice | Disclaimer/Copyright Information

Links to external resources are provided as a public service and do not imply endorsement by the Washington State Department of Health

Office of Drinking Water
243 Israel Road SE
P.O. Box 47849
Tumwater, WA 98501
(360) 236-3113

Send inquiries about DOH and its programs to the Health Consumer Assistance Office
Comments or questions regarding this Web site? Send mail to ODW Help Desk.

Last Update : 07/21/2006

Washington State Department of Health

Division of Environmental Health
Office of Drinking Water

View Sample Detail - WSID 99800W - ZILLAH, CITY OF

Collect Date	9/25/2003
Lab Number	105
Lab Name	Cascade Analytical Inc - Wenatchee
Sample Number	16006
Source	02
Analyte Group	IOC-INORGANIC CONTAMINANTS
Test Panel	NIT-NITRATE SUITE
Sample Location	3rd ave well

Analyte DOH Num	Analyte Name	Result Range	Result Quantity	Maximum Contaminant Level	Units	State Reporting Limit
0020	NITRATE-N	LT	0.0500	10.0000	mg/L	0.2000
0114	NITRITE-N	LT	0.0500	1.0000	mg/L	0.2000
0161	TOTAL NITRATE/NITRITE	LT	0.5000		mg/L	0.5000

Records 1 - 3 of 3

Home Page | Find Water Systems | Find Water Quality | Downloads/Reports

DOH Home | Division of Environmental Health | Drinking Water Home | Drinking Water Contacts
Access Local Health | Privacy Notice | Disclaimer/Copyright Information

Links to external resources are provided as a public service and do not imply endorsement by the Washington State Department of Health

Office of Drinking Water
243 Israel Road SE
P.O. Box 47849
Tumwater, WA 98501
(360) 236-3113

Send inquiries about DOH and its programs to the Health Consumer Assistance Office
Comments or questions regarding this Web site? Send mail to ODW Help Desk.

Last Update : 07/21/2006

Billing Code: 04180

[illegible]: 507701

CASCADE ANALYTICAL, INC.

3019 G.S. Center Road
Wenatchee, WA 98801
(509) 662-1888
Fax: (509) 662-8183

INORGANIC CHEMICALS (IOCS) REPORT FOR NITRATES

System ID No.: 99800W	System Name: City of Zillah		
Lab/Sample No.: 15116291	Date Collected: 9/ 8/05		DOH Source No.: S02
Multiple Source Nos.:	Sample Type:		Sample Purpose: C
Date Received: 9/ 8/05	Date Reported: 9/12/05	Supervisor: Judy L. Brown	
	Date Analyzed: 9/ 9/05	Analyst: Traci Jefferis	
County: Yakima	Group: A X B Other		
Sample Location: S02			
Send Report To: City of Zillah PO Box 475 Zillah, WA 98953	Bill To: City of Zillah PO Box 475 Zillah, WA 98953		

DOH#	ANALYTES	RESULTS	UNITS	SRL	TRIGGER	MCL	EXCEEDS		Method / Analyst	
	EPA REGULATED						Trigger?	MCL?		
114	Nitrite – N	< 0.05	mg/L	0.5	0.5	1	No	No	EPA 300.0	TJ
20	Nitrate – N	< 0.05	mg/L	0.5	5.0	10	No	No	EPA 300.0	TJ
161	Total Nitrate / Nitrite	0.000	mg/L	0.5	5.0	10	No	No	EPA 300.0	TJ

NOTES:

SRL (State Reporting Level): indicates the minimum reporting level required by the Washington Department of Health (DOH).

Trigger Level: DOH Drinking Water response level. Systems with compounds detected at concentrations in excess of this level are required to take additional samples. Contact your regional DOH office for further information. (509) 456-2475 ask for Scott Fink.

MCL (Maximum contaminant Level): If the contaminant amount exceeds the MCL, immediately contact your regional DOH office.

NA (Not Analyzed): in the results column indicates this compound was not included in the current analysis.

ND (Not Detected): in the results column indicates this compound was analyzed and not detected at a level greater than or equal to the SRL.

< (0.001): Means less than a number. It also indicates that the compound was ***not detected*** in the sample at or above the concentration indicates.

Comments:

Billing Code: 04180

P[illegible]: 408375

CASCADE ANALYTICAL, INC.

3019 G.S. Center Road
Wenatchee, WA 98801
(509) 662-1888
Fax: (509) 662-8183

RECEIVED SEP 30 2004

INORGANIC CHEMICALS (IOCS) REPORT FOR NITRATES

System ID No.: 99800W	System Name: City of Zillah		
Lab/Sample No.: 10517157	Date Collected: 9/23/04	DOH Source No.: So2 3rd Ave. Well	
Multiple Source Nos.:	Sample Type: C	Sample Purpose:	
Date Received: 9/23/04	Date Reported: 9/27/04	Supervisor: Judy L. Brown	
	Date Analyzed: 9/24/04	Analyst: Traci Jefferis	
County: Yakima	Group: A X B Other		
Sample Location:			
Send Report To: City of Zillah PO Box 475 Zillah, WA 98953	Bill To: City of Zillah PO Box 475 Zillah, WA 98953		

DOH#	ANALYTES	RESULTS	UNITS	SRL	TRIGGER	MCL	EXCEEDS		Method / Analyst	
	EPA REGULATED						Trigger?	MCL?		
114	Nitrite – N	< 0.05	mg/L	0.5	0.5	1	No	No	EPA 300.0	TJ
20	Nitrate – N	< 0.05	mg/L	0.5	5.0	10	No	No	EPA 300.0	TJ
161	Total Nitrate / Nitrite	0.000	mg/L	0.5	5.0	10	No	No	EPA 300.0	TJ

NOTES:

SRL (State Reporting Level): indicates the minimum reporting level required by the Washington Department of Health (DOH).

Trigger Level: DOH Drinking Water response level. Systems with compounds detected at concentrations in excess of this level are required to take additional samples. Contact your regional DOH office for further information. (509) 456-2475 ask for Scott Fink.

MCL (Maximum contaminant Level): If the contaminant amount exceeds the MCL, immediately contact your regional DOH office.

NA (Not Analyzed): in the results column indicates this compound was not included in the current analysis.

ND (Not Detected): in the results column indicates this compound was analyzed and not detected at a level greater than or equal to the SRL.

< (0.001): Means less than a number. It also indicates that the compound was ***not detected*** in the sample at or above the concentration indicates.

Comments:

Billing Code: 04180

B[illegible]: 307030

CASCADE ANALYTICAL, INC.
3019 G.S. Center Road
Wenatchee, WA 98801
(509) 662-1888
Fax: (509) 662-8183

INORGANIC CHEMICALS (IOCS) REPORT FOR NITRATES

RECEIVED OCT - 6 2003

System ID No.: WA99800W	System Name: City of Zillah	
Lab/Sample No.: 10516006	Date Collected: 9/25/03	DOH Source No.: S02
Multiple Source Nos.:	Sample Type: B	Sample Purpose: C
Date Received: 9/25/03	Date Reported: 10/ 2/03	Supervisor: Judy L. Brown
	Date Analyzed: 9/26/03	Analyst: Barbara Zimmerman
County: Yakima	Group: A X B Other	
Sample Location:		
Send Report To: City of Zillah PO Box 475 Zillah, WA 98953	Bill To: City of Zillah PO Box 475 Zillah, WA 98953	

DOH#	ANALYTES	RESULTS	UNITS	SRL	TRIGGER	MCL	EXCEEDS		Method / Analyst
	EPA REGULATED						Trigger?	MCL?	
114	Nitrite – N	< 0.05	mg/L	0.5	0.5	1	No	No	EPA 300.0 BZ
20	Nitrate – N	< 0.05	mg/L	0.5	5.0	10	No	No	EPA 300.0 BZ
161	Total Nitrate / Nitrite	0.000	mg/L	0.5	5.0	10	No	No	EPA 300.0 BZ

NOTES:

SRL (State Reporting Level): indicates the minimum reporting level required by the Washington Department of Health (DOH).

Trigger Level: DOH Drinking Water response level. Systems with compounds detected at concentrations in excess of this level are required to take additional samples. Contact your regional DOH office for further information. (509) 456-2475 ask for Scott Fink.

MCL (Maximum contaminant Level): If the contaminant amount exceeds the MCL, immediately contact your regional DOH office.

NA (Not Analyzed): in the results column indicates this compound was not included in the current analysis.

ND (Not Detected): in the results column indicates this compound was analyzed and not detected at a level greater than or equal to the SRL.

< (0.001): Means less than a number. It also indicates that the compound was ***not detected*** in the sample at or above the concentration indicates.

Comments:

Rev. 9/97

Laucks Since 1908
Testing Laboratories, Inc.
940 South Harney St., Seattle, WA 98108 (206) 767-5060 Fax (206) 767-5063
1106 Ledwich Avenue, Yakima, WA 98902 (509) 248-4695 Fax (509) 452-1265
Chemistry, Microbiology, and Technical Services

INORGANICS CHEMICALS (IOCS) REPORT FOR SAMPLE T209138-01

System ID No.: 99800W System Name: CITY OF ZILLAH
Lab Sample No.: 01447941 Date Collected: 09/12/02 DOH Source No: S02
Multiple Source Nos.: Sample Type: B Purpose: C
Date Received : 09/12/02 Date Reported: 09/16/02 Supervisor: BL
Date Digested: 09/13/02 Date Analyzed: 09/13/02 Analyst: N/A
County: YAKIMA Group: A
Sample Location: 3RD AVE WELL
Send Report To: City of Zillah Bill To: City of Zillah

DOH #	ANALYTES	RESULTS	UNITS	SRL	TRIGGER	MCL	METHOD/ANALYST
	* * * * * * * EPA REGULATED * * * * * * *						
4	Arsenic	NA					
5	Barium	NA					
6	Cadmium	NA					
7	Chromium	NA					
11	Mercury	NA					
12	Selenium	NA					
110	Beryllium	NA					
111	Nickel	NA					
112	Antimony	NA					
113	Thallium	NA					
116	Cyanide	NA					
19	Fluoride	NA					
114	Nitrite - N	ND	MG/L	0.50	5.0	10	SM 4500NO3D/HM
20	Nitrate - N	NA					
161	Total Nitrate / Nitrite	NA					
	* * EPA REGULATED (secondary) * *						
8	Iron	NA					
10	Manganese	NA					
13	Silver	NA					
21	Chloride	NA					
22	Sulfate	NA					
24	Zinc	NA					
	* * * * * * * STATE REGULATED * * * * * * *						
14	Sodium	NA					
15	Hardness	NA					
16	Conductivity	NA					
17	Turbidity	NA					
18	Color	NA					
26	Total Dissolved Solids (TDS)	NA					
	* * * * * * * STATE UNREGULATED * * * * * * *						
9	Lead	NA					
23	Copper	NA					
	* * * OTHER (optional) * * *						
171	Orthophosphate	NA					
172	Silica	NA					
402	Aluminum	NA					
403	Alkalinity	NA					
404	Magnesium	NA					
405	Calcium	NA					

NOTES:

SRL (State Reporting Level): indicates the minimum reporting level required by the Washington Department of Health (DOH).

Trigger Level: DOH Drinking water response level. Additional sampling required. Contact regional DOH office for additional information.

MCL (Maximum Contaminant Level): If the contaminant amount exceeds the MCL, contact your regional DOH office immediately.

N/A (Not analyzed)
ND (Not detected)
* These are Federal Action Levels, not MCLs

This report is submitted for the exclusive use of the person, partnership, or corporation to whom it is addressed. Subsequent use of the name of this company or any member of its staff in connection with the advertising or sale of any product or process will be granted only on contract. This company accepts no responsibility except

NITRATE & NITRITE CHEMICAL ANALYSIS - WIPPCO WELL

Division of Environmental Health
Office of Drinking Water

View Sample Detail - WSID 99800W - ZILLAH, CITY OF	
Collect Date	9/23/2013
Lab Number	151
Lab Name	Cascade Analytical Inc - Yakima
Sample Number	23025
Source	03
Analyte Group	IOC-INORGANIC CONTAMINANTS
Test Panel	NIT-NITRATE SUITE
Sample Location	wippco well
Sample Type	Pre-Treatment / Raw

Analyte DOH Num	Analyte Name	Result Range	Result Quantity	Maximum Contaminant Level	Units	State Reporting Limit
0020	NITRATE-N	EQ	2.4900	10.0000	mg/L	0.2000
0161	TOTAL NITRATE/NITRITE	EQ	2.4900		mg/L	0.5000
0114	NITRITE-N	LT	0.0500	1.0000	mg/L	0.2000

Records 1 - 3 of 3

Home Page | **Find Water Systems** | **Find Water Quality** | **Downloads/Reports**

DOH Home | Community and Environment | Drinking Water Home | Drinking Water Contacts
Access Local Health | Privacy Notice | Disclaimer/Copyright Information

Links to external resources are provided as a public service and do not imply endorsement by the Washington State Department of Health

Department of Health, Office of Drinking Water

Street Address:
243 Israel Road S.E. 2nd floor
Tumwater, WA 98501

Mail:
PO BOX 47822
Olympia, WA 98504-7822

Phone: (360) 236-3100

Send inquiries about DOH and its programs to the Health Consumer Assistance Office
Comments or questions regarding this Web site? Send email to Environmental Health Application Testing and Support or call 360-236-3113.

You created this PDF from an application that is not licensed to print to novaPDF printer (http://www.novapdf.com) /8/2014

1008 W. Ahtanum Rd.
Union Gap, WA 98903
(509) 452-7707
Fax: (509) 452-7773

Billing Code: 04180
Batch #: 272688

CASCADE ANALYTICAL, INC.

3019 G.S. Center Rd.
Wenatchee, WA 98801
(509) 662-1888
Fax: (509) 662-8183

NITRATE & NITRITE ANALYTICAL REPORT

Send Report to: City of Zillah Dolly Heyer PO Box 475 Zillah, WA 98953	Bill to: (Client Name) City of Zillah PO Box 475 Zillah, WA 98953
Date Collected: (MM/DD/YY) 9 /25 /12	System Group Type: (Circle one) A B Other: (Specify)
Water System ID Number 99003W	System Name: City of Zillah
Lab -- Sample Number 105 -- 021573	County: Yakima
Sample Location: S03	Source Numbers(s) S03
Sample Purpose: (Check Appropriate Box) [X] RC - Routine/Compliance (satisfies monitoring requirements) [ ] C - Confirmation (confirmation of chemical result) [ ] I - Investigative (does not satisfy monitoring requirements) [ ] O - Other (specify)	Date Received: (MM/DD/YY) 9 /26 /12 Date Analyzed: (MM/DD/YY) 9 /27 /12 Date Reported: (MM/DD/YY) 9 /27 /12 COMMENTS:
Sample Composition: (Check Appropriate Box) [X] S - Single Source [ ] B - Blended (List Multiple Source Numbers in Source Nos. field) [ ] C - Composite (Specify in Comments field) [ ] D - Distribution sample	Sample Type: (Check one) [X] Pre-Treatment/Raw [ ] Post-Treatment/Finished [ ] Unknown Sample Collected by: Client Phone Number: 509-829-5451

EPA/STATE REGULATED

DOH #	ANALYTE	RESULTS	UNITS	SRL	TRIGGER	MCL	MCL EXCEEDED	Date Analyzed	METHOD/Analyst Initials
0020	Nitrate-N	< 0.07	mg/L	2	5.0	10.0	No	09/27/12	4500NO3-F/RMN
0114	Nitrite-N	< 0.07	mg/L	0.2	0.5	1.0	No	09/27/12	4500NO2-F/RMN
0161	Total Nitrate + Nitrite	0.00	mg/L	2	--	10.0	No	09/27/12	4500NO3-F/RMN

NOTES:

SRL (State Reporting Level): The minimum reporting level established by the Washington State Department of Health (DOH)

Trigger Level: DOH Drinking Water response level. Systems with compounds detected at concentrations in excess of this level may be required to take additional samples or monitor more frequently. Please contact your DOH drinking water regional office for further information.

MCL (maximum Contaminant level): If the contaminant amount exceeds the MCL, please contact your regional DOH office to determine follow-up actions.

NA: Not Analyzed: In the results column, indicates this compound was not included in the current analysis.

ND (Not Detected): In the results column, indicates this compound was analyzed and not detected at a level greater than or equal to the SRL.

<(0.00X): The compound was not detected in the sample at or above the concentration indicated (usually the lab MRL).

Comments:

Washington State Department of Health

Division of Environmental Health
Office of Drinking Water

Help

View Sample Detail - WSID 99800W - ZILLAH, CITY OF	
Collect Date	9/21/2011
Lab Number	151
Lab Name	Cascade Analytical Inc - Yakima
Sample Number	19644
Source	03
Analyte Group	IOC-INORGANIC CONTAMINANTS
Test Panel	NIT-NITRATE SUITE
Sample Location	wippco well
Sample Type	Pre-Treatment / Raw

DOH Num	Analyte Name	Result Range	Result Quantity	Maximum Contaminant Level	Units	State Reporting Limit
0020	NITRATE-N	EQ	2.2800	10.0000	mg/L	0.2000
0161	TOTAL NITRATE/NITRITE	EQ	2.2800		mg/L	0.5000
0114	NITRITE-N	LT	0.0500	1.0000	mg/L	0.2000

Records 1 - 3 of 3

Links to external resources are provided as a public service and do not imply endorsement by the Washington State Department of Health

Department of Health, Office of Drinking Water

Street Address:
243 Israel Road S.E. 2nd floor
Tumwater, WA 98501

Mail:
PO BOX 47822
Olympia, WA 98504-7822

Phone: (360) 236-3100

Send inquiries about DOH and its programs to the Health Consumer Assistance Office
Comments or questions regarding this Web site? Send email to Environmental Health Application Testing and Support or call 360-236-3113.

Washington State Department of Health

Division of Environmental Health
Office of Drinking Water

Help

View Sample Detail - WSID 99800W - ZILLAH, CITY OF	
Collect Date	6/15/2010
Lab Number	151
Lab Name	Cascade Analytical Inc - Yakima
Sample Number	10938
Source	03
Analyte Group	IOC-INORGANIC CONTAMINANTS
Test Panel	NIT-NITRATE SUITE
Sample Location	wippco well s03
Sample Type	Pre-Treatment / Raw

Analyte DOH Num	Analyte Name	Result Range	Result Quantity	Maximum Contaminant Level	Units	State Reporting Limit
0020	NITRATE-N	EQ	2.3000	10.0000	mg/L	0.2000
0161	TOTAL NITRATE/NITRITE	EQ	2.3000		mg/L	0.5000
0114	NITRITE-N	LT	0.0500	1.0000	mg/L	0.2000

Records 1 - 3 of 3

Links to external resources are provided as a public service and do not imply endorsement by the Washington State Department of Health

Department of Health, Office of Drinking Water

Street Address:
243 Israel Road S.E. 2nd floor
Tumwater, WA 98501

Mail:
PO BOX 47822
Olympia, WA 98504-7822

Phone: (360) 236-3100

Send inquiries about DOH and its programs to the Health Consumer Assistance Office
Comments or questions regarding this Web site? Send email to Environmental Health Application Testing and Support or call 360-236-3113.

1008 W. Ahtanum Rd.
Union Gap, WA 98903
(509) 452-7707
Fax: (509) 452-7773

Billing Code: 04182
Batch #: 929750



RECEIVED
JUN 2 8 2009

CASCADE ANALYTICAL, INC.

3019 G.S. Center Rd.
Wenatchee, WA 98801
(509) 662-1888
Fax: (509) 662-8183

NITRATE & NITRITE ANALYTICAL REPORT

Send Report to: City of Zillah Dolly Keyer PO Box 475 Zillah, WA 98953	Bill to: (Client Name) City of Zillah PO Box 475 Zillah, WA 98953
Date Collected: (MM/DD/YY) 6 / 22 / 09	System Group Type: (Circle one) A X B Other: (Specify)
Water System ID Number 99[illegible]	System Name: City of Zillah
Lab -- Sample Number 151 -- 010329	County: Yakima
Sample Location: Wippco Well	Source Numbers(s) 03
Sample Purpose: (Check Appropriate Box) X RC - Routine/Compliance (satisfies monitoring requirements) C - Confirmation (confirmation of chemical result) I - Investigative (does not satisfy monitoring requirements) O - Other (specify)	Date Received: (MM/DD/YY) 6 / 22 / 09 Analyzed Date Reported: (MM/DD/YY) 6 / 24 / 09 Reported Date Received: (MM/DD/YY) 6 / 26 / 09 COMMENTS:
Sample Composition: (Check Appropriate Box) S - Single Source B - Blended (List Multiple Source Numbers in Source Nos. field) C - Composite (Specify in Comments field) D - Distribution sample	Sample Type: (Check one) X Pre-Treatment/Raw Post-Treatment/Finished Unknown Sample Collected by: Client Phone Number: 509-829-5151

EPA/STATE REGULATED

DOH #	ANALYTE	RESULTS	UNITS	SRL	TRIGGER	MCL	MCL EXCEEDED	Date Analyzed	METHOD/Analyst Initials
0020	Nitrate-N	2.34	mg/L	2	5.0	10.0	No	06/24/09	EPA 300.0/KC
0114	Nitrite-N	< 0.05	mg/L	0.2	0.5	1.0	No	06/24/09	EPA 300.0/KC
0161	Total Nitrate + Nitrite	2.34	mg/L	2	--	10.0	No	06/24/09	EPA 300.0/KC

NOTES:

SRL (State Reporting Level): The minimum reporting level established by the Washington State Department of Health (DOH)

Trigger Level: DOH Drinking Water response level. Systems with compounds detected at concentrations in excess of this level may be required to take additional samples or monitor more frequently. Please contact your DOH drinking water regional office for further information.

MCL (maximum Contaminant level): If the contaminant amount exceeds the MCL, please contact your regional DOH office to determine follow-up actions.

NA: Not Analyzed: In the results column, indicates this compound was not included in the current analysis.

ND (Not Detected): In the results column, indicates this compound was analyzed and not detected at a level greater than or equal to the SRL.

<(0.00X): The compound was not detected in the sample at or above the concentration indicated (usually the lab MRL).

Comments:

Form #24

Rev. 8/06

Washington State Department of Health

Division of Environmental Health
Office of Drinking Water

Help

View Sample Detail - WSID 99800W - ZILLAH, CITY OF	
Collect Date	9/30/2008
Lab Number	151
Lab Name	Cascade Analytical Inc - Yakima
Sample Number	18954
Source	03
Analyte Group	IOC-INORGANIC CONTAMINANTS
Test Panel	NIT-NITRATE SUITE
Sample Location	wippco well
Sample Type	Pre-Treatment / Raw

Analyte DOH Num	Analyte Name	Result Range	Result Quantity	Maximum Contaminant Level	Units	State Reporting Limit
0020	NITRATE-N	EQ	2.5100	10.0000	mg/L	0.2000
0161	TOTAL NITRATE/NITRITE	EQ	2.5100		mg/L	0.5000
0114	NITRITE-N	LT	0.0500	1.0000	mg/L	0.2000

Records 1 - 3 of 3

Links to external resources are provided as a public service and do not imply endorsement by the Washington State Department of Health

Department of Health, Office of Drinking Water

Street Address:
243 Israel Road S.E. 2nd floor
Tumwater, WA 98501

Mail:
PO BOX 47822
Olympia, WA 98504-7822

Phone: (360) 236-3100

Send inquiries about DOH and its programs to the Health Consumer Assistance Office
Comments or questions regarding this Web site? Send email to Environmental Health Application Testing and Support or call 360-236-3113.

Washington State Department of Health

Division of Environmental Health
Office of Drinking Water

View Sample Detail - WSID 99800W - ZILLAH, CITY OF

Collect Date	9/19/2006
Lab Number	151
Lab Name	Cascade Analytical Inc - Yakima
Sample Number	17395
Source	03
Analyte Group	IOC-INORGANIC CONTAMINANTS
Test Panel	NIT-NITRATE SUITE
Sample Location	wippco well

Analyte DOH Num	Analyte Name	Result Range	Result Quantity	Maximum Contaminant Level	Units	State Reporting Limit
0020	NITRATE-N	EQ	2.5800	10.0000	mg/L	0.2000
0161	TOTAL NITRATE/NITRITE	EQ	2.5800		mg/L	0.5000
0114	NITRITE-N	LT	0.0500	1.0000	mg/L	0.2000

Records 1 - 3 of 3

Home Page | Find Water Systems | Find Water Quality | Downloads/Reports

DOH Home | Division of Environmental Health | Drinking Water Home | Drinking Water Contacts
Access Local Health | Privacy Notice | Disclaimer/Copyright Information

Links to external resources are provided as a public service and do not imply endorsement by the Washington State Department of Health

Office of Drinking Water
243 Israel Road SE
P.O. Box 47849
Tumwater, WA 98501
(360) 236-3113

Send inquiries about DOH and its programs to the Health Consumer Assistance Office
Comments or questions regarding this Web site? Send mail to ODW Help Desk.

Last Update : 07/21/2006

Washington State Department of Health

Division of Environmental Health
Office of Drinking Water

View Sample Detail - WSID 99800W - ZILLAH, CITY OF

Collect Date	9/8/2005
Lab Number	151
Lab Name	Cascade Analytical Inc - Yakima
Sample Number	16293
Source	03
Analyte Group	IOC-INORGANIC CONTAMINANTS
Test Panel	NIT-NITRATE SUITE
Sample Location	wippco well

Analyte DOH Num	Analyte Name	Result Range	Result Quantity	Maximum Contaminant Level	Units	State Reporting Limit
0020	NITRATE-N	EQ	2.6100	10.0000	mg/L	0.2000
0161	TOTAL NITRATE/NITRITE	EQ	2.6100		mg/L	0.5000
0114	NITRITE-N	LT	0.0500	1.0000	mg/L	0.2000

Records 1 - 3 of 3

Home Page | Find Water Systems | Find Water Quality | Downloads/Reports

DOH Home | Division of Environmental Health | Drinking Water Home | Drinking Water Contacts
Access Local Health | Privacy Notice | Disclaimer/Copyright Information

Links to external resources are provided as a public service and do not imply endorsement by the Washington State Department of Health

Office of Drinking Water
243 Israel Road SE
P.O. Box 47849
Tumwater, WA 98501
(360) 236-3113

Send inquiries about DOH and its programs to the Health Consumer Assistance Office
Comments or questions regarding this Web site? Send mail to ODW Help Desk.

Last Update : 07/21/2006

Washington State Department of Health

Division of Environmental Health
Office of Drinking Water

View Sample Detail - WSID 99800W - ZILLAH, CITY OF

Collect Date	3/24/2004
Lab Number	105
Lab Name	Cascade Analytical Inc - Wenatchee
Sample Number	04582
Source	03
Analyte Group	IOC-INORGANIC CONTAMINANTS
Test Panel	NIT-NITRATE SUITE
Sample Location	wippco well

Analyte DOH Num	Analyte Name	Result Range	Result Quantity	Maximum Contaminant Level	Units	State Reporting Limit
0020	NITRATE-N	EQ	2.4900	10.0000	mg/L	0.2000
0161	TOTAL NITRATE/NITRITE	EQ	2.4900		mg/L	0.5000
0114	NITRITE-N	LT	0.0500	1.0000	mg/L	0.2000

Records 1 - 3 of 3

Home Page | Find Water Systems | Find Water Quality | Downloads/Reports

DOH Home | Division of Environmental Health | Drinking Water Home | Drinking Water Contacts
Access Local Health | Privacy Notice | Disclaimer/Copyright Information

Links to external resources are provided as a public service and do not imply endorsement by the Washington State Department of Health

Office of Drinking Water
243 Israel Road SE
P.O. Box 47849
Tumwater, WA 98501
(360) 236-3113

Send inquiries about DOH and its programs to the Health Consumer Assistance Office
Comments or questions regarding this Web site? Send mail to ODW Help Desk.

Last Update : 07/21/2006

Washington State Department of Health

Division of Environmental Health
Office of Drinking Water

View Sample Detail - WSID 99800W - ZILLAH, CITY OF

Collect Date	9/23/2004
Lab Number	105
Lab Name	Cascade Analytical Inc - Wenatchee
Sample Number	17156
Source	03
Analyte Group	IOC-INORGANIC CONTAMINANTS
Test Panel	NIT-NITRATE SUITE
Sample Location	WIPPCO WELL

Analyte DOH Num	Analyte Name	Result Range	Result Quantity	Maximum Contaminant Level	Units	State Reporting Limit
0020	NITRATE-N	EQ	2.5900	10.0000	mg/L	0.2000
0161	TOTAL NITRATE/NITRITE	EQ	2.5900		mg/L	0.5000
0114	NITRITE-N	LT	0.0500	1.0000	mg/L	0.2000

Records 1 - 3 of 3

Home Page | Find Water Systems | Find Water Quality | Downloads/Reports

DOH Home | Division of Environmental Health | Drinking Water Home | Drinking Water Contacts
Access Local Health | Privacy Notice | Disclaimer/Copyright Information

Links to external resources are provided as a public service and do not imply endorsement by the Washington State Department of Health

Office of Drinking Water
243 Israel Road SE
P.O. Box 47849
Tumwater, WA 98501
(360) 236-3113

Send inquiries about DOH and its programs to the Health Consumer Assistance Office
Comments or questions regarding this Web site? Send mail to ODW Help Desk.

Last Update : 07/21/2006

Billing Code: 04180

t #: 507701

CASCADE ANALYTICAL, INC.

3019 G.S. Center Road
Wenatchee, WA 98801
(509) 662-1888
Fax: (509) 662-8183

INORGANIC CHEMICALS (IOCS) REPORT FOR NITRATES

System ID No.: 99800W	System Name: City of Zillah		
Lab/Sample No.: 15116293	Date Collected: 9/ 8/05		DOH Source No.: S03
Multiple Source Nos.:	Sample Type:		Sample Purpose: C
Date Received: 9/ 8/05	Date Reported: 9/12/05	Supervisor:	Judy L. Brown
	Date Analyzed: 9/ 9/05	Analyst:	Traci Jefferis
County: Yakima		Group: A X B	Other
Sample Location: S03			
Send Report To: City of Zillah PO Box 475 Zillah, WA 98953		Bill To: City of Zillah PO Box 475 Zillah, WA 98953	

DOH#	ANALYTES	RESULTS	UNITS	SRL	TRIGGER	MCL	EXCEEDS		Method / Analyst	
	EPA REGULATED						Trigger?	MCL?		
114	Nitrite – N	< 0.05	mg/L	0.5	0.5	1	No	No	EPA 300.0	TJ
20	Nitrate – N	2.61	mg/L	0.5	5.0	10	No	No	EPA 300.0	TJ
161	Total Nitrate / Nitrite	2.61	mg/L	0.5	5.0	10	No	No	EPA 300.0	TJ

NOTES:

SRL (State Reporting Level): indicates the minimum reporting level required by the Washington Department of Health (DOH).

Trigger Level: DOH Drinking Water response level. Systems with compounds detected at concentrations in excess of this level are required to take additional samples. Contact your regional DOH office for further information. (509) 456-2475 ask for Scott Fink.

MCL (Maximum contaminant Level): If the contaminant amount exceeds the MCL, immediately contact your regional DOH office.

NA (Not Analyzed): in the results column indicates this compound was not included in the current analysis.

ND (Not Detected): in the results column indicates this compound was analyzed and not detected at a level greater than or equal to the SRL.

< (0.001): Means less than a number. It also indicates that the compound was *not detected* in the sample at or above the concentration indicates.

Comments:

Rev. 9/97

Billing Code: 04180

Batch #: 402273

CASCADE ANALYTICAL, INC.

3019 G.S. Center Road
Wenatchee, WA 98801
(509) 662-1888
Fax: (509) 662-8183

INORGANIC CHEMICALS (IOCS) REPORT FOR NITRATES

RECEIVED MAR 2 6 2004

System ID No.: 99800W	System Name: city of Zillah		
Lab/Sample No.: 10504582	Date Collected: 3/24/04		DOH Source No.: 503
Multiple Source Nos.:	Sample Type: b		Sample Purpose: C
Date Received: 3/24/04	Date Reported: 3/25/04	Supervisor: Judy L. Brown	
	Date Analyzed: 3/24/04	Analyst: Barbara Zimmermann	
County: Yakima		Group: A X B Other	
Sample Location: Wippco Well			
Send Report To: City of Zillah PO Box 475 Zillah, WA 98953		Bill To: City of Zillah PO Box 475 Zillah, WA 98953	

DOH#	ANALYTES	RESULTS	UNITS	SRL	TRIGGER	MCL	EXCEEDS		Method / Analyst	
	EPA REGULATED						Trigger?	MCL?		
114	Nitrite – N	< 0.05	mg/L	0.5	0.5	1	No	No	EPA 300.0	BZ
20	Nitrate – N	2.49	mg/L	0.5	5.0	10	No	No	EPA 300.0	BZ
161	Total Nitrate / Nitrite	2.49	mg/L	0.5	5.0	10	No	No	EPA 300.0	BZ

NOTES:

SRL (State Reporting Level): indicates the minimum reporting level required by the Washington Department of Health (DOH).

Trigger Level: DOH Drinking Water response level. Systems with compounds detected at concentrations in excess of this level are required to take additional samples. Contact your regional DOH office for further information. (509) 456-2475 ask for Scott Fink.

MCL (Maximum contaminant Level): If the contaminant amount exceeds the MCL, immediately contact your regional DOH office.

NA (Not Analyzed): in the results column indicates this compound was not included in the current analysis.

ND (Not Detected): in the results column indicates this compound was analyzed and not detected at a level greater than or equal to the SRL.

< (0.001): Means less than a number. It also indicates that the compound was ***not detected*** in the sample at or above the concentration indicates.

Comments:

Billing Code: 04180

#: 408375

CASCADE ANALYTICAL, INC
3019 G.S. Center Road
Wenatchee, WA 98801
(509) 662-1888
Fax: (509) 662-8183

RECEIVED SEP 3 0 2004

INORGANIC CHEMICALS (IOCS) REPORT FOR NITRATES

System ID No.: 99800W	System Name: City of Zillah		
Lab/Sample No.: 10517156	Date Collected: 9/23/04	DOH Source No.: 503 Wippco Well	
Multiple Source Nos.:	Sample Type:	Sample Purpose: C	
Date Received: 9/23/04	Date Reported: 9/27/04	Supervisor: Judy L. Brown	
	Date Analyzed: 9/24/04	Analyst: Traci Jefferis	
County: Yakima	Group: A X B Other		
Sample Location:			
Send Report To: City of Zillah PO Box 475 Zillah, WA 98953	Bill To: City of Zillah PO Box 475 Zillah, WA 98953		

DOH#	ANALYTES	RESULTS	UNITS	SRL	TRIGGER	MCL	EXCEEDS		Method / Analyst	
	EPA REGULATED						Trigger?	MCL?		
114	Nitrite – N	< 0.05	mg/L	0.5	0.5	1	No	No	EPA 300.0	TJ
20	Nitrate – N	2.59	mg/L	0.5	5.0	10	No	No	EPA 300.0	TJ
161	Total Nitrate / Nitrite	2.59	mg/L	0.5	5.0	10	No	No	EPA 300.0	TJ

NOTES:

SRL (State Reporting Level): indicates the minimum reporting level required by the Washington Department of Health (DOH).

Trigger Level: DOH Drinking Water response level. Systems with compounds detected at concentrations in excess of this level are required to take additional samples. Contact your regional DOH office for further information. (509) 456-2475 ask for Scott Fink.

MCL (Maximum contaminant Level): If the contaminant amount exceeds the MCL, immediately contact your regional DOH office.

NA (Not Analyzed): in the results column indicates this compound was not included in the current analysis.

ND (Not Detected): in the results column indicates this compound was analyzed and not detected at a level greater than or equal to the SRL.

< (0.001): Means less than a number. It also indicates that the compound was ***not detected*** in the sample at or above the concentration indicates.

Comments:

Billing Code: 04180

P.O. #: 307030

CASCADE ANALYTICAL, INC.

3019 G.S. Center Road
Wenatchee, WA 98801
(509) 662-1888
Fax: (509) 662-8183

INORGANIC CHEMICALS (IOCS) REPORT FOR NITRATES

System ID No.: WA99800W	System Name City of Zillah	
Lab/Sample No.: 10516007	Date Collected: 9/25/03	DOH Source No. S03
Multiple Source Nos.:	Sample Type: B	Sample Purpose C
Date Received: 9/25/03	Date Reported: 10/ 2/03	Supervisor: Judy L. Brown
	Date Analyzed: 9/26/03	Analyst: Barbara Zimmerman
County: Yakima	Group: A X B Other	
Sample Location:		
Send Report To: City of Zillah PO Box 475 Zillah, WA 98953	Bill To: City of Zillah PO Box 475 Zillah, WA 98953	

DOH#	ANALYTES	RESULTS	UNITS	SRL	TRIGGER	MCL	EXCEEDS		Method / Analyst	
	EPA REGULATED						Trigger?	MCL?		
114	Nitrite – N	< 0.05	mg/L	0.5	0.5	1	No	No	EPA 300.0	BZ
20	Nitrate – N	2.59	mg/L	0.5	5.0	10	No	No	EPA 300.0	BZ
161	Total Nitrate / Nitrite	2.59	mg/L	0.5	5.0	10	No	No	EPA 300.0	BZ

NOTES:

SRL (State Reporting Level): indicates the minimum reporting level required by the Washington Department of Health (DOH).

Trigger Level: DOH Drinking Water response level. Systems with compounds detected at concentrations in excess of this level are required to take additional samples. Contact your regional DOH office for further information. (509) 456-2475 ask for Scott Fink.

MCL (Maximum contaminant Level): If the contaminant amount exceeds the MCL, immediately contact your regional DOH office.

NA (Not Analyzed): in the results column indicates this compound was not included in the current analysis.

ND (Not Detected): in the results column indicates this compound was analyzed and not detected at a level greater than or equal to the SRL.

< (0.001): Means less than a number. It also indicates that the compound was ***not detected*** in the sample at or above the concentration indicates.

Comments:

Laucks Since 1908
Testing Laboratories, Inc.
940 South Harney St., Seattle, WA 98108 (206) 767-5060 Fax (206) 767-5063
1106 Ledwich Avenue, Yakima, WA 98902 (509) 248-4695 Fax (509) 452-1265

Chemistry, Microbiology, and Technical Services

INORGANICS CHEMICALS (IOCS) REPORT FOR SAMPLE T209138-02

System ID No.: 99800W System Name: CITY OF ZILLAH
Lab Sample No.: 01447942 Date Collected: 09/12/02 DOH Source No: S03
Multiple Source Nos.: Sample Type: B Purpose: C
Date Received : 09/12/02 Date Reported: 09/16/02 Supervisor: BL
Date Digested: 09/13/02 Date Analyzed: 09/13/02 Analyst: N/A
County: YAKIMA Group: A
Sample Location: WIPPCO WELL
Send Report To: City of Zillah Bill To: City of Zillah

DOH #	ANALYTES	RESULTS	UNITS	SRL	TRIGGER	MCL	METHOD/ANALYST
	* * * * * * * EPA REGULATED * * * * * * *						
4	Arsenic	NA					
5	Barium	NA					
6	Cadmium	NA					
7	Chromium	NA					
11	Mercury	NA					
12	Selenium	NA					
110	Beryllium	NA					
111	Nickel	NA					
112	Antimony	NA					
113	Thallium	NA					
116	Cyanide	NA					
19	Fluoride	NA					
114	Nitrite - N	2.6	MG/L	0.50	5.0	10	SM 4500NO3D/HM
20	Nitrate - N	NA					
161	Total Nitrate / Nitrite	NA					
	* * EPA REGULATED (secondary) * *						
8	Iron	NA					
10	Manganese	NA					
13	Silver	NA					
21	Chloride	NA					
22	Sulfate	NA					
24	Zinc	NA					
	* * * * * * * STATE REGULATED * * * * * * *						
14	Sodium	NA					
15	Hardness	NA					
16	Conductivity	NA					
17	Turbidity	NA					
18	Color	NA					
26	Total Dissolved Solids (TDS)	NA					
	* * * * * * * STATE UNREGULATED * * * * * * *						
9	Lead	NA					
23	Copper	NA					
	* * * OTHER (optional) * * *						
171	Orthophosphate	NA					
172	Silica	NA					
402	Aluminum	NA					
403	Alkalinity	NA					
404	Magnesium	NA					
405	Calcium	NA					

NOTES:

SRL (State Reporting Level): indicates the minimum reporting level required by the Washington Department of Health (DOH).

Trigger Level: DOH Drinking water response level. Additional sampling required. Contact regional DOH office for additional information.

MCL (Maximum Contaminant Level): If the contaminant amount exceeds the MCL, contact your regional DOH office immediately.

N/A (Not analyzed)
ND (Not detected)
* These are Federal Action Levels, not MCLs

This report is submitted for the exclusive use of the person, partnership, or corporation to whom it is addressed. Subsequent use of the name of this company or any member of its staff in connection with the advertising or sale of any product or process will be granted only on contract. This company accepts no responsibility except

VOLATILE ORGANIC CHEMICAL ANALYSIS - RAINIER WELL

WATER MANAGEMENT LABORATORIES INC.

1515 80th St. E.
Tacoma, WA 98404
(253) 531-3121

VOLATILE ORGANIC CHEMICALS (VOC's) ANALYSIS REPORT
EPA TEST METHOD - EPA 524.2
WA DOH TEST PANEL: VOC1

System ID No.: 99800W	System Name: City of Zillah		
Lab/Sample No.: 08970558	Date Collected: 05/26/11		DOH Source No.: S01
Multiple Source Nos.: N/A	Sample Type: B		Sample Purpose: C
Date Received: 05/27/11	Date Analyzed: 05/31/11	Analyst: LHL	
	Date Reported: 06/01/11	Supervisor:	
County: Yakima	Group: A		
Sample Location: Rainier Avenue - Pumphouse Well Tap			
Send To: Cascade Analytical Inc. 1008 W. Ahtanum Rd., Suite 2 Union Gap, WA 98903		Remarks: 11C-009082 PO# 153738	

DOH #	ANALYTES	RESULTS	UNITS	SRL	TRIGGER	MCL	EXCEEDS	
	EPA REGULATED						Trigger?	MCL?
45	Vinyl Chloride	ND	ug/L	0.5	0.5	2	NO	NO
46	1,1 - Dichloroethylene	ND	ug/L	0.5	0.5	7	NO	NO
47	1,1,1 - Trichloroethane	ND	ug/L	0.5	0.5	200	NO	NO
48	Carbon Tetrachloride	ND	ug/L	0.5	0.5	5	NO	NO
49	Benzene	ND	ug/L	0.5	0.5	5	NO	NO
50	1,2 - Dichloroethane	ND	ug/L	0.5	0.5	5	NO	NO
51	Trichloroethylene	ND	ug/L	0.5	0.5	5	NO	NO
52	1,4 - Dichlorobenzene	ND	ug/L	0.5	0.5	75	NO	NO
56	Dichloromethane	ND	ug/L	0.5	0.5	5	NO	NO
57	trans-1,2 - Dichloroethylene	ND	ug/L	0.5	0.5	100	NO	NO
60	cis-1,2 - Dichloroethylene	ND	ug/L	0.5	0.5	70	NO	NO
63	1,2 - Dichloropropane	ND	ug/L	0.5	0.5	5	NO	NO
66	Toluene	ND	ug/L	0.5	0.5	1000	NO	NO
67	1,1,2 - Trichloroethane	ND	ug/L	0.5	0.5	5	NO	NO
68	Tetrachloroethylene	ND	ug/L	0.5	0.5	5	NO	NO
71	Chlorobenzene	ND	ug/L	0.5	0.5	100	NO	NO
73	Ethylbenzene	ND	ug/L	0.5	0.5	700	NO	NO
76	Styrene	ND	ug/L	0.5	0.5	100	NO	NO
84	1,2 - Dichlorobenzene	ND	ug/L	0.5	0.5	600	NO	NO
95	1,2,4 - Trichlorobenzene	ND	ug/L	0.5	0.5	70	NO	NO
160	Total Xylenes	ND	ug/L	0.5	0.5	10000	NO	NO
74	m/p Xylenes (MCL for Total)	ND	ug/L	0.5	0.5		NO	
75	o - Xylene (MCL for Total)	ND	ug/L	0.5	0.5		NO	
	TRIHALOMETHANES							
27	Chloroform	ND	ug/L	0.5	0.5		NO	
28	Bromodichloromethane	ND	ug/L	0.5	0.5		NO	
29	Chlorodibromomethane	ND	ug/L	0.5	0.5		NO	
30	Bromoform	ND	ug/L	0.5	0.5		NO	
31	TOTAL Trihalomethanes	ND	ug/L	NA	NA	80		NO

Water Management Laboratories, Inc.
1515 80th St. E.
Tacoma, WA 98404
(253) 531-3121

DOH #	ANALYTES	RESULTS	UNITS	SRL	TRIGGER	MCL	EXCEEDS	
	EPA UNREGULATED (Continued)						Trigger?	MCL?
53	Chloromethane	ND	ug/L	0.5	0.5		NO	
54	Bromomethane	ND	ug/L	0.5	0.5		NO	
58	1,1 - Dichloroethane	ND	ug/L	0.5	0.5		NO	
72	1,1,1,2 - Tetrachlroroethane	ND	ug/L	0.5	0.5		NO	
78	Bromobenzene	ND	ug/L	0.5	0.5		NO	
79	1,2,3 - Trichloropropane (Confirm by 504.1)	ND	ug/L	0.5	0.5		NO	
81	o - Chlorotoluene	ND	ug/L	0.5	0.5		NO	
85	Fluorotrichloromethane	ND	ug/L	0.5	0.5		NO	
86	Bromochloromethane	ND	ug/L	0.5	0.5		NO	
89	1,3,5 - Trimethylbenzene	ND	ug/L	0.5	0.5		NO	
91	1,2,4 - Trimethylbenzene	ND	ug/L	0.5	0.5		NO	
92	s - Butylbenzene	ND	ug/L	0.5	0.5		NO	
93	p - Isopropyltoluene	ND	ug/L	0.5	0.5		NO	
94	n - Butylbenzene	ND	ug/L	0.5	0.5		NO	
96	Napthalene	ND	ug/L	0.5	0.5		NO	
102	EDB (Confirm by 504.1)	ND	ug/L	0.5	0.5		NO	
103	DBCP (Confirm by 504.1)	ND	ug/L	0.5	0.5		NO	
162	Dichlorodifluoromethane	ND	ug/L	0.5	0.5		NO	
N/A	MTBE	ND	ug/L	0.5	0.5		NO	

NOTES:

SRL (State Reporting Level): Indicates the minimum reporting level required by the Washington Department of Health (DOH).

Trigger Level: DOH Drinking Water response level. Systems with compounds detected at concentrations in excess of this level may need to take additional samples. Contact your regional DOH office for further information.

MCL (Maximum Contaminant Level): If the contaminant amount exceeds the MCL, immediately contact your regional DOH office.

NA (Not Analyzed): In the RESULTS column indicates this compound was not included in the current analysis.

ND (Not Detected): In the RESULTS column indicates this compound was analyzed and not detected at a level greater than or equal to the SRL.

< : Indicates less than.

Comments:

A maximum contaminant level of 80 ug/L total Trihalomethanes (Compounds 27-30) is allowed.

Method 524.2: VOC's

Washington State Department of Health

Division of Environmental Health
Office of Drinking Water

View Sample Detail - WSID 99800W - ZILLAH, CITY OF

Collect Date	10/11/2006
Lab Number	089
Lab Name	Water Management Laboratory Inc
Sample Number	73993
Source	01
Analyte Group	VOC-VOLATILE ORGANIC CONTAMINANTS
Test Panel	VOC1-VOLATILE ORGANIC
Sample Location	rainier whd

Analyte DOH Num	Analyte Name	Result Range	Result Quantity	Maximum Contaminant Level	Units	State Reporting Limit
0027	CHLOROFORM	LT	0.5000		ug/L	0.5000
0028	BROMODICHLOROMETHANE	LT	0.5000		ug/L	0.5000
0029	DIBROMOCHLOROMETHANE	LT	0.5000		ug/L	0.5000
0030	BROMOFORM	LT	0.5000		ug/L	0.5000
0045	VINYL CHLORIDE	LT	0.5000	2.0000	ug/L	0.5000
0046	1,1 DICHLOROETHYLENE	LT	0.5000	7.0000	ug/L	0.5000
0047	1,1,1 TRICHLOROETHANE	LT	0.5000	200.0000	ug/L	0.5000
0048	CARBON TETRACHLORIDE	LT	0.5000	5.0000	ug/L	0.5000
0049	BENZENE	LT	0.5000	5.0000	ug/L	0.5000
0050	1,2 DICHLOROETHANE	LT	0.5000	5.0000	ug/L	0.5000
0051	TRICHLOROETHYLENE	LT	0.5000	5.0000	ug/L	0.5000
0052	1,4 DICHLOROBENZENE	LT	0.5000	75.0000	ug/L	0.5000
0053	CHLOROMETHANE	LT	0.5000		ug/L	0.5000
0054	BROMOMETHANE	LT	0.5000		ug/L	0.5000
0055	CHLOROETHANE	LT	0.5000		ug/L	0.5000
0056	METHYLENE CHLORIDE (DICHLOROMETHANE)	LT	0.5000	5.0000	ug/L	0.5000
0057	TRANS- 1,2 DICHLOROETHYLENE	LT	0.5000	100.0000	ug/L	0.5000
0058	1,1 DICHLOROETHANE	LT	0.5000		ug/L	0.5000
0059	2,2 DICHLOROPROPANE	LT	0.5000		ug/L	0.5000
0060	CIS- 1,2 DICHLOROETHYLENE	LT	0.5000	70.0000	ug/L	0.5000

<< FIRST < PREV > NEXT >> LAST

Records 1 - 20 of 61

Washington State Department of Health

Division of Environmental Health
Office of Drinking Water

View Sample Detail - WSID 99800W - ZILLAH, CITY OF

Collect Date	10/11/2006
Lab Number	089
Lab Name	Water Management Laboratory Inc
Sample Number	73993
Source	01
Analyte Group	VOC-VOLATILE ORGANIC CONTAMINANTS
Test Panel	VOC1-VOLATILE ORGANIC
Sample Location	rainier whd

Analyte DOH Num	Analyte Name	Result Range	Result Quantity	Maximum Contaminant Level	Units	State Reporting Limit
0062	1,1 DICHLOROPROPENE	LT	0.5000		ug/L	0.5000
0063	1,2 DICHLOROPROPANE	LT	0.5000	5.0000	ug/L	0.5000
0064	DIBROMOMETHANE	LT	0.5000		ug/L	0.5000
0065	CIS- 1,3 DICHLOROPROPENE	LT	0.5000		ug/L	0.5000
0066	TOLUENE	LT	0.5000	1000.0000	ug/L	0.5000
0067	1,1,2 TRICHLOROETHANE	LT	0.5000	5.0000	ug/L	0.5000
0068	TETRACHLOROETHYLENE	LT	0.5000	5.0000	ug/L	0.5000
0069	TRANS- 1,3 DICHLOROPROPENE	LT	0.5000		ug/L	0.5000
0070	1,3 DICHLOROPROPANE	LT	0.5000		ug/L	0.5000
0071	CHLOROBENZENE	LT	0.5000	100.0000	ug/L	0.5000
0072	1,1,1,2 TETRACHLOROETHANE	LT	0.5000		ug/L	0.5000
0073	ETHYLBENZENE	LT	0.5000	700.0000	ug/L	0.5000
0074	M/P XYLENES (MCL FOR TOTAL)	LT	0.5000		ug/L	0.5000
0075	O- XYLENE (MCL FOR TOTAL)	LT	0.5000		ug/L	0.5000
0076	STYRENE	LT	0.5000	100.0000	ug/L	0.5000
0078	BROMOBENZENE	LT	0.5000		ug/L	0.5000
0079	1,2,3 TRICHLOROPROPANE	LT	0.5000		ug/L	0.5000
0080	1,1,2,2 TETRACHLOROETHANE	LT	0.5000		ug/L	0.5000
0081	O- CHLOROTOLUENE	LT	0.5000		ug/L	0.5000
0082	P- CHLOROTOLUENE	LT	0.5000		ug/L	0.5000

<< FIRST < PREV > NEXT >> LAST

Records 21 - 40 of 61

Links to external resources are provided as a public service and do not imply endorsement by the Washington State Department of Health

Washington State Department of Health

Division of Environmental Health
Office of Drinking Water

View Sample Detail - WSID 99800W - ZILLAH, CITY OF

Collect Date	10/11/2006
Lab Number	089
Lab Name	Water Management Laboratory Inc
Sample Number	73993
Source	01
Analyte Group	VOC-VOLATILE ORGANIC CONTAMINANTS
Test Panel	VOC1-VOLATILE ORGANIC
Sample Location	rainier whd

Analyte DOH Num	Analyte Name	Result Range	Result Quantity	Maximum Contaminant Level	Units	State Reporting Limit
0102	EDB (ETHYLENE DIBROMIDE)	LT	0.5000	0.0500	ug/L	0.5000
0103	DBCP	LT	0.5000	0.2000	ug/L	0.5000
0083	M- DICHLOROBENZENE	LT	0.5000		ug/L	0.5000
0084	1,2 DICHLOROBENZENE	LT	0.5000	600.0000	ug/L	0.5000
0085	TRICHLOROFLUOROMETHANE	LT	0.5000		ug/L	0.5000
0086	BROMOCHLOROMETHANE	LT	0.5000		ug/L	0.5000
0087	ISOPROPYLBENZENE	LT	0.5000		ug/L	0.5000
0088	N-PROPYLBENZENE	LT	0.5000		ug/L	0.5000
0089	1,3,5 TRIMETHYLBENZENE	LT	0.5000		ug/L	0.5000
0090	TERT- BUTYLBENZENE	LT	0.5000		ug/L	0.5000
0091	1,2,4 TRIMETHYLBENZENE	LT	0.5000		ug/L	0.5000
0092	SEC- BUTYLBENZENE	LT	0.5000		ug/L	0.5000
0093	P-ISOPROPYLTOLUENE	LT	0.5000		ug/L	0.5000
0094	N-BUTYLBENZENE	LT	0.5000		ug/L	0.5000
0095	1,2,4 TRICHLOROBENZENE	LT	0.5000	70.0000	ug/L	0.5000
0096	NAPHTHALENE	LT	0.5000		ug/L	0.5000
0097	HEXACHLOROBUTADIENE	LT	0.5000		ug/L	0.5000
0098	1,2,3 TRICHLOROBENZENE	LT	0.5000		ug/L	0.5000
0104	DICHLORODIFLUOROMETHANE	LT	0.5000		ug/L	0.5000
0154	1,3 DICHLOROPROPENE	LT	0.5000		ug/L	0.5000

<< FIRST < PREV > NEXT >> LAST

Records 41 - 61 of 61

Links to external resources are provided as a public service and do not imply endorsement by the Washington State Department of Health

Washington State Department of Health

Division of Environmental Health
Office of Drinking Water

View Sample Detail - WSID 99800W - ZILLAH, CITY OF

Collect Date	10/11/2006
Lab Number	089
Lab Name	Water Management Laboratory Inc
Sample Number	73993
Source	01
Analyte Group	VOC-VOLATILE ORGANIC CONTAMINANTS
Test Panel	VOC1-VOLATILE ORGANIC
Sample Location	rainier whd

Analyte DOH Num	Analyte Name	Result Range	Result Quantity	Maximum Contaminant Level	Units	State Reporting Limit
0160	TOTAL XYLENES	LT	0.5000	1000.0000	ug/L	0.5000

<< FIRST < PREV > NEXT >> LAST

Records 61 - 61 of 61

Home Page | Find Water Systems | Find Water Quality | Downloads/Reports

DOH Home | Division of Environmental Health | Drinking Water Home | Drinking Water Contacts
Access Local Health | Privacy Notice | Disclaimer/Copyright Information

Links to external resources are provided as a public service and do not imply endorsement by the Washington State Department of Health

Office of Drinking Water
243 Israel Road SE
P.O. Box 47849
Tumwater, WA 98501
(360) 236-3113

Send inquiries about DOH and its programs to the Health Consumer Assistance Office
Comments or questions regarding this Web site? Send mail to ODW Help Desk.

Last Update : 07/21/2006

Washington State Department of Health

Division of Environmental Health
Office of Drinking Water

View Sample Detail - WSID 99800W - ZILLAH, CITY OF

Collect Date	7/24/2003
Lab Number	107
Lab Name	TestAmerica - Tacoma
Sample Number	25498
Source	01
Analyte Group	VOC-VOLATILE ORGANIC CONTAMINANTS
Test Panel	VOC1-VOLATILE ORGANIC
Sample Location	ranier well

Analyte DOH Num	Analyte Name	Result Range	Result Quantity	Maximum Contaminant Level	Units	State Reporting Limit
0027	CHLOROFORM	LT	0.5000		ug/L	0.5000
0028	BROMODICHLOROMETHANE	LT	0.5000		ug/L	0.5000
0029	DIBROMOCHLOROMETHANE	LT	0.5000		ug/L	0.5000
0030	BROMOFORM	LT	0.5000		ug/L	0.5000
0045	VINYL CHLORIDE	LT	0.5000	2.0000	ug/L	0.5000
0046	1,1 DICHLOROETHYLENE	LT	0.5000	7.0000	ug/L	0.5000
0047	1,1,1 TRICHLOROETHANE	LT	0.5000	200.0000	ug/L	0.5000
0048	CARBON TETRACHLORIDE	LT	0.5000	5.0000	ug/L	0.5000
0049	BENZENE	LT	0.5000	5.0000	ug/L	0.5000
0050	1,2 DICHLOROETHANE	LT	0.5000	5.0000	ug/L	0.5000
0051	TRICHLOROETHYLENE	LT	0.5000	5.0000	ug/L	0.5000
0052	1,4 DICHLOROBENZENE	LT	0.5000	75.0000	ug/L	0.5000
0053	CHLOROMETHANE	LT	0.5000		ug/L	0.5000
0054	BROMOMETHANE	LT	0.5000		ug/L	0.5000
0055	CHLOROETHANE	LT	0.5000		ug/L	0.5000
0056	METHYLENE CHLORIDE (DICHLOROMETHANE)	LT	0.5000	5.0000	ug/L	0.5000
0057	TRANS- 1,2 DICHLOROETHYLENE	LT	0.5000	100.0000	ug/L	0.5000
0058	1,1 DICHLOROETHANE	LT	0.5000		ug/L	0.5000
0059	2,2 DICHLOROPROPANE	LT	0.5000		ug/L	0.5000
0060	CIS- 1,2 DICHLOROETHYLENE	LT	0.5000	70.0000	ug/L	0.5000

<< FIRST < PREV > NEXT >> LAST

Records 1 - 20 of 59

Washington State Department of Health

Division of Environmental Health
Office of Drinking Water

View Sample Detail - WSID 99800W - ZILLAH, CITY OF

Collect Date	7/24/2003
Lab Number	107
Lab Name	TestAmerica - Tacoma
Sample Number	25498
Source	01
Analyte Group	VOC-VOLATILE ORGANIC CONTAMINANTS
Test Panel	VOC1-VOLATILE ORGANIC
Sample Location	ranier well

Analyte DOH Num	Analyte Name	Result Range	Result Quantity	Maximum Contaminant Level	Units	State Reporting Limit
0062	1,1 DICHLOROPROPENE	LT	0.5000		ug/L	0.5000
0063	1,2 DICHLOROPROPANE	LT	0.5000	5.0000	ug/L	0.5000
0064	DIBROMOMETHANE	LT	0.5000		ug/L	0.5000
0065	CIS- 1,3 DICHLOROPROPENE	LT	0.5000		ug/L	0.5000
0066	TOLUENE	LT	0.5000	1000.0000	ug/L	0.5000
0067	1,1,2 TRICHLOROETHANE	LT	0.5000	5.0000	ug/L	0.5000
0068	TETRACHLOROETHYLENE	LT	0.5000	5.0000	ug/L	0.5000
0069	TRANS- 1,3 DICHLOROPROPENE	LT	0.5000		ug/L	0.5000
0070	1,3 DICHLOROPROPANE	LT	0.5000		ug/L	0.5000
0071	CHLOROBENZENE	LT	0.5000	100.0000	ug/L	0.5000
0072	1,1,1,2 TETRACHLOROETHANE	LT	0.5000		ug/L	0.5000
0073	ETHYLBENZENE	LT	0.5000	700.0000	ug/L	0.5000
0074	M/P XYLENES (MCL FOR TOTAL)	LT	0.5000		ug/L	0.5000
0075	O- XYLENE (MCL FOR TOTAL)	LT	0.5000		ug/L	0.5000
0076	STYRENE	LT	0.5000	100.0000	ug/L	0.5000
0078	BROMOBENZENE	LT	0.5000		ug/L	0.5000
0079	1,2,3 TRICHLOROPROPANE	LT	0.5000		ug/L	0.5000
0080	1,1,2,2 TETRACHLOROETHANE	LT	0.5000		ug/L	0.5000
0081	O- CHLOROTOLUENE	LT	0.5000		ug/L	0.5000
0082	P- CHLOROTOLUENE	LT	0.5000		ug/L	0.5000

<< FIRST < PREV > NEXT >> LAST
Records 21 - 40 of 59

Links to external resources are provided as a public service and do not imply endorsement by the Washington State Department of Health

Washington State Department of Health

Division of Environmental Health
Office of Drinking Water

View Sample Detail - WSID 99800W - ZILLAH, CITY OF

Collect Date	7/24/2003
Lab Number	107
Lab Name	TestAmerica - Tacoma
Sample Number	25498
Source	01
Analyte Group	VOC-VOLATILE ORGANIC CONTAMINANTS
Test Panel	VOC1-VOLATILE ORGANIC
Sample Location	ranier well

Analyte DOH Num	Analyte Name	Result Range	Result Quantity	Maximum Contaminant Level	Units	State Reporting Limit
0102	EDB (ETHYLENE DIBROMIDE)	LT	0.5000	0.0500	ug/L	0.5000
0103	DBCP	LT	0.5000	0.2000	ug/L	0.5000
0083	M- DICHLOROBENZENE	LT	0.5000		ug/L	0.5000
0084	1,2 DICHLOROBENZENE	LT	0.5000	600.0000	ug/L	0.5000
0085	TRICHLOROFLUOROMETHANE	LT	0.5000		ug/L	0.5000
0086	BROMOCHLOROMETHANE	LT	0.5000		ug/L	0.5000
0087	ISOPROPYLBENZENE	LT	0.5000		ug/L	0.5000
0088	N-PROPYLBENZENE	LT	0.5000		ug/L	0.5000
0089	1,3,5 TRIMETHYLBENZENE	LT	0.5000		ug/L	0.5000
0090	TERT- BUTYLBENZENE	LT	0.5000		ug/L	0.5000
0091	1,2,4 TRIMETHYLBENZENE	LT	0.5000		ug/L	0.5000
0092	SEC- BUTYLBENZENE	LT	0.5000		ug/L	0.5000
0093	P-ISOPROPYLTOLUENE	LT	0.5000		ug/L	0.5000
0094	N-BUTYLBENZENE	LT	0.5000		ug/L	0.5000
0095	1,2,4 TRICHLOROBENZENE	LT	0.5000	70.0000	ug/L	0.5000
0096	NAPHTHALENE	LT	0.5000		ug/L	0.5000
0097	HEXACHLOROBUTADIENE	LT	0.5000		ug/L	0.5000
0098	1,2,3 TRICHLOROBENZENE	LT	0.5000		ug/L	0.5000
0104	DICHLORODIFLUOROMETHANE	LT	0.5000		ug/L	0.5000

<< FIRST < PREV > NEXT >> LAST

Records 41 - 59 of 59

Links to external resources are provided as a public service and do not imply endorsement by the Washington State Department of Health

Washington State Department of Health

Division of Environmental Health
Office of Drinking Water

View Sample Detail - WSID 99800W - ZILLAH, CITY OF

Collect Date	7/24/2003
Lab Number	107
Lab Name	TestAmerica - Tacoma
Sample Number	25498
Source	01
Analyte Group	VOC-VOLATILE ORGANIC CONTAMINANTS
Test Panel	VOC1-VOLATILE ORGANIC
Sample Location	ranier well

Analyte DOH Num	Analyte Name	Result Range	Result Quantity	Maximum Contaminant Level	Units	State Reporting Limit
0102	EDB (ETHYLENE DIBROMIDE)	LT	0.5000	0.0500	ug/L	0.5000
0103	DBCP	LT	0.5000	0.2000	ug/L	0.5000
0083	M- DICHLOROBENZENE	LT	0.5000		ug/L	0.5000
0084	1,2 DICHLOROBENZENE	LT	0.5000	600.0000	ug/L	0.5000
0085	TRICHLOROFLUOROMETHANE	LT	0.5000		ug/L	0.5000
0086	BROMOCHLOROMETHANE	LT	0.5000		ug/L	0.5000
0087	ISOPROPYLBENZENE	LT	0.5000		ug/L	0.5000
0088	N-PROPYLBENZENE	LT	0.5000		ug/L	0.5000
0089	1,3,5 TRIMETHYLBENZENE	LT	0.5000		ug/L	0.5000
0090	TERT- BUTYLBENZENE	LT	0.5000		ug/L	0.5000
0091	1,2,4 TRIMETHYLBENZENE	LT	0.5000		ug/L	0.5000
0092	SEC- BUTYLBENZENE	LT	0.5000		ug/L	0.5000
0093	P-ISOPROPYLTOLUENE	LT	0.5000		ug/L	0.5000
0094	N-BUTYLBENZENE	LT	0.5000		ug/L	0.5000
0095	1,2,4 TRICHLOROBENZENE	LT	0.5000	70.0000	ug/L	0.5000
0096	NAPHTHALENE	LT	0.5000		ug/L	0.5000
0097	HEXACHLOROBUTADIENE	LT	0.5000		ug/L	0.5000
0098	1,2,3 TRICHLOROBENZENE	LT	0.5000		ug/L	0.5000
0104	DICHLORODIFLUOROMETHANE	LT	0.5000		ug/L	0.5000

<< FIRST < PREV > NEXT >> LAST

Records 41 - 59 of 59

Links to external resources are provided as a public service and do not imply endorsement by the Washington State Department of Health

. 5755 8th Street East • Tacoma, WA 98424 • (253) 922-2310 • FAX (253) 922-5047

OBC-9988
45134-1

VOLATILE ORGANIC CHEMICALS (VOCs) ANALYSIS REPORT
EPA TEST METHOD - 524.2

System ID No.: 09800W	System Name: City of Zillah		
Lab/Sample No: 10725498	Date Collected: 7/24/03		DOH Source No: 80
Multiple Source Nos:	Sample Type:		Sample Purpose: C
Date Received: 7-29-03	Date Reported: 08-12-03	Supervisor:	
	Date Analyzed: 08-02-03	Analyst:	
County: Yakima		Group: (A) B Other	
Sample Location: Ranier Well			
Send Report To: DOH CAI	Bill To: CAI		

DOH #	ANALYTES	RESULTS	UNITS	SRL	TRIGGER	MCL	EXCEEDS		FLAG
	EPA REGULATED						Trigger?	MCL?	
45	Vinyl Chloride	ND	µg/l	0.5	0.5	2.0	No	No	
46	1,1 - Dichloroethylene	ND	µg/l	0.5	0.5	7.0	No	No	
47	1,1,1 - Trichloroethane	ND	µg/l	0.5	0.5	200	No	No	
48	Carbon Tetrachloride	ND	µg/l	0.5	0.5	5.0	No	No	
49	Benzene	ND	µg/l	0.5	0.5	5.0	No	No	
50	1,2 - Dichloroethane	ND	µg/l	0.5	0.5	5.0	No	No	
51	Trichloroethylene	ND	µg/l	0.5	0.5	5.0	No	No	
52	1,4 - Dichlorobenzene	ND	µg/l	0.5	0.5	75	No	No	
56	Dichloromethane	ND	µg/l	0.5	0.5	5.0	No	No	
57	trans - 1,2 - Dichloroethylene	ND	µg/l	0.5	0.5	100	No	No	
60	cis - 1,2 - Dichloroethylene	ND	µg/l	0.5	0.5	70	No	No	
63	1,2 - Dichloropropane	ND	µg/l	0.5	0.5	5.0	No	No	
66	Toluene	ND	µg/l	0.5	0.5	1000	No	No	
67	1,1,2 - Trichloroethane	ND	µg/l	0.5	0.5	5.0	No	No	
68	Tetrachloroethylene	ND	µg/l	0.5	0.5	5.0	No	No	
71	Chlorobenzene	ND	µg/l	0.5	0.5	100	No	No	
73	Ethylbenzene	ND	µg/l	0.5	0.5	700	No	No	
76	Styrene	ND	µg/l	0.5	0.5	100	No	No	
84	1,2 - Dichlorobenzene	ND	µg/l	0.5	0.5	600	No	No	
95	1,2,4 - Trichlorobenzene	ND	µg/l	0.5	0.5	70	No	No	
160	Total Xylenes	~~NA ND~~ 12 0	µg/l	0.5	0.5	10000	~~No~~	~~No~~	
74	m/p Xylenes (MCL For Total)	ND	µg/l	0.5	0.5		No	No	
75	o- Xylene (MCL For Total)	ND	µg/l	0.5	0.5		No	ND	
	EPA UNREGULATED								
27	Chloroform	ND	µg/l	0.5	0.5		No		
28	Bromodichloromethane	ND	µg/l	0.5	0.5		No		
29	Chlorodibromomethane	ND	µg/l	0.5	0.5		No		
30	Bromoform	ND	µg/l	0.5	0.5		No		
3	Chloromethane	ND	µg/l	0.5	0.5		No		
54	Bromomethane	ND	µg/l	0.5	0.5		No		
55	Chloroethane	ND	µg/l	0.5	0.5		No		

12 Aug 03

DOH #	ANALYTES	RESULTS	UNITS	SRL	TRIGGER	MCL	EXCEEDS		FLAG
	EPA UNREGULATED *(Continued)*						Trigger?	MCL?	
58	1,1 - Dichloroethane	ND	µg/l	0.5	0.5		No		
	2,2 Dichloropropane	ND	µg/l	0.5	0.5		No		
62	1,1 Dichloropropene	ND	µg/l	0.5	0.5		No		
64	Dibromomethane	ND	µg/l	0.5	0.5		No		
70	1,3 - Dichloropropane	ND	µg/l	0.5	0.5		No		
72	1,1,1,2 - Tetrachloroethane	ND	µg/l	0.5	0.5		No		
78	Bromobenzene	ND	µg/l	0.5	0.5		No		
79	1,2,3 - Trichloropropane	ND	µg/l	0.5	0.5		No		
80	1,1,2,2 - Tetrachloroethane	ND	µg/l	0.5	0.5		No		
81	o - Chlorotoluene	ND	µg/l	0.5	0.5		No		
82	p- Chlorotoluene	ND	µg/l	0.5	0.5		No		
83	m - Dichlorobenzene	ND	µg/l	0.5	0.5		No		
154	1,3-Dichloropropene	~~ND~~	µg/l	0.5	0.5				
	STATE UNREGULATED								
65	cis - 1,3 - Dichloropropene	ND	µg/l	0.5	0.5		No		
69	trans - 1,3 - Dichloropropene	ND	µg/l	0.5	0.5		No		
85	Fluorotrichloromethane	ND	µg/l	0.5	0.5		No		
86	Bromochloromethane	ND	µg/l	0.5	0.5		No		
87	Isopropylbenzene	ND	µg/l	0.5	0.5		No		
88	n - Propylbenzene	ND	µg/l	0.5	0.5		No		
89	1,3,5 Trimethylbenzene	ND	µg/l	0.5	0.5		No		
90	tert - Butylbenzene	ND	µg/l	0.5	0.5		No		
	1,2,4 - Trimethylbenzene	ND	µg/l	0.5	0.5		No		
2	sec - Butylbenzene	ND	µg/l	0.5	0.5		No		
93	p - Isopropyltoluene	ND	µg/l	0.5	0.5		No		
94	n - Butylbenzene	ND	µg/l	0.5	0.5		No		
96	Napthalene	ND	µg/l	0.5	0.5		No		
97	Hexachlorobutadiene	ND	µg/l	0.5	0.5		No		
98	1,2,3 - Trichlorobenzene	ND	µg/l	0.5	0.5		No		
102	EDB (Scan Confirm By 504.1 Only)	ND	µg/l	0.5	0.5		No		
103	DBCP (Scan Confirm By 504.1 Only)	ND	µg/l	0.5	0.5		No		
162	Dichlorodifluoromethane	ND	µg/l	0.5	0.5		No		

NOTES:

SRL (State Reporting Level): indicates the minimum reporting level required by the Washington Department of Health (DOH).

Trigger Level: DOH Drinking Water response level. Systems with compounds detected at concentrations in excess of this level are required to take additional samples. Contact your regional DOH office for further information.

MCL (maximum contaminant level): If the contaminant amount exceeds the MCL, immediately contact your regional DOH office.

NA (Not Analyzed): in the results column indicates this compound was not included in the current analysis.

ND (Not Detected): in the results column indicates this compound was analyzed and not detected at a level greater than or equal to the SRL.

< (0.001): indicates the compound was not detected in the sample at or above the concentration indicated.

C3: Second analysis confirmation was performed. The relative percent difference value (RPD) between the results on the two columns was evaluated and determined to be < 30%.

C4: Second analysis confirmation was performed. The RPD between the results on the two columns was evaluated and determined to be > 30%. The original analysis was reported unless anomalies were noted.

ıents:

Laucks Since 1908
Testing Laboratories, Inc.
940 South Harney St., Seattle, WA 98108 (206) 767-5060 FAX (206) 767-5063
Chemistry, Microbiology, and Technical Services

VOLATILE ORGANIC CHEMICALS (VOCs) ANALYSIS REPORT
EPA TEST METHOD - 524.2
For Sample 0209284-01

System ID No.: 99800W System name: CITY OF ZILLAH
Lab/Sample No.: 08185844 Date Collected: 09/12/02 DOH Source No.: S01
Multiple Source Nos.: _____ Sample Type: B Sample Purpose: C
Date Received: 09/16/02 Date Reported: 09/26/02 Supervisor: MC
Date Analyzed: 09/19/02 Analyst: ER
County: YAKIMA Group: A
Sample Location: RAINIER AVE WELL
Send Report To: City of Zillah Bill To: City of Zillah

DOH#	ANALYTES	RESULTS	UNITS	SRL	TRIGGER	MCL	EXCEEDS Trigger?	EXCEEDS MCL?
	EPA REGULATED							
45	Vinyl Chloride	ND	ug/L	0.5	0.5	2.0		
46	1,1-Dichloroethylene	ND	ug/L	0.5	0.5	7.0		
47	1,1,1-Trichloroethane	ND	ug/L	0.5	0.5	200		
48	Carbon Tetrachloride	ND	ug/L	0.5	0.5	5.0		
49	Benzene	ND	ug/L	0.5	0.5	5.0		
50	1,2-Dichloroethane	ND	ug/L	0.5	0.5	5.0		
51	Trichloroethylene	ND	ug/L	0.5	0.5	5.0		
52	1,4-Dichlorobenzene	ND	ug/L	0.5	0.5	75		
56	Dichloromethane	ND	ug/L	0.5	0.5	5.0		
57	trans-1,2-Dichloroethylene	ND	ug/L	0.5	0.5	100		
60	cis-1,2-Dichloroethylene	ND	ug/L	0.5	0.5	70		
63	1,2-Dichloropropane	ND	ug/L	0.5	0.5	5.0		
66	Toluene	ND	ug/L	0.5	0.5	1000		
67	1,1,2-Trichloroethane	ND	ug/L	0.5	0.5	5.0		
68	Tetrachloroethylene	ND	ug/L	0.5	0.5	5.0		
71	Chlorobenzene	ND	ug/L	0.5	0.5	100		
73	Ethylbenzene	ND	ug/L	0.5	0.5	700		
76	Styrene	ND	ug/L	0.5	0.5	100		
84	1,2-Dichlorobenzene	ND	ug/L	0.5	0.5	600		
95	1,2,4-Trichlorobenzene	ND	ug/L	0.5	0.5	70		
160	Total Xylenes	ND	ug/L	0.5	0.5	10000		
74	m/p-Xylenes (MCL For Total)	ND	ug/L	0.5	0.5			
75	o-Xylene (MCL For Total)	ND	ug/L	0.5	0.5			
	EPA UNREGULATED							
27	Chloroform	ND	ug/L	0.5	0.5			
28	Bromodichloromethane	ND	ug/L	0.5	0.5			
29	Chlorodibromomethane	ND	ug/L	0.5	0.5			
30	Bromoform	ND	ug/L	0.5	0.5			
53	Chloromethane	ND	ug/L	0.5	0.5			
54	Bromomethane	ND	ug/L	0.5	0.5			
55	Chloroethane	ND	ug/L	0.5	0.5			

This report is submitted for the exclusive use of the person, partnership, or corporation to whom it is addressed. Subsequent use of the name of this company or any member of its staff in connection with the advertising or sale of any product or process will be granted only on contract. This company accepts no responsibility except for the due performance of inspection and/or analysis in good faith and according to the rules of the trade and of science.

Laucks Since 1908
Testing Laboratories, Inc.
940 South Harney St., Seattle, WA 98108 (206) 767-5060 FAX (206) 767-5063

Chemistry, Microbiology, and Technical Services

Sample: 0209284-01

DOH#	ANALYTES	RESULTS	UNITS	SRL	TRIGGER	MCL	EXCEEDS Trigger?	EXCEEDS MCL?
	EPA UNREGULATED (Continued)							
58	1,1-Dichloroethane	ND	ug/L	0.5	0.5			
59	2,2-Dichloropropane	ND	ug/L	0.5	0.5			
62	1,1-Dichloropropene	ND	ug/L	0.5	0.5			
64	Dibromomethane	ND	ug/L	0.5	0.5			
70	1,3-Dichloropropane	ND	ug/L	0.5	0.5			
72	1,1,1,2-Tetrachloroethane	ND	ug/L	0.5	0.5			
78	Bromobenzene	ND	ug/L	0.5	0.5			
79	1,2,3-Trichloropropane	ND	ug/L	0.5	0.5			
80	1,1,2,2-Tetrachloroethane	ND	ug/L	0.5	0.5			
81	o-Chlorotoluene	ND	ug/L	0.5	0.5			
82	p-Chlorotoluene	ND	ug/L	0.5	0.5			
83	m-Dichlorobenzene	ND	ug/L	0.5	0.5			
154	1,3-Dichloropropene	ND	ug/L	0.5	0.5			
	STATE UNREGULATED							
65	cis-1,3-Dichloropropene	ND	ug/L	0.5	0.5			
69	trans-1,3-Dichloropropene	ND	ug/L	0.5	0.5			
85	Fluorotrichloromethane	ND	ug/L	0.5	0.5			
86	Bromochloromethane	ND	ug/L	0.5	0.5			
87	Isopropylbenzene	ND	ug/L	0.5	0.5			
88	n-Propylbenzene	ND	ug/L	0.5	0.5			
89	1,3,5-Trimethylbenzene	ND	ug/L	0.5	0.5			
90	tert-Butylbenzene	ND	ug/L	0.5	0.5			
91	1,2,4-Trimethylbenzene	ND	ug/L	0.5	0.5			
92	sec-Butylbenzene	ND	ug/L	0.5	0.5			
93	p-Isopropyltoluene	ND	ug/L	0.5	0.5			
94	n-Butylbenzene	ND	ug/L	0.5	0.5			
96	Naphthalene	ND	ug/L	0.5	0.5			
97	Hexachlorobutadiene	ND	ug/L	0.5	0.5			
98	1,2,3-Trichlorobenzene	ND	ug/L	0.5	0.5			
102	EDB (Scan Confirm by 504.1	ND	ug/L	0.5	0.5			
103	DBCP (Scan Confirm By 504.1	ND	ug/L	0.5	0.5			
162	Dichlorodifluoromethane	ND	ug/L	0.5	0.5			

NOTES:

SRL (State Reporting Level): indicates the minimum reporting level required by the Washington Department of Health (DOH).

Trigger Level: DOH Drinking Water response level. Systems with compounds detected at concentrations in excess of this level are required to take additional samples. Contact your regional DOH office.

NA (Not Analyzed): in the results column indicates this compound was not included in the current analyis.

ND (Not Detected): in the results column indicates this compound was analyzed and not detected at a level greater than or equal to the SRL.

<(0.001): indicates the compound was not detected in the sample at or above the concentration indicated.

Comments:

This report is submitted for the exclusive use of the person, partnership, or corporation to whom it is addressed. Subsequent use of the name of this company or any member of its staff in connection with the advertising or sale of any product or process will be granted only on contract. This company accepts no responsibility except for the due performance of inspection and/or analysis in good faith and according to the rules of the trade and of science.

Laucks Since 1908
Testing Laboratories, Inc.
940 South Harney St., Seattle, WA 98108 (206) 767-5060 FAX (206) 767-5063
Chemistry, Microbiology, and Technical Services

VOLATILE ORGANIC CHEMICALS (VOCs) ANALYSIS REPORT
EPA TEST METHOD - 524.2
For Sample 0106344-02

System ID No.: 99800W System name: City of Zillah
Lab/Sample No.: 08176819 Date Collected: 06/14/01 DOH Source No.: S01
Multiple Source Nos.: _____ Sample Type: B Sample Purpose: C
Date Received: 06/14/01 Date Reported: 07/02/01 Supervisor: MC
Date Analyzed: 06/20/01 Analyst: DP
County: YAKIMA Group: A
Sample Location: S01 Rainier Well
Send Report To: City of Zillah Bill To: City of Zillah

DOH#	ANALYTES	RESULTS	UNITS	SRL	TRIGGER	MCL	EXCEEDS Trigger?	EXCEEDS MCL?
	EPA REGULATED							
45	Vinyl Chloride	ND	ug/L	0.5	0.5	2.0		
46	1,1-Dichloroethylene	ND	ug/L	0.5	0.5	7.0		
47	1,1,1-Trichloroethane	ND	ug/L	0.5	0.5	200		
48	Carbon Tetrachloride	ND	ug/L	0.5	0.5	5.0		
49	Benzene	ND	ug/L	0.5	0.5	5.0		
50	1,2-Dichloroethane	ND	ug/L	0.5	0.5	5.0		
51	Trichloroethylene	ND	ug/L	0.5	0.5	5.0		
52	1,4-Dichlorobenzene	ND	ug/L	0.5	0.5	75		
56	Dichloromethane	ND	ug/L	0.5	0.5	5.0		
57	trans-1,2-Dichloroethylene	ND	ug/L	0.5	0.5	100		
60	cis-1,2-Dichloroethylene	ND	ug/L	0.5	0.5	70		
63	1,2-Dichloropropane	ND	ug/L	0.5	0.5	5.0		
66	Toluene	ND	ug/L	0.5	0.5	1000		
67	1,1,2-Trichloroethane	ND	ug/L	0.5	0.5	5.0		
68	Tetrachloroethylene	ND	ug/L	0.5	0.5	5.0		
71	Chlorobenzene	ND	ug/L	0.5	0.5	100		
73	Ethylbenzene	ND	ug/L	0.5	0.5	700		
76	Styrene	ND	ug/L	0.5	0.5	100		
84	1,2-Dichlorobenzene	ND	ug/L	0.5	0.5	600		
95	1,2,4-Trichlorobenzene	ND	ug/L	0.5	0.5	70		
160	Total Xylenes	ND	ug/L	0.5	0.5	10000		
74	m/p-Xylenes (MCL For Total)	ND	ug/L	0.5	0.5			
75	o-Xylene (MCL For Total)	ND	ug/L	0.5	0.5			
	EPA UNREGULATED							
27	Chloroform	ND	ug/L	0.5	0.5			
28	Bromodichloromethane	ND	ug/L	0.5	0.5			
29	Chlorodibromomethane	ND	ug/L	0.5	0.5			
30	Bromoform	ND	ug/L	0.5	0.5			
53	Chloromethane	ND	ug/L	0.5	0.5			
54	Bromomethane	ND	ug/L	0.5	0.5			
55	Chloroethane	ND	ug/L	0.5	0.5			

This report is submitted for the exclusive use of the person, partnership, or corporation to whom it is addressed. Subsequent use of the name of this company or any member of its staff in connection with the advertising or sale of any product or process will be granted only on contract. This company accepts no responsibility except for the due performance of inspection and/or analysis in good faith and according to the rules of the trade and of science.

Laucks Since 1908
Testing Laboratories, Inc.
940 South Harney St., Seattle, WA 98108 (206) 767-5060 FAX (206) 767-5063
Chemistry, Microbiology, and Technical Services

Sample: 0106344-02

DOH#	ANALYTES	RESULTS	UNITS	SRL	TRIGGER	MCL	EXCEEDS Trigger?	EXCEEDS MCL?
	EPA UNREGULATED (Continued)							
58	1,1-Dichloroethane	ND	ug/L	0.5	0.5			
59	2,2-Dichloropropane	ND	ug/L	0.5	0.5			
62	1,1-Dichloropropene	ND	ug/L	0.5	0.5			
64	Dibromomethane	ND	ug/L	0.5	0.5			
70	1,3-Dichloropropane	ND	ug/L	0.5	0.5			
72	1,1,1,2-Tetrachloroethane	ND	ug/L	0.5	0.5			
78	Bromobenzene	ND	ug/L	0.5	0.5			
79	1,2,3-Trichloropropane	ND	ug/L	0.5	0.5			
80	1,1,2,2-Tetrachloroethane	ND	ug/L	0.5	0.5			
81	o-Chlorotoluene	ND	ug/L	0.5	0.5			
82	p-Chlorotoluene	ND	ug/L	0.5	0.5			
83	m-Dichlorobenzene	ND	ug/L	0.5	0.5			
154	1,3-Dichloropropene	ND	ug/L	0.5	0.5			
	STATE UNREGULATED							
65	cis-1,3-Dichloropropene	ND	ug/L	0.5	0.5			
69	trans-1,3-Dichloropropene	ND	ug/L	0.5	0.5			
85	Fluorotrichloromethane	ND	ug/L	0.5	0.5			
86	Bromochloromethane	ND	ug/L	0.5	0.5			
87	Isopropylbenzene	ND	ug/L	0.5	0.5			
88	n-Propylbenzene	ND	ug/L	0.5	0.5			
89	1,3,5-Trimethylbenzene	ND	ug/L	0.5	0.5			
90	tert-Butylbenzene	ND	ug/L	0.5	0.5			
91	1,2,4-Trimethylbenzene	ND	ug/L	0.5	0.5			
92	sec-Butylbenzene	ND	ug/L	0.5	0.5			
93	p-Isopropyltoluene	ND	ug/L	0.5	0.5			
94	n-Butylbenzene	ND	ug/L	0.5	0.5			
96	Naphthalene	ND	ug/L	0.5	0.5			
97	Hexachlorobutadiene	ND	ug/L	0.5	0.5			
98	1,2,3-Trichlorobenzene	ND	ug/L	0.5	0.5			
102	EDB (Scan Confirm by 504.1	ND	ug/L	0.5	0.5			
103	DBCP (Scan Confirm By 504.1	ND	ug/L	0.5	0.5			
162	Dichlorodifluoromethane	ND	ug/L	0.5	0.5			

NOTES:

SRL (State Reporting Level): indicates the minimum reporting level required by the Washington Department of Health (DOH).

Trigger Level: DOH Drinking Water response level. Systems with compounds detected at concentrations in excess of this level are required to take additional samples. Contact your regional DOH office.

NA (Not Analyzed): in the results column indicates this compound was not included in the current analyis.

ND (Not Detected): in the results column indicates this compound was analyzed and not detected at a level greater than or equal to the SRL.

<(0.001): indicates the compound was not detected in the sample at or above the concentration indicated.

Comments:

This report is submitted for the exclusive use of the person, partnership, or corporation to whom it is addressed. Subsequent use of the name of this company or any member of its staff in connection with the advertising or sale of any product or process will be granted only on contract. This company accepts no responsibility except for the due performance of inspection and/or analysis in good faith and according to the rules of the trade and of science.

Laucks Since 1908
Testing Laboratories, Inc.
940 South Harney St., Seattle, WA 98108 (206) 767-5060 FAX (206) 767-5063
Chemistry, Microbiology, and Technical Services

VOLATILE ORGANIC CHEMICALS (VOCs) ANALYSIS REPORT
EPA TEST METHOD - 524.2
For Sample 0002189-01

System ID No.: 99800W System name: City of Zillah
Lab/Sample No.: 08167857 Date Collected: 02/03/00 DOH Source No.: S01
Multiple Source Nos.: Sample Type: U Sample Purpose: C
Date Received: 02/03/00 Date Reported: 02/28/00 Supervisor: MC
Date Analyzed: 02/15/00 Analyst: JM
County: YAKIMA Group: A
Sample Location: Rainier Well
Send Report To: City of Zillah Bill To: City of Zillah

DOH#	ANALYTES	RESULTS	UNITS	SRL	TRIGGER	MCL	EXCEEDS Trigger?	EXCEEDS MCL?
	EPA REGULATED							
45	Vinyl Chloride	ND	ug/L	0.5	0.5	2.0		
46	1,1-Dichloroethylene	ND	ug/L	0.5	0.5	7.0		
47	1,1,1-Trichloroethane	ND	ug/L	0.5	0.5	200		
48	Carbon Tetrachloride	ND	ug/L	0.5	0.5	5.0		
49	Benzene	ND	ug/L	0.5	0.5	5.0		
50	1,2-Dichloroethane	ND	ug/L	0.5	0.5	5.0		
51	Trichloroethylene	ND	ug/L	0.5	0.5	5.0		
52	1,4-Dichlorobenzene	ND	ug/L	0.5	0.5	75		
56	Dichloromethane	ND	ug/L	0.5	0.5	5.0		
57	trans-1,2-Dichloroethylene	ND	ug/L	0.5	0.5	100		
60	cis-1,2-Dichloroethylene	ND	ug/L	0.5	0.5	70		
63	1,2-Dichloropropane	ND	ug/L	0.5	0.5	5.0		
66	Toluene	ND	ug/L	0.5	0.5	1000		
67	1,1,2-Trichloroethane	ND	ug/L	0.5	0.5	5.0		
68	Tetrachloroethylene	ND	ug/L	0.5	0.5	5.0		
71	Chlorobenzene	ND	ug/L	0.5	0.5	100		
73	Ethylbenzene	ND	ug/L	0.5	0.5	700		
76	Styrene	ND	ug/L	0.5	0.5	100		
84	1,2-Dichlorobenzene	ND	ug/L	0.5	0.5	600		
95	1,2,4-Trichlorobenzene	ND	ug/L	0.5	0.5	70		
160	Total Xylenes	ND	ug/L	0.5	0.5	10000		
74	m/p-Xylenes (MCL For Total)	ND	ug/L	0.5	0.5			
75	o-Xylene (MCL For Total)	ND	ug/L	0.5	0.5			
	EPA UNREGULATED							
27	Chloroform	ND	ug/L	0.5	0.5			
28	Bromodichloromethane	ND	ug/L	0.5	0.5			
29	Chlorodibromomethane	ND	ug/L	0.5	0.5			
30	Bromoform	ND	ug/L	0.5	0.5			
53	Chloromethane	ND	ug/L	0.5	0.5			
54	Bromomethane	ND	ug/L	0.5	0.5			
55	Chloroethane	ND	ug/L	0.5	0.5			

This report is submitted for the exclusive use of the person, partnership, or corporation to whom it is addressed. Subsequent use of the name of this company or any member of its staff in connection with the advertising or sale of any product or process will be granted only on contract. This company accepts no responsibility except for the due performance of inspection and/or analysis in good faith and according to the rules of the trade and of science.

Laucks Since 1908
Testing Laboratories, Inc.
940 South Harney St., Seattle, WA 98108 (206) 767-5060 FAX (206) 767-5063

Chemistry, Microbiology, and Technical Services

Sample: 0002189-01

DOH#	ANALYTES	RESULTS	UNITS	SRL	TRIGGER	MCL	EXCEEDS Trigger?	EXCEEDS MCL?
	EPA UNREGULATED (Continued)							
58	1,1-Dichloroethane	ND	ug/L	0.5	0.5			
59	2,2-Dichloropropane	ND	ug/L	0.5	0.5			
62	1,1-Dichloropropene	ND	ug/L	0.5	0.5			
64	Dibromomethane	ND	ug/L	0.5	0.5			
70	1,3-Dichloropropane	ND	ug/L	0.5	0.5			
72	1,1,1,2-Tetrachloroethane	ND	ug/L	0.5	0.5			
78	Bromobenzene	ND	ug/L	0.5	0.5			
79	1,2,3-Trichloropropane	ND	ug/L	0.5	0.5			
80	1,1,2,2-Tetrachloroethane	ND	ug/L	0.5	0.5			
81	o-Chlorotoluene	ND	ug/L	0.5	0.5			
82	p-Chlorotoluene	ND	ug/L	0.5	0.5			
83	m-Dichlorobenzene	ND	ug/L	0.5	0.5			
154	1,3-Dichloropropene	ND	ug/L	0.5	0.5			
	STATE UNREGULATED							
65	cis-1,3-Dichloropropene	ND	ug/L	0.5	0.5			
69	trans-1,3-Dichloropropene	ND	ug/L	0.5	0.5			
85	Fluorotrichloromethane	ND	ug/L	0.5	0.5			
86	Bromochloromethane	ND	ug/L	0.5	0.5			
87	Isopropylbenzene	ND	ug/L	0.5	0.5			
88	n-Propylbenzene	ND	ug/L	0.5	0.5			
89	1,3,5-Trimethylbenzene	ND	ug/L	0.5	0.5			
90	tert-Butylbenzene	ND	ug/L	0.5	0.5			
91	1,2,4-Trimethylbenzene	ND	ug/L	0.5	0.5			
92	sec-Butylbenzene	ND	ug/L	0.5	0.5			
93	p-Isopropyltoluene	ND	ug/L	0.5	0.5			
94	n-Butylbenzene	ND	ug/L	0.5	0.5			
96	Naphthalene	ND	ug/L	0.5	0.5			
97	Hexachlorobutadiene	ND	ug/L	0.5	0.5			
98	1,2,3-Trichlorobenzene	ND	ug/L	0.5	0.5			
102	EDB (Scan Confirm by 504.1	ND	ug/L	0.5	0.5			
103	DBCP (Scan Confirm By 504.1	ND	ug/L	0.5	0.5			
162	Dichlorodifluoromethane	ND	ug/L	0.5	0.5			

NOTES:

SRL (State Reporting Level): indicates the minimum reporting level required by the Washington Department of Health (DOH).

Trigger Level: DOH Drinking Water response level. Systems with compounds detected at concentrations in excess of this level are required to take additional samples. Contact your regional DOH office.

NA (Not Analyzed): in the results column indicates this compound was not included in the current analyis.

ND (Not Detected): in the results column indicates this compound was analyzed and not detected at a level greater than or equal to the SRL.

<(0.001): indicates the compound was not detected in the sample at or above the concentration indicated.

Comments:

This report is submitted for the exclusive use of the person, partnership, or corporation to whom it is addressed. Subsequent use of the name of this company or any member of its staff in connection with the advertising or sale of any product or process will be granted only on contract. This company accepts no responsibility except for the due performance of inspection and/or analysis in good faith and according to the rules of the trade and of science.

VOLATILE ORGANIC CHEMICAL ANALYSIS - 3RD AVENUE WELL

Washington State Department of Health

Division of Environmental Health
Office of Drinking Water

Help

View Sample Detail - WSID 99800W - ZILLAH, CITY OF

Collect Date	9/23/2010
Lab Number	089
Lab Name	Water Management Laboratory Inc
Sample Number	79983
Source	02
Analyte Group	VOC-VOLATILE ORGANIC CONTAMINANTS
Test Panel	VOC1-VOLATILE ORGANIC
Sample Location	third ave well
Sample Type	Pre-Treatment / Raw

Analyte DOH Num	Analyte Name	Result Range	Result Quantity	Maximum Contaminant Level	Units	State Reporting Limit
0027	CHLOROFORM	LT	0.5000		ug/L	0.5000
0028	BROMODICHLOROMETHANE	LT	0.5000		ug/L	0.5000
0029	DIBROMOCHLOROMETHANE	LT	0.5000		ug/L	0.5000
0030	BROMOFORM	LT	0.5000		ug/L	0.5000
0045	VINYL CHLORIDE	LT	0.5000	2.0000	ug/L	0.5000
0046	1,1 DICHLOROETHYLENE	LT	0.5000	7.0000	ug/L	0.5000
0047	1,1,1 TRICHLOROETHANE	LT	0.5000	200.0000	ug/L	0.5000
0048	CARBON TETRACHLORIDE	LT	0.5000	5.0000	ug/L	0.5000
0049	BENZENE	LT	0.5000	5.0000	ug/L	0.5000
0050	1,2 DICHLOROETHANE	LT	0.5000	5.0000	ug/L	0.5000
0051	TRICHLOROETHYLENE	LT	0.5000	5.0000	ug/L	0.5000
0052	1,4 DICHLOROBENZENE	LT	0.5000	75.0000	ug/L	0.5000
0053	CHLOROMETHANE	LT	0.5000		ug/L	0.5000
0054	BROMOMETHANE	LT	0.5000		ug/L	0.5000
0056	METHYLENE CHLORIDE (DICHLOROMETHANE)	LT	0.5000	5.0000	ug/L	0.5000
0057	TRANS- 1,2 DICHLOROETHYLENE	LT	0.5000	100.0000	ug/L	0.5000
0058	1,1 DICHLOROETHANE	LT	0.5000		ug/L	0.5000
0060	CIS- 1,2 DICHLOROETHYLENE	LT	0.5000	70.0000	ug/L	0.5000
0063	1,2 DICHLOROPROPANE	LT	0.5000	5.0000	ug/L	0.5000
0066	TOLUENE	LT	0.5000	1000.0000	ug/L	0.5000
0067	1,1,2 TRICHLOROETHANE	LT	0.5000	5.0000	ug/L	0.5000
0068	TETRACHLOROETHYLENE	LT	0.5000	5.0000	ug/L	0.5000
0071	CHLOROBENZENE	LT	0.5000	100.0000	ug/L	0.5000
0072	1,1,1,2 TETRACHLOROETHANE	LT	0.5000		ug/L	0.5000
0073	ETHYLBENZENE	LT	0.5000	700.0000	ug/L	0.5000

Records 1 - 25 of 46

Washington State Department of Health

Division of Environmental Health
Office of Drinking Water

Help

View Sample Detail - WSID 99800W - ZILLAH, CITY OF

Collect Date	9/23/2010
Lab Number	089
Lab Name	Water Management Laboratory Inc
Sample Number	79983
Source	02
Analyte Group	VOC-VOLATILE ORGANIC CONTAMINANTS
Test Panel	VOC1-VOLATILE ORGANIC
Sample Location	third ave well
Sample Type	Pre-Treatment / Raw

Analyte DOH Num	Analyte Name	Result Range	Result Quantity	Maximum Contaminant Level	Units	State Reporting Limit
0102	EDB (ETHYLENE DIBROMIDE)	LT	0.5000	0.0500	ug/L	0.5000
0103	DBCP	LT	0.5000	0.2000	ug/L	0.5000
0074	M/P XYLENES (MCL FOR TOTAL)	LT	0.5000		ug/L	0.5000
0075	O- XYLENE (MCL FOR TOTAL)	LT	0.5000		ug/L	0.5000
0076	STYRENE	LT	0.5000	100.0000	ug/L	0.5000
0078	BROMOBENZENE	LT	0.5000		ug/L	0.5000
0079	1,2,3 TRICHLOROPROPANE	LT	0.5000		ug/L	0.5000
0081	O- CHLOROTOLUENE	LT	0.5000		ug/L	0.5000
0084	1,2 DICHLOROBENZENE	LT	0.5000	600.0000	ug/L	0.5000
0085	TRICHLOROFLUOROMETHANE	LT	0.5000		ug/L	0.5000
0086	BROMOCHLOROMETHANE	LT	0.5000		ug/L	0.5000
0089	1,3,5 TRIMETHYLBENZENE	LT	0.5000		ug/L	0.5000
0091	1,2,4 TRIMETHYLBENZENE	LT	0.5000		ug/L	0.5000
0092	SEC- BUTYLBENZENE	LT	0.5000		ug/L	0.5000
0093	P-ISOPROPYLTOLUENE	LT	0.5000		ug/L	0.5000
0094	N-BUTYLBENZENE	LT	0.5000		ug/L	0.5000
0095	1,2,4 TRICHLOROBENZENE	LT	0.5000	70.0000	ug/L	0.5000
0096	NAPHTHALENE	LT	0.5000		ug/L	0.5000
0104	DICHLORODIFLUOROMETHANE	LT	0.5000		ug/L	0.5000
0160	TOTAL XYLENES	LT	0.5000	10000.0000	ug/L	0.5000
0031	TOTAL TRIHALOMETHANE	ND		80.0000	ug/L	

Records 26 - 46 of 46

Home Page | Find Water Systems | Find Water Quality | Downloads/Reports

DOH Home | Community and Environment | Drinking Water Home | Drinking Water Contacts
Access Local Health | Privacy Notice | Disclaimer/Copyright Information

Links to external resources are provided as a public service and do not imply endorsement by the Washington State Department of Health

Department of Health, Office of Drinking Water

Street Address:
243 Israel Road S.E. 2nd floor
Tumwater, WA 98501

Mail:
PO BOX 47822
Olympia, WA 98504-7822

Phone: (360) 236-3100

Send inquiries about DOH and its programs to the Health Consumer Assistance Office
Comments or questions regarding this Web site? Send email to Environmental Health Application Testing and Support or call 360-236-3113.

Washington State Department of Health

Division of Environmental Health
Office of Drinking Water

View Sample Detail - WSID 99800W - ZILLAH, CITY OF

Collect Date	9/20/2006
Lab Number	089
Lab Name	Water Management Laboratory Inc
Sample Number	73873
Source	02
Analyte Group	VOC-VOLATILE ORGANIC CONTAMINANTS
Test Panel	VOC1-VOLATILE ORGANIC
Sample Location	whd

Analyte DOH Num	Analyte Name	Result Range	Result Quantity	Maximum Contaminant Level	Units	State Reporting Limit
0027	CHLOROFORM	LT	0.5000		ug/L	0.5000
0028	BROMODICHLOROMETHANE	LT	0.5000		ug/L	0.5000
0029	DIBROMOCHLOROMETHANE	LT	0.5000		ug/L	0.5000
0030	BROMOFORM	LT	0.5000		ug/L	0.5000
0045	VINYL CHLORIDE	LT	0.5000	2.0000	ug/L	0.5000
0046	1,1 DICHLOROETHYLENE	LT	0.5000	7.0000	ug/L	0.5000
0047	1,1,1 TRICHLOROETHANE	LT	0.5000	200.0000	ug/L	0.5000
0048	CARBON TETRACHLORIDE	LT	0.5000	5.0000	ug/L	0.5000
0049	BENZENE	LT	0.5000	5.0000	ug/L	0.5000
0050	1,2 DICHLOROETHANE	LT	0.5000	5.0000	ug/L	0.5000
0051	TRICHLOROETHYLENE	LT	0.5000	5.0000	ug/L	0.5000
0052	1,4 DICHLOROBENZENE	LT	0.5000	75.0000	ug/L	0.5000
0053	CHLOROMETHANE	LT	0.5000		ug/L	0.5000
0054	BROMOMETHANE	LT	0.5000		ug/L	0.5000
0055	CHLOROETHANE	LT	0.5000		ug/L	0.5000
0056	METHYLENE CHLORIDE (DICHLOROMETHANE)	LT	0.5000	5.0000	ug/L	0.5000
0057	TRANS- 1,2 DICHLOROETHYLENE	LT	0.5000	100.0000	ug/L	0.5000
0058	1,1 DICHLOROETHANE	LT	0.5000		ug/L	0.5000
0059	2,2 DICHLOROPROPANE	LT	0.5000		ug/L	0.5000
0060	CIS- 1,2 DICHLOROETHYLENE	LT	0.5000	70.0000	ug/L	0.5000

<< FIRST < PREV > NEXT >> LAST

Records 1 - 20 of 61

Washington State Department of Health

Division of Environmental Health
Office of Drinking Water

View Sample Detail - WSID 99800W - ZILLAH, CITY OF

Collect Date	9/20/2006
Lab Number	089
Lab Name	Water Management Laboratory Inc
Sample Number	73873
Source	02
Analyte Group	VOC-VOLATILE ORGANIC CONTAMINANTS
Test Panel	VOC1-VOLATILE ORGANIC
Sample Location	whd

Analyte DOH Num	Analyte Name	Result Range	Result Quantity	Maximum Contaminant Level	Units	State Reporting Limit
0062	1,1 DICHLOROPROPENE	LT	0.5000		ug/L	0.5000
0063	1,2 DICHLOROPROPANE	LT	0.5000	5.0000	ug/L	0.5000
0064	DIBROMOMETHANE	LT	0.5000		ug/L	0.5000
0065	CIS- 1,3 DICHLOROPROPENE	LT	0.5000		ug/L	0.5000
0066	TOLUENE	LT	0.5000	1000.0000	ug/L	0.5000
0067	1,1,2 TRICHLOROETHANE	LT	0.5000	5.0000	ug/L	0.5000
0068	TETRACHLOROETHYLENE	LT	0.5000	5.0000	ug/L	0.5000
0069	TRANS- 1,3 DICHLOROPROPENE	LT	0.5000		ug/L	0.5000
0070	1,3 DICHLOROPROPANE	LT	0.5000		ug/L	0.5000
0071	CHLOROBENZENE	LT	0.5000	100.0000	ug/L	0.5000
0072	1,1,1,2 TETRACHLOROETHANE	LT	0.5000		ug/L	0.5000
0073	ETHYLBENZENE	LT	0.5000	700.0000	ug/L	0.5000
0074	M/P XYLENES (MCL FOR TOTAL)	LT	0.5000		ug/L	0.5000
0075	O- XYLENE (MCL FOR TOTAL)	LT	0.5000		ug/L	0.5000
0076	STYRENE	LT	0.5000	100.0000	ug/L	0.5000
0078	BROMOBENZENE	LT	0.5000		ug/L	0.5000
0079	1,2,3 TRICHLOROPROPANE	LT	0.5000		ug/L	0.5000
0080	1,1,2,2 TETRACHLOROETHANE	LT	0.5000		ug/L	0.5000
0081	O- CHLOROTOLUENE	LT	0.5000		ug/L	0.5000
0082	P- CHLOROTOLUENE	LT	0.5000		ug/L	0.5000

<< FIRST < PREV > NEXT >> LAST
Records 21 - 40 of 61

Links to external resources are provided as a public service and do not imply endorsement by the Washington State Department of Health

Washington State Department of Health

Division of Environmental Health
Office of Drinking Water

View Sample Detail - WSID 99800W - ZILLAH, CITY OF

Collect Date	9/20/2006
Lab Number	089
Lab Name	Water Management Laboratory Inc
Sample Number	73873
Source	02
Analyte Group	VOC-VOLATILE ORGANIC CONTAMINANTS
Test Panel	VOC1-VOLATILE ORGANIC
Sample Location	whd

Analyte DOH Num	Analyte Name	Result Range	Result Quantity	Maximum Contaminant Level	Units	State Reporting Limit
0102	EDB (ETHYLENE DIBROMIDE)	LT	0.5000	0.0500	ug/L	0.5000
0103	DBCP	LT	0.5000	0.2000	ug/L	0.5000
0083	M- DICHLOROBENZENE	LT	0.5000		ug/L	0.5000
0084	1,2 DICHLOROBENZENE	LT	0.5000	600.0000	ug/L	0.5000
0085	TRICHLOROFLUOROMETHANE	LT	0.5000		ug/L	0.5000
0086	BROMOCHLOROMETHANE	LT	0.5000		ug/L	0.5000
0087	ISOPROPYLBENZENE	LT	0.5000		ug/L	0.5000
0088	N-PROPYLBENZENE	LT	0.5000		ug/L	0.5000
0089	1,3,5 TRIMETHYLBENZENE	LT	0.5000		ug/L	0.5000
0090	TERT- BUTYLBENZENE	LT	0.5000		ug/L	0.5000
0091	1,2,4 TRIMETHYLBENZENE	LT	0.5000		ug/L	0.5000
0092	SEC- BUTYLBENZENE	LT	0.5000		ug/L	0.5000
0093	P-ISOPROPYLTOLUENE	LT	0.5000		ug/L	0.5000
0094	N-BUTYLBENZENE	LT	0.5000		ug/L	0.5000
0095	1,2,4 TRICHLOROBENZENE	LT	0.5000	70.0000	ug/L	0.5000
0096	NAPHTHALENE	LT	0.5000		ug/L	0.5000
0097	HEXACHLOROBUTADIENE	LT	0.5000		ug/L	0.5000
0098	1,2,3 TRICHLOROBENZENE	LT	0.5000		ug/L	0.5000
0104	DICHLORODIFLUOROMETHANE	LT	0.5000		ug/L	0.5000
0154	1,3 DICHLOROPROPENE	LT	0.5000		ug/L	0.5000

<< FIRST < PREV > NEXT >> LAST

Records 41 - 61 of 61

Links to external resources are provided as a public service and do not imply endorsement by the Washington State Department of Health

Washington State Department of Health

Division of Environmental Health
Office of Drinking Water

View Sample Detail - WSID 99800W - ZILLAH, CITY OF

Collect Date	9/20/2006
Lab Number	089
Lab Name	Water Management Laboratory Inc
Sample Number	73873
Source	02
Analyte Group	VOC-VOLATILE ORGANIC CONTAMINANTS
Test Panel	VOC1-VOLATILE ORGANIC
Sample Location	whd

Analyte DOH Num	Analyte Name	Result Range	Result Quantity	Maximum Contaminant Level	Units	State Reporting Limit
0160	TOTAL XYLENES	LT	0.5000	1000.0000	ug/L	0.5000

<< FIRST < PREV > NEXT >> LAST

Records 61 - 61 of 61

Home Page | Find Water Systems | Find Water Quality | Downloads/Reports

DOH Home | Division of Environmental Health | Drinking Water Home | Drinking Water Contacts
Access Local Health | Privacy Notice | Disclaimer/Copyright Information

Links to external resources are provided as a public service and do not imply endorsement by the Washington State Department of Health

Office of Drinking Water
243 Israel Road SE
P.O. Box 47849
Tumwater, WA 98501
(360) 236-3113

Send inquiries about DOH and its programs to the Health Consumer Assistance Office
Comments or questions regarding this Web site? Send mail to ODW Help Desk.

Last Update : 07/21/2006

5755 8th Street East • Tacoma, WA 98424 • (253) 922-2310 • FAX (253) 922-5047

03C - 9909
115134-2

VOLATILE ORGANIC CHEMICALS (VOCs) ANALYSIS REPORT
EPA TEST METHOD - 524.2

System ID No.: 99000W	System Name: City of Zillah		
Lab/Sample No: 10725499	Date Collected: 7/24/03		DOH Source No: S02
Multiple Source Nos:	Sample Type:		Sample Purpose: C
Date Received: 7-29-03	Date Reported: 08-12-03	Supervisor:	
	Date Analyzed: 08-02-03 & 08	Analyst:	
County: Yakima		Group: (A) B Other	
Sample Location: 3rd Ave Well			
Send Report To: DOH CAT	Bill To: CAT		

DOH #	ANALYTES	RESULTS	UNITS	SRL	TRIGGER	MCL	EXCEEDS		FLAG
	EPA REGULATED						Trigger?	MCL?	
45	Vinyl Chloride	ND	µg/l	0.5	0.5	2.0	No	No	
46	1,1 - Dichloroethylene	ND	µg/l	0.5	0.5	7.0	No	No	
47	1,1,1 - Trichloroethane	ND	µg/l	0.5	0.5	200	No	No	
48	Carbon Tetrachloride	ND	µg/l	0.5	0.5	5.0	No	No	
49	Benzene	ND	µg/l	0.5	0.5	5.0	No	No	
50	1,2 - Dichloroethane	ND	µg/l	0.5	0.5	5.0	No	No	
[illegible]	Trichloroethylene	ND	µg/l	0.5	0.5	5.0	No	No	
	1,4 - Dichlorobenzene	ND	µg/l	0.5	0.5	75	No	No	
56	Dichloromethane	ND	µg/l	0.5	0.5	5.0	No	No	
57	trans - 1,2 - Dichloroethylene	ND	µg/l	0.5	0.5	100	No	No	
60	cis - 1,2 - Dichloroethylene	ND	µg/l	0.5	0.5	70	No	No	
63	1,2 - Dichloropropane	ND	µg/l	0.5	0.5	5.0	No	No	
66	Toluene	ND	µg/l	0.5	0.5	1000	No	No	
67	1,1,2 - Trichloroethane	ND	µg/l	0.5	0.5	5.0	No	No	
68	Tetrachloroethylene	ND	µg/l	0.5	0.5	5.0	No	No	
71	Chlorobenzene	ND	µg/l	0.5	0.5	100	No	No	
73	Ethylbenzene	ND	µg/l	0.5	0.5	700	No	No	
76	Styrene	ND	µg/l	0.5	0.5	100	No	No	
84	1,2 - Dichlorobenzene	ND	µg/l	0.5	0.5	600	No	No	
95	1,2,4 - Trichlorobenzene	ND	µg/l	0.5	0.5	70	No	No	
160	Total Xylenes	~~NA ND~~ 12 µg/l	µg/l	0.5	0.5	10000	~~No~~	~~No~~	
74	m/p Xylenes (MCL For Total)	ND	µg/l	0.5	0.5		No	ND	
75	o- Xylene (MCL For Total)	ND	µg/l	0.5	0.5		No	ND	
	EPA UNREGULATED								
27	Chloroform	ND	µg/l	0.5	0.5		No		
28	Bromodichloromethane	ND	µg/l	0.5	0.5		No		
29	Chlorodibromomethane	ND	µg/l	0.5	0.5		No		
30	Bromoform	ND	µg/l	0.5	0.5		No		
3	Chloromethane	ND	µg/l	0.5	0.5		No		
54	Bromomethane	ND	µg/l	0.5	0.5		No		
55	Chloroethane	ND	µg/l	0.5	0.5		No		

DOH #	ANALYTES	RESULTS	UNITS	SRL	TRIGGER	MCL	EXCEEDS		FLAG
	EPA UNREGULATED (*Continued*)						Trigger?	MCL?	
58	1,1 - Dichloroethane	ND	µg/l	0.5	0.5		No		
	2,2 Dichloropropane	ND	µg/l	0.5	0.5		No		
62	1,1 Dichloropropene	ND	µg/l	0.5	0.5		No		
64	Dibromomethane	ND	µg/l	0.5	0.5		No		
70	1,3 - Dichloropropane	ND	µg/l	0.5	0.5		No		
72	1,1,1,2 - Tetrachloroethane	ND	µg/l	0.5	0.5		No		
78	Bromobenzene	ND	µg/l	0.5	0.5		No		
79	1,2,3 - Trichloropropane	ND	µg/l	0.5	0.5		No		
80	1,1,2,2 - Tetrachloroethane	ND	µg/l	0.5	0.5		No		
81	o - Chlorotoluene	ND	µg/l	0.5	0.5		No		
82	p- Chlorotoluene	ND	µg/l	0.5	0.5		No		
83	m - Dichlorobenzene	ND	µg/l	0.5	0.5		No		
154	1,3-Dichloropropene	~~ND~~ NA 12 Days	µg/l	0.5	0.5				
	STATE UNREGULATED								
65	cis - 1,3 - Dichloropropene	ND	µg/l	0.5	0.5		No		
69	trans - 1,3 - Dichloropropene	ND	µg/l	0.5	0.5		No		
85	Fluorotrichloromethane	ND	µg/l	0.5	0.5		No		
86	Bromochloromethane	ND	µg/l	0.5	0.5		No		
87	Isopropylbenzene	ND	µg/l	0.5	0.5		No		
88	n - Propylbenzene	ND	µg/l	0.5	0.5		No		
89	1,3,5 Trimethylbenzene	ND	µg/l	0.5	0.5		No		
90	tert - Butylbenzene	ND	µg/l	0.5	0.5		No		
	1,2,4 - Trimethylbenzene	ND	µg/l	0.5	0.5		No		
	sec - Butylbenzene	ND	µg/l	0.5	0.5		No		
93	p - Isopropyltoluene	ND	µg/l	0.5	0.5		No		
94	n - Butylbenzene	ND	µg/l	0.5	0.5		No		
96	Napthalene	ND	µg/l	0.5	0.5		No		
97	Hexachlorobutadiene	ND	µg/l	0.5	0.5		No		
98	1,2,3 - Trichlorobenzene	ND	µg/l	0.5	0.5		No		
102	EDB (Scan Confirm By 504.1 Only)	ND	µg/l	0.5	0.5		No		
103	DBCP (Scan Confirm By 504.1 Only)	ND	µg/l	0.5	0.5		No		
162	Dichlorodifluoromethane	ND	µg/l	0.5	0.5		No		

NOTES:

SRL (State Reporting Level): indicates the minimum reporting level required by the Washington Department of Health (DOH).

Trigger Level: DOH Drinking Water response level. Systems with compounds detected at concentrations in excess of this level are required to take additional samples. Contact your regional DOH office for further information.

MCL (maximum contaminant level): If the contaminant amount exceeds the MCL, immediately contact your regional DOH office.

NA (Not Analyzed): in the results column indicates this compound was not included in the current analysis.

ND (Not Detected): in the results column indicates this compound was analyzed and not detected at a level greater than or equal to the SRL.

< (0.001): indicates the compound was not detected in the sample at or above the concentration indicated.

C3: Second analysis confirmation was performed. The relative percent difference value (RPD) between the results on the two columns was evaluated and determined to be < 30%.

C4: Second analysis confirmation was performed. The RPD between the results on the two columns was evaluated and determined to be > 30%. The original analysis was reported unless anomalies were noted.

nents:

Laucks Since 1908
Testing Laboratories, Inc.
940 South Harney St., Seattle, WA 98108 (206) 767-5060 FAX (206) 767-5063
Chemistry, Microbiology, and Technical Services

VOLATILE ORGANIC CHEMICALS (VOCs) ANALYSIS REPORT
EPA TEST METHOD - 524.2
For Sample 0209284-02

System ID No.: 99800W System name: CITY OF ZILLAH
Lab/Sample No.: 08185845 Date Collected: 09/12/02 DOH Source No.: S02
Multiple Source Nos.: _____ Sample Type: B Sample Purpose: C
Date Received: 09/16/02 Date Reported: 09/26/02 Supervisor: MC
Date Analyzed: 09/19/02 Analyst: ER
County: YAKIMA Group: A
Sample Location: 3RD AVE WELL
Send Report To: City of Zillah Bill To: City of Zillah

DOH#	ANALYTES	RESULTS	UNITS	SRL	TRIGGER	MCL	EXCEEDS Trigger?	EXCEEDS MCL?
	EPA REGULATED							
45	Vinyl Chloride	ND	ug/L	0.5	0.5	2.0		
46	1,1-Dichloroethylene	ND	ug/L	0.5	0.5	7.0		
47	1,1,1-Trichloroethane	ND	ug/L	0.5	0.5	200		
48	Carbon Tetrachloride	ND	ug/L	0.5	0.5	5.0		
49	Benzene	ND	ug/L	0.5	0.5	5.0		
50	1,2-Dichloroethane	ND	ug/L	0.5	0.5	5.0		
51	Trichloroethylene	ND	ug/L	0.5	0.5	5.0		
52	1,4-Dichlorobenzene	ND	ug/L	0.5	0.5	75		
56	Dichloromethane	ND	ug/L	0.5	0.5	5.0		
57	trans-1,2-Dichloroethylene	ND	ug/L	0.5	0.5	100		
60	cis-1,2-Dichloroethylene	ND	ug/L	0.5	0.5	70		
63	1,2-Dichloropropane	ND	ug/L	0.5	0.5	5.0		
66	Toluene	ND	ug/L	0.5	0.5	1000		
67	1,1,2-Trichloroethane	ND	ug/L	0.5	0.5	5.0		
68	Tetrachloroethylene	ND	ug/L	0.5	0.5	5.0		
71	Chlorobenzene	ND	ug/L	0.5	0.5	100		
73	Ethylbenzene	ND	ug/L	0.5	0.5	700		
76	Styrene	ND	ug/L	0.5	0.5	100		
84	1,2-Dichlorobenzene	ND	ug/L	0.5	0.5	600		
95	1,2,4-Trichlorobenzene	ND	ug/L	0.5	0.5	70		
160	Total Xylenes	ND	ug/L	0.5	0.5	10000		
74	m/p-Xylenes (MCL For Total)	ND	ug/L	0.5	0.5			
75	o-Xylene (MCL For Total)	ND	ug/L	0.5	0.5			
	EPA UNREGULATED							
27	Chloroform	ND	ug/L	0.5	0.5			
28	Bromodichloromethane	ND	ug/L	0.5	0.5			
29	Chlorodibromomethane	ND	ug/L	0.5	0.5			
30	Bromoform	ND	ug/L	0.5	0.5			
53	Chloromethane	ND	ug/L	0.5	0.5			
54	Bromomethane	ND	ug/L	0.5	0.5			
55	Chloroethane	ND	ug/L	0.5	0.5			

This report is submitted for the exclusive use of the person, partnership, or corporation to whom it is addressed. Subsequent use of the name of this company or any member of its staff in connection with the advertising or sale of any product or process will be granted only on contract. This company accepts no responsibility except for the due performance of inspection and/or analysis in good faith and according to the rules of the trade and of science.

Laucks Since 1908
Testing Laboratories, Inc.
940 South Harney St., Seattle, WA 98108 (206) 767-5060 FAX (206) 767-5063

Chemistry, Microbiology, and Technical Services

Sample: 0209284-02

DOH#	ANALYTES	RESULTS	UNITS	SRL	TRIGGER	MCL	EXCEEDS Trigger?	EXCEEDS MCL?
	EPA UNREGULATED (Continued)							
58	1,1-Dichloroethane	ND	ug/L	0.5	0.5			
59	2,2-Dichloropropane	ND	ug/L	0.5	0.5			
62	1,1-Dichloropropene	ND	ug/L	0.5	0.5			
64	Dibromomethane	ND	ug/L	0.5	0.5			
70	1,3-Dichloropropane	ND	ug/L	0.5	0.5			
72	1,1,1,2-Tetrachloroethane	ND	ug/L	0.5	0.5			
78	Bromobenzene	ND	ug/L	0.5	0.5			
79	1,2,3-Trichloropropane	ND	ug/L	0.5	0.5			
80	1,1,2,2-Tetrachloroethane	ND	ug/L	0.5	0.5			
81	o-Chlorotoluene	ND	ug/L	0.5	0.5			
82	p-Chlorotoluene	ND	ug/L	0.5	0.5			
83	m-Dichlorobenzene	ND	ug/L	0.5	0.5			
154	1,3-Dichloropropene	ND	ug/L	0.5	0.5			
	STATE UNREGULATED							
65	cis-1,3-Dichloropropene	ND	ug/L	0.5	0.5			
69	trans-1,3-Dichloropropene	ND	ug/L	0.5	0.5			
85	Fluorotrichloromethane	ND	ug/L	0.5	0.5			
86	Bromochloromethane	ND	ug/L	0.5	0.5			
87	Isopropylbenzene	ND	ug/L	0.5	0.5			
88	n-Propylbenzene	ND	ug/L	0.5	0.5			
89	1,3,5-Trimethylbenzene	ND	ug/L	0.5	0.5			
90	tert-Butylbenzene	ND	ug/L	0.5	0.5			
91	1,2,4-Trimethylbenzene	ND	ug/L	0.5	0.5			
92	sec-Butylbenzene	ND	ug/L	0.5	0.5			
93	p-Isopropyltoluene	ND	ug/L	0.5	0.5			
94	n-Butylbenzene	ND	ug/L	0.5	0.5			
96	Naphthalene	ND	ug/L	0.5	0.5			
97	Hexachlorobutadiene	ND	ug/L	0.5	0.5			
98	1,2,3-Trichlorobenzene	ND	ug/L	0.5	0.5			
102	EDB (Scan Confirm by 504.1	ND	ug/L	0.5	0.5			
103	DBCP (Scan Confirm By 504.1	ND	ug/L	0.5	0.5			
162	Dichlorodifluoromethane	ND	ug/L	0.5	0.5			

NOTES:

SRL (State Reporting Level): indicates the minimum reporting level required by the Washington Department of Health (DOH).

Trigger Level: DOH Drinking Water response level. Systems with compounds detected at concentrations in excess of this level are required to take additional samples. Contact your regional DOH office.

NA (Not Analyzed): in the results column indicates this compound was not included in the current analyis.

ND (Not Detected): in the results column indicates this compound was analyzed and not detected at a level greater than or equal to the SRL.

<(0.001): indicates the compound was not detected in the sample at or above the concentration indicated.

Comments:

This report is submitted for the exclusive use of the person, partnership, or corporation to whom it is addressed. Subsequent use of the name of this company or any member of its staff in connection with the advertising or sale of any product or process will be granted only on contract. This company accepts no responsibility except for the due performance of inspection and/or analysis in good faith and according to the rules of the trade and of science.

Laucks Since 1908
Testing Laboratories, Inc.
940 South Harney St., Seattle, WA 98108 (206) 767-5060 FAX (206) 767-5063

Chemistry, Microbiology, and Technical Services

VOLATILE ORGANIC CHEMICALS (VOCs) ANALYSIS REPORT
EPA TEST METHOD - 524.2
For Sample 0002189-02

System ID No.: 99800W System name: City of Zillah
Lab/Sample No.: 08167859 Date Collected: 02/03/00 DOH Source No.: S02
Multiple Source Nos.: _____ Sample Type: U Sample Purpose: C
Date Received: 02/03/00 Date Reported: 02/28/00 Supervisor: MC
Date Analyzed: 02/15/00 Analyst: JM
County: YAKIMA Group: A
Sample Location: 3rd Ave
Send Report To: City of Zillah Bill To: City of Zillah

DOH#	ANALYTES	RESULTS	UNITS	SRL	TRIGGER	MCL	EXCEEDS Trigger?	EXCEEDS MCL?
	EPA REGULATED							
45	Vinyl Chloride	ND	ug/L	0.5	0.5	2.0		
46	1,1-Dichloroethylene	ND	ug/L	0.5	0.5	7.0		
47	1,1,1-Trichloroethane	ND	ug/L	0.5	0.5	200		
48	Carbon Tetrachloride	ND	ug/L	0.5	0.5	5.0		
49	Benzene	ND	ug/L	0.5	0.5	5.0		
50	1,2-Dichloroethane	ND	ug/L	0.5	0.5	5.0		
51	Trichloroethylene	ND	ug/L	0.5	0.5	5.0		
52	1,4-Dichlorobenzene	ND	ug/L	0.5	0.5	75		
56	Dichloromethane	ND	ug/L	0.5	0.5	5.0		
57	trans-1,2-Dichloroethylene	ND	ug/L	0.5	0.5	100		
60	cis-1,2-Dichloroethylene	ND	ug/L	0.5	0.5	70		
63	1,2-Dichloropropane	ND	ug/L	0.5	0.5	5.0		
66	Toluene	ND	ug/L	0.5	0.5	1000		
67	1,1,2-Trichloroethane	ND	ug/L	0.5	0.5	5.0		
68	Tetrachloroethylene	ND	ug/L	0.5	0.5	5.0		
71	Chlorobenzene	ND	ug/L	0.5	0.5	100		
73	Ethylbenzene	ND	ug/L	0.5	0.5	700		
76	Styrene	ND	ug/L	0.5	0.5	100		
84	1,2-Dichlorobenzene	ND	ug/L	0.5	0.5	600		
95	1,2,4-Trichlorobenzene	ND	ug/L	0.5	0.5	70		
160	Total Xylenes	ND	ug/L	0.5	0.5	10000		
74	m/p-Xylenes (MCL For Total)	ND	ug/L	0.5	0.5			
75	o-Xylene (MCL For Total)	ND	ug/L	0.5	0.5			
	EPA UNREGULATED							
27	Chloroform	ND	ug/L	0.5	0.5			
28	Bromodichloromethane	ND	ug/L	0.5	0.5			
29	Chlorodibromomethane	ND	ug/L	0.5	0.5			
30	Bromoform	ND	ug/L	0.5	0.5			
53	Chloromethane	ND	ug/L	0.5	0.5			
54	Bromomethane	ND	ug/L	0.5	0.5			
55	Chloroethane	ND	ug/L	0.5	0.5			

This report is submitted for the exclusive use of the person, partnership, or corporation to whom it is addressed. Subsequent use of the name of this company or any member of its staff in connection with the advertising or sale of any product or process will be granted only on contract. This company accepts no responsibility except for the due performance of inspection and/or analysis in good faith and according to the rules of the trade and of science.

Printed on Recycled Paper

Laucks Since 1908
Testing Laboratories, Inc.
940 South Harney St., Seattle, WA 98108 (206) 767-5060 FAX (206) 767-5063

Chemistry, Microbiology, and Technical Services

Sample: 0002189-02

DOH#	ANALYTES	RESULTS	UNITS	SRL	TRIGGER	MCL	EXCEEDS Trigger?	EXCEEDS MCL?
	EPA UNREGULATED (Continued)							
58	1,1-Dichloroethane	ND	ug/L	0.5	0.5			
59	2,2-Dichloropropane	ND	ug/L	0.5	0.5			
62	1,1-Dichloropropene	ND	ug/L	0.5	0.5			
64	Dibromomethane	ND	ug/L	0.5	0.5			
70	1,3-Dichloropropane	ND	ug/L	0.5	0.5			
72	1,1,1,2-Tetrachloroethane	ND	ug/L	0.5	0.5			
78	Bromobenzene	ND	ug/L	0.5	0.5			
79	1,2,3-Trichloropropane	ND	ug/L	0.5	0.5			
80	1,1,2,2-Tetrachloroethane	ND	ug/L	0.5	0.5			
81	o-Chlorotoluene	ND	ug/L	0.5	0.5			
82	p-Chlorotoluene	ND	ug/L	0.5	0.5			
83	m-Dichlorobenzene	ND	ug/L	0.5	0.5			
154	1,3-Dichloropropene	ND	ug/L	0.5	0.5			
	STATE UNREGULATED							
65	cis-1,3-Dichloropropene	ND	ug/L	0.5	0.5			
69	trans-1,3-Dichloropropene	ND	ug/L	0.5	0.5			
85	Fluorotrichloromethane	ND	ug/L	0.5	0.5			
86	Bromochloromethane	ND	ug/L	0.5	0.5			
87	Isopropylbenzene	ND	ug/L	0.5	0.5			
88	n-Propylbenzene	ND	ug/L	0.5	0.5			
89	1,3,5-Trimethylbenzene	ND	ug/L	0.5	0.5			
90	tert-Butylbenzene	ND	ug/L	0.5	0.5			
91	1,2,4-Trimethylbenzene	ND	ug/L	0.5	0.5			
92	sec-Butylbenzene	ND	ug/L	0.5	0.5			
93	p-Isopropyltoluene	ND	ug/L	0.5	0.5			
94	n-Butylbenzene	ND	ug/L	0.5	0.5			
96	Naphthalene	ND	ug/L	0.5	0.5			
97	Hexachlorobutadiene	ND	ug/L	0.5	0.5			
98	1,2,3-Trichlorobenzene	ND	ug/L	0.5	0.5			
102	EDB (Scan Confirm by 504.1	ND	ug/L	0.5	0.5			
103	DBCP (Scan Confirm By 504.1	ND	ug/L	0.5	0.5			
162	Dichlorodifluoromethane	ND	ug/L	0.5	0.5			

NOTES:

SRL (State Reporting Level): indicates the minimum reporting level required by the Washington Department of Health (DOH).

Trigger Level: DOH Drinking Water response level. Systems with compounds detected at concentrations in excess of this level are required to take additional samples. Contact your regional DOH office.

NA (Not Analyzed): in the results column indicates this compound was not included in the current analyis.

ND (Not Detected): in the results column indicates this compound was analyzed and not detected at a level greater than or equal to the SRL.

<(0.001): indicates the compound was not detected in the sample at or above the concentration indicated.

Comments:

This report is submitted for the exclusive use of the person, partnership, or corporation to whom it is addressed. Subsequent use of the name of this company or any member of its staff in connection with the advertising or sale of any product or process will be granted only on contract. This company accepts no responsibility except for the due performance of inspection and/or analysis in good faith and according to the rules of the trade and of science.

VOLATILE ORGANIC CHEMICAL ANALYSIS - WIPPCO WELL

Washington State Department of Health

Division of Environmental Health
Office of Drinking Water

Help

View Sample Detail - WSID 99800W - ZILLAH, CITY OF

Collect Date	4/12/2010
Lab Number	089
Lab Name	Water Management Laboratory Inc
Sample Number	78985
Source	03
Analyte Group	VOC-VOLATILE ORGANIC CONTAMINANTS
Test Panel	VOC1-VOLATILE ORGANIC
Sample Location	wippco well
Sample Type	Pre-Treatment / Raw

Analyte DOH Num	Analyte Name	Result Range	Result Quantity	Maximum Contaminant Level	Units	State Reporting Limit
0027	CHLOROFORM	LT	0.5000		ug/L	0.5000
0028	BROMODICHLOROMETHANE	LT	0.5000		ug/L	0.5000
0029	DIBROMOCHLOROMETHANE	LT	0.5000		ug/L	0.5000
0030	BROMOFORM	LT	0.5000		ug/L	0.5000
0045	VINYL CHLORIDE	LT	0.5000	2.0000	ug/L	0.5000
0046	1,1 DICHLOROETHYLENE	LT	0.5000	7.0000	ug/L	0.5000
0047	1,1,1 TRICHLOROETHANE	LT	0.5000	200.0000	ug/L	0.5000
0048	CARBON TETRACHLORIDE	LT	0.5000	5.0000	ug/L	0.5000
0049	BENZENE	LT	0.5000	5.0000	ug/L	0.5000
0050	1,2 DICHLOROETHANE	LT	0.5000	5.0000	ug/L	0.5000
0051	TRICHLOROETHYLENE	LT	0.5000	5.0000	ug/L	0.5000
0052	1,4 DICHLOROBENZENE	LT	0.5000	75.0000	ug/L	0.5000
0053	CHLOROMETHANE	LT	0.5000		ug/L	0.5000
0054	BROMOMETHANE	LT	0.5000		ug/L	0.5000
0056	METHYLENE CHLORIDE (DICHLOROMETHANE)	LT	0.5000	5.0000	ug/L	0.5000
0057	TRANS- 1,2 DICHLOROETHYLENE	LT	0.5000	100.0000	ug/L	0.5000
0058	1,1 DICHLOROETHANE	LT	0.5000		ug/L	0.5000
0060	CIS- 1,2 DICHLOROETHYLENE	LT	0.5000	70.0000	ug/L	0.5000
0063	1,2 DICHLOROPROPANE	LT	0.5000	5.0000	ug/L	0.5000
0066	TOLUENE	LT	0.5000	1000.0000	ug/L	0.5000
0067	1,1,2 TRICHLOROETHANE	LT	0.5000	5.0000	ug/L	0.5000
0068	TETRACHLOROETHYLENE	LT	0.5000	5.0000	ug/L	0.5000
0071	CHLOROBENZENE	LT	0.5000	100.0000	ug/L	0.5000
0072	1,1,1,2 TETRACHLOROETHANE	LT	0.5000		ug/L	0.5000
0073	ETHYLBENZENE	LT	0.5000	700.0000	ug/L	0.5000

Records 1 - 25 of 46

Washington State Department of Health

Division of Environmental Health
Office of Drinking Water

Help

View Sample Detail - WSID 99800W - ZILLAH, CITY OF

Collect Date	4/12/2010
Lab Number	089
Lab Name	Water Management Laboratory Inc
Sample Number	78985
Source	03
Analyte Group	VOC-VOLATILE ORGANIC CONTAMINANTS
Test Panel	VOC1-VOLATILE ORGANIC
Sample Location	wippco well
Sample Type	Pre-Treatment / Raw

Analyte DOH Num	Analyte Name	Result Range	Result Quantity	Maximum Contaminant Level	Units	State Reporting Limit
0102	EDB (ETHYLENE DIBROMIDE)	LT	0.5000	0.0500	ug/L	0.5000
0103	DBCP	LT	0.5000	0.2000	ug/L	0.5000
0074	M/P XYLENES (MCL FOR TOTAL)	LT	0.5000		ug/L	0.5000
0075	O- XYLENE (MCL FOR TOTAL)	LT	0.5000		ug/L	0.5000
0076	STYRENE	LT	0.5000	100.0000	ug/L	0.5000
0078	BROMOBENZENE	LT	0.5000		ug/L	0.5000
0079	1,2,3 TRICHLOROPROPANE	LT	0.5000		ug/L	0.5000
0081	O- CHLOROTOLUENE	LT	0.5000		ug/L	0.5000
0084	1,2 DICHLOROBENZENE	LT	0.5000	600.0000	ug/L	0.5000
0085	TRICHLOROFLUOROMETHANE	LT	0.5000		ug/L	0.5000
0086	BROMOCHLOROMETHANE	LT	0.5000		ug/L	0.5000
0089	1,3,5 TRIMETHYLBENZENE	LT	0.5000		ug/L	0.5000
0091	1,2,4 TRIMETHYLBENZENE	LT	0.5000		ug/L	0.5000
0092	SEC- BUTYLBENZENE	LT	0.5000		ug/L	0.5000
0093	P-ISOPROPYLTOLUENE	LT	0.5000		ug/L	0.5000
0094	N-BUTYLBENZENE	LT	0.5000		ug/L	0.5000
0095	1,2,4 TRICHLOROBENZENE	LT	0.5000	70.0000	ug/L	0.5000
0096	NAPHTHALENE	LT	0.5000		ug/L	0.5000
0104	DICHLORODIFLUOROMETHANE	LT	0.5000		ug/L	0.5000
0160	TOTAL XYLENES	LT	0.5000	10000.0000	ug/L	0.5000
0031	TOTAL TRIHALOMETHANE	ND		80.0000	ug/L	

Records 26 - 46 of 46

Links to external resources are provided as a public service and do not imply endorsement by the Washington State Department of Health

Department of Health, Office of Drinking Water

Street Address:
243 Israel Road S.E. 2nd floor
Tumwater, WA 98501

Mail:
PO BOX 47822
Olympia, WA 98504-7822

Phone: (360) 236-3100

Send inquiries about DOH and its programs to the Health Consumer Assistance Office
Comments or questions regarding this Web site? Send email to Environmental Health Application Testing and Support or call 360-236-3113.

Washington State Department of Health

Division of Environmental Health
Office of Drinking Water

View Sample Detail - WSID 99800W - ZILLAH, CITY OF

Collect Date	4/17/2006
Lab Number	089
Lab Name	Water Management Laboratory Inc
Sample Number	72923
Source	03
Analyte Group	VOC-VOLATILE ORGANIC CONTAMINANTS
Test Panel	VOC1-VOLATILE ORGANIC
Sample Location	wippco well/whd

Analyte DOH Num	Analyte Name	Result Range	Result Quantity	Maximum Contaminant Level	Units	State Reporting Limit
0027	CHLOROFORM	LT	0.5000		ug/L	0.5000
0028	BROMODICHLOROMETHANE	LT	0.5000		ug/L	0.5000
0029	DIBROMOCHLOROMETHANE	LT	0.5000		ug/L	0.5000
0030	BROMOFORM	LT	0.5000		ug/L	0.5000
0045	VINYL CHLORIDE	LT	0.5000	2.0000	ug/L	0.5000
0046	1,1 DICHLOROETHYLENE	LT	0.5000	7.0000	ug/L	0.5000
0047	1,1,1 TRICHLOROETHANE	LT	0.5000	200.0000	ug/L	0.5000
0048	CARBON TETRACHLORIDE	LT	0.5000	5.0000	ug/L	0.5000
0049	BENZENE	LT	0.5000	5.0000	ug/L	0.5000
0050	1,2 DICHLOROETHANE	LT	0.5000	5.0000	ug/L	0.5000
0051	TRICHLOROETHYLENE	LT	0.5000	5.0000	ug/L	0.5000
0052	1,4 DICHLOROBENZENE	LT	0.5000	75.0000	ug/L	0.5000
0053	CHLOROMETHANE	LT	0.5000		ug/L	0.5000
0054	BROMOMETHANE	LT	0.5000		ug/L	0.5000
0055	CHLOROETHANE	LT	0.5000		ug/L	0.5000
0056	METHYLENE CHLORIDE (DICHLOROMETHANE)	LT	0.5000	5.0000	ug/L	0.5000
0057	TRANS- 1,2 DICHLOROETHYLENE	LT	0.5000	100.0000	ug/L	0.5000
0058	1,1 DICHLOROETHANE	LT	0.5000		ug/L	0.5000
0059	2,2 DICHLOROPROPANE	LT	0.5000		ug/L	0.5000
0060	CIS- 1,2 DICHLOROETHYLENE	LT	0.5000	70.0000	ug/L	0.5000

<< FIRST < PREV > NEXT >> LAST

Records 1 - 20 of 61

Washington State Department of Health

Division of Environmental Health
Office of Drinking Water

View Sample Detail - WSID 99800W - ZILLAH, CITY OF

Collect Date	4/17/2006
Lab Number	089
Lab Name	Water Management Laboratory Inc
Sample Number	72923
Source	03
Analyte Group	VOC-VOLATILE ORGANIC CONTAMINANTS
Test Panel	VOC1-VOLATILE ORGANIC
Sample Location	wippco well/whd

Analyte DOH Num	Analyte Name	Result Range	Result Quantity	Maximum Contaminant Level	Units	State Reporting Limit
0062	1,1 DICHLOROPROPENE	LT	0.5000		ug/L	0.5000
0063	1,2 DICHLOROPROPANE	LT	0.5000	5.0000	ug/L	0.5000
0064	DIBROMOMETHANE	LT	0.5000		ug/L	0.5000
0065	CIS- 1,3 DICHLOROPROPENE	LT	0.5000		ug/L	0.5000
0066	TOLUENE	LT	0.5000	1000.0000	ug/L	0.5000
0067	1,1,2 TRICHLOROETHANE	LT	0.5000	5.0000	ug/L	0.5000
0068	TETRACHLOROETHYLENE	LT	0.5000	5.0000	ug/L	0.5000
0069	TRANS- 1,3 DICHLOROPROPENE	LT	0.5000		ug/L	0.5000
0070	1,3 DICHLOROPROPANE	LT	0.5000		ug/L	0.5000
0071	CHLOROBENZENE	LT	0.5000	100.0000	ug/L	0.5000
0072	1,1,1,2 TETRACHLOROETHANE	LT	0.5000		ug/L	0.5000
0073	ETHYLBENZENE	LT	0.5000	700.0000	ug/L	0.5000
0074	M/P XYLENES (MCL FOR TOTAL)	LT	0.5000		ug/L	0.5000
0075	O- XYLENE (MCL FOR TOTAL)	LT	0.5000		ug/L	0.5000
0076	STYRENE	LT	0.5000	100.0000	ug/L	0.5000
0078	BROMOBENZENE	LT	0.5000		ug/L	0.5000
0079	1,2,3 TRICHLOROPROPANE	LT	0.5000		ug/L	0.5000
0080	1,1,2,2 TETRACHLOROETHANE	LT	0.5000		ug/L	0.5000
0081	O- CHLOROTOLUENE	LT	0.5000		ug/L	0.5000
0082	P- CHLOROTOLUENE	LT	0.5000		ug/L	0.5000

<< FIRST < PREV > NEXT >> LAST

Records 21 - 40 of 61

Links to external resources are provided as a public service and do not imply endorsement by the Washington State Department of Health

Washington State Department of Health

Division of Environmental Health
Office of Drinking Water

View Sample Detail - WSID 99800W - ZILLAH, CITY OF

Collect Date	4/17/2006
Lab Number	089
Lab Name	Water Management Laboratory Inc
Sample Number	72923
Source	03
Analyte Group	VOC-VOLATILE ORGANIC CONTAMINANTS
Test Panel	VOC1-VOLATILE ORGANIC
Sample Location	wippco well/whd

Analyte DOH Num	Analyte Name	Result Range	Result Quantity	Maximum Contaminant Level	Units	State Reporting Limit
0102	EDB (ETHYLENE DIBROMIDE)	LT	0.5000	0.0500	ug/L	0.5000
0103	DBCP	LT	0.5000	0.2000	ug/L	0.5000
0083	M- DICHLOROBENZENE	LT	0.5000		ug/L	0.5000
0084	1,2 DICHLOROBENZENE	LT	0.5000	600.0000	ug/L	0.5000
0085	TRICHLOROFLUOROMETHANE	LT	0.5000		ug/L	0.5000
0086	BROMOCHLOROMETHANE	LT	0.5000		ug/L	0.5000
0087	ISOPROPYLBENZENE	LT	0.5000		ug/L	0.5000
0088	N-PROPYLBENZENE	LT	0.5000		ug/L	0.5000
0089	1,3,5 TRIMETHYLBENZENE	LT	0.5000		ug/L	0.5000
0090	TERT- BUTYLBENZENE	LT	0.5000		ug/L	0.5000
0091	1,2,4 TRIMETHYLBENZENE	LT	0.5000		ug/L	0.5000
0092	SEC- BUTYLBENZENE	LT	0.5000		ug/L	0.5000
0093	P-ISOPROPYLTOLUENE	LT	0.5000		ug/L	0.5000
0094	N-BUTYLBENZENE	LT	0.5000		ug/L	0.5000
0095	1,2,4 TRICHLOROBENZENE	LT	0.5000	70.0000	ug/L	0.5000
0096	NAPHTHALENE	LT	0.5000		ug/L	0.5000
0097	HEXACHLOROBUTADIENE	LT	0.5000		ug/L	0.5000
0098	1,2,3 TRICHLOROBENZENE	LT	0.5000		ug/L	0.5000
0104	DICHLORODIFLUOROMETHANE	LT	0.5000		ug/L	0.5000
0154	1,3 DICHLOROPROPENE	LT	0.5000		ug/L	0.5000

<< FIRST < PREV > NEXT >> LAST

Records 41 - 61 of 61

Links to external resources are provided as a public service and do not imply endorsement by the Washington State Department of Health

Washington State Department of Health

Division of Environmental Health
Office of Drinking Water

View Sample Detail - WSID 99800W - ZILLAH, CITY OF

Collect Date	4/17/2006
Lab Number	089
Lab Name	Water Management Laboratory Inc
Sample Number	72923
Source	03
Analyte Group	VOC-VOLATILE ORGANIC CONTAMINANTS
Test Panel	VOC1-VOLATILE ORGANIC
Sample Location	wippco well/whd

Analyte DOH Num	Analyte Name	Result Range	Result Quantity	Maximum Contaminant Level	Units	State Reporting Limit
0160	TOTAL XYLENES	LT	0.5000	1000.0000	ug/L	0.5000

<< FIRST < PREV > NEXT >> LAST
Records 61 - 61 of 61

Home Page | Find Water Systems | Find Water Quality | Downloads/Reports

DOH Home | Division of Environmental Health | Drinking Water Home | Drinking Water Contacts
Access Local Health | Privacy Notice | Disclaimer/Copyright Information

Links to external resources are provided as a public service and do not imply endorsement by the Washington State Department of Health

Office of Drinking Water
243 Israel Road SE
P.O. Box 47849
Tumwater, WA 98501
(360) 236-3113

Send inquiries about DOH and its programs to the Health Consumer Assistance Office
Comments or questions regarding this Web site? Send mail to ODW Help Desk.

Last Update : 07/21/2006

5755 8th Street East • Tacoma, WA 98424 • (253) 922-2310 • FAX (253) 922-5047

030-9990
5134-3.

VOLATILE ORGANIC CHEMICALS (VOCs) ANALYSIS REPORT
EPA TEST METHOD - 524.2

System ID No.: 99800 W	System Name: City of Zillah	
Lab/Sample No: 10725500	Date Collected:	DOH Source No: 503
Multiple Source Nos:	Sample Type:	Sample Purpose: C
Date Received: 7-29-03	Date Reported: 08-12-03	Supervisor:
	Date Analyzed: 08-02-03	Analyst:
County: YAKIMA	Group: (A) B Other	
Sample Location: Wipple well		
Send Report To: DOH CITY	Bill To: CITY	

DOH #	ANALYTES	RESULTS	UNITS	SRL	TRIGGER	MCL	EXCEEDS		FLAG
	EPA REGULATED						Trigger?	MCL?	
45	Vinyl Chloride	ND	µg/l	0.5	0.5	2.0	No	No	
46	1,1 - Dichloroethylene	ND	µg/l	0.5	0.5	7.0	No	No	
47	1,1,1 - Trichloroethane	ND	µg/l	0.5	0.5	200	No	No	
48	Carbon Tetrachloride	ND	µg/l	0.5	0.5	5.0	No	No	
49	Benzene	ND	µg/l	0.5	0.5	5.0	No	No	
50	1,2 - Dichloroethane	ND	µg/l	0.5	0.5	5.0	No	No	
	Trichloroethylene	ND	µg/l	0.5	0.5	5.0	No	No	
	1,4 - Dichlorobenzene	ND	µg/l	0.5	0.5	75	No	No	
56	Dichloromethane	ND	µg/l	0.5	0.5	5.0	No	No	
57	trans - 1,2 - Dichloroethylene	ND	µg/l	0.5	0.5	100	No	No	
60	cis - 1,2 - Dichloroethylene	ND	µg/l	0.5	0.5	70	No	No	
63	1,2 - Dichloropropane	ND	µg/l	0.5	0.5	5.0	No	No	
66	Toluene	ND	µg/l	0.5	0.5	1000	No	No	
67	1,1,2 - Trichloroethane	ND	µg/l	0.5	0.5	5.0	No	No	
68	Tetrachloroethylene	ND	µg/l	0.5	0.5	5.0	No	No	
71	Chlorobenzene	ND	µg/l	0.5	0.5	100	No	No	
73	Ethylbenzene	ND	µg/l	0.5	0.5	700	No	No	
76	Styrene	ND	µg/l	0.5	0.5	100	No	No	
84	1,2 - Dichlorobenzene	ND	µg/l	0.5	0.5	600	No	No	
95	1,2,4 - Trichlorobenzene	ND	µg/l	0.5	0.5	70	No	No	
160	Total Xylenes	~~ND~~ NA 0.7 µg/l	µg/l	0.5	0.5	10000	~~No~~	~~No~~	
74	m/p Xylenes (MCL For Total)	ND	µg/l	0.5	0.5		No	No	
75	o- Xylene (MCL For Total)	ND	µg/l	0.5	0.5		No	No	
	EPA UNREGULATED								
27	Chloroform	ND	µg/l	0.5	0.5		No		
28	Bromodichloromethane	ND	µg/l	0.5	0.5		No		
29	Chlorodibromomethane	ND	µg/l	0.5	0.5		No		
30	Bromoform	ND	µg/l	0.5	0.5		No		
3	Chloromethane	ND	µg/l	0.5	0.5		No		
54	Bromomethane	ND	µg/l	0.5	0.5		No		
55	Chloroethane	ND	µg/l	0.5	0.5		No		

DOH #	ANALYTES	RESULTS	UNITS	SRL	TRIGGER	MCL	EXCEEDS		FLAG
	EPA UNREGULATED (*Continued*)						Trigger?	MCL?	
58	1,1 - Dichloroethane	ND	µg/l	0.5	0.5		No		
	2,2 Dichloropropane	ND	µg/l	0.5	0.5		No		
62	1,1 Dichloropropene	ND	µg/l	0.5	0.5		No		
64	Dibromomethane	ND	µg/l	0.5	0.5		No		
70	1,3 - Dichloropropane	ND	µg/l	0.5	0.5		No		
72	1,1,1,2 - Tetrachloroethane	ND	µg/l	0.5	0.5		No		
78	Bromobenzene	ND	µg/l	0.5	0.5		No		
79	1,2,3 - Trichloropropane	ND	µg/l	0.5	0.5		No		
80	1,1,2,2 - Tetrachloroethane	ND	µg/l	0.5	0.5		No		
81	o - Chlorotoluene	ND	µg/l	0.5	0.5		No		
82	p- Chlorotoluene	ND	µg/l	0.5	0.5		No		
83	m - Dichlorobenzene	ND	µg/l	0.5	0.5		No		
154	1,3-Dichloropropene	ND	µg/l	0.5	0.5				
	STATE UNREGULATED								
65	cis - 1,3 - Dichloropropene	ND	µg/l	0.5	0.5		No		
69	trans - 1,3 - Dichloropropene	ND	µg/l	0.5	0.5		No		
85	Fluorotrichloromethane	ND	µg/l	0.5	0.5		No		
86	Bromochloromethane	ND	µg/l	0.5	0.5		No		
87	Isopropylbenzene	ND	µg/l	0.5	0.5		No		
88	n - Propylbenzene	ND	µg/l	0.5	0.5		No		
89	1,3,5 Trimethylbenzene	ND	µg/l	0.5	0.5		No		
90	tert - Butylbenzene	ND	µg/l	0.5	0.5		No		
	1,2,4 - Trimethylbenzene	ND	µg/l	0.5	0.5		No		
92	sec - Butylbenzene	ND	µg/l	0.5	0.5		No		
93	p - Isopropyltoluene	ND	µg/l	0.5	0.5		No		
94	n - Butylbenzene	ND	µg/l	0.5	0.5		No		
96	Napthalene	ND	µg/l	0.5	0.5		No		
97	Hexachlorobutadiene	ND	µg/l	0.5	0.5		No		
98	1,2,3 - Trichlorobenzene	ND	µg/l	0.5	0.5		No		
102	EDB (Scan Confirm By 504.1 Only)	ND	µg/l	0.5	0.5		No		
103	DBCP (Scan Confirm By 504.1 Only)	ND	µg/l	0.5	0.5		No		
162	Dichlorodifluoromethane	ND	µg/l	0.5	0.5		No		

NOTES:

SRL (State Reporting Level): indicates the minimum reporting level required by the Washington Department of Health (DOH).

Trigger Level: DOH Drinking Water response level. Systems with compounds detected at concentrations in excess of this level are required to take additional samples. Contact your regional DOH office for further information.

MCL (maximum contaminant level): If the contaminant amount exceeds the MCL, immediately contact your regional DOH office.

NA (Not Analyzed): in the results column indicates this compound was not included in the current analysis.

ND (Not Detected): in the results column indicates this compound was analyzed and not detected at a level greater than or equal to the SRL.

< (0.001): indicates the compound was not detected in the sample at or above the concentration indicated.

C3: Second analysis confirmation was performed. The relative percent difference value (RPD) between the results on the two columns was evaluated and determined to be < 30%.

C4: Second analysis confirmation was performed. The RPD between the results on the two columns was evaluated and determined to be > 30%. The original analysis was reported unless anomalies were noted.

nents:

Laucks Since 1908
Testing Laboratories, Inc.
940 South Harney St., Seattle, WA 98108 (206) 767-5060 FAX (206) 767-5063
Chemistry, Microbiology, and Technical Services

VOLATILE ORGANIC CHEMICALS (VOCs) ANALYSIS REPORT
EPA TEST METHOD - 524.2
For Sample 0209284-03

System ID No.: 99800W System name: CITY OF ZILLAH
Lab/Sample No.: 08185846 Date Collected: 09/12/02 DOH Source No.: S03
Multiple Source Nos.: _____ Sample Type: B Sample Purpose: C
Date Received: 09/16/02 Date Reported: 09/26/02 Supervisor: MC
Date Analyzed: 09/19/02 Analyst: ER
County: YAKIMA Group: A
Sample Location: WIPPCO WELL
Send Report To: City of Zillah Bill To: City of Zillah

DOH#	ANALYTES	RESULTS	UNITS	SRL	TRIGGER	MCL	EXCEEDS Trigger?	EXCEEDS MCL?
	EPA REGULATED							
45	Vinyl Chloride	ND	ug/L	0.5	0.5	2.0		
46	1,1-Dichloroethylene	ND	ug/L	0.5	0.5	7.0		
47	1,1,1-Trichloroethane	ND	ug/L	0.5	0.5	200		
48	Carbon Tetrachloride	ND	ug/L	0.5	0.5	5.0		
49	Benzene	ND	ug/L	0.5	0.5	5.0		
50	1,2-Dichloroethane	ND	ug/L	0.5	0.5	5.0		
51	Trichloroethylene	ND	ug/L	0.5	0.5	5.0		
52	1,4-Dichlorobenzene	ND	ug/L	0.5	0.5	75		
56	Dichloromethane	ND	ug/L	0.5	0.5	5.0		
57	trans-1,2-Dichloroethylene	ND	ug/L	0.5	0.5	100		
60	cis-1,2-Dichloroethylene	ND	ug/L	0.5	0.5	70		
63	1,2-Dichloropropane	ND	ug/L	0.5	0.5	5.0		
66	Toluene	ND	ug/L	0.5	0.5	1000		
67	1,1,2-Trichloroethane	ND	ug/L	0.5	0.5	5.0		
68	Tetrachloroethylene	ND	ug/L	0.5	0.5	5.0		
71	Chlorobenzene	ND	ug/L	0.5	0.5	100		
73	Ethylbenzene	ND	ug/L	0.5	0.5	700		
76	Styrene	ND	ug/L	0.5	0.5	100		
84	1,2-Dichlorobenzene	ND	ug/L	0.5	0.5	600		
95	1,2,4-Trichlorobenzene	ND	ug/L	0.5	0.5	70		
160	Total Xylenes	ND	ug/L	0.5	0.5	10000		
74	m/p-Xylenes (MCL For Total)	ND	ug/L	0.5	0.5			
75	o-Xylene (MCL For Total)	ND	ug/L	0.5	0.5			
	EPA UNREGULATED							
27	Chloroform	ND	ug/L	0.5	0.5			
28	Bromodichloromethane	ND	ug/L	0.5	0.5			
29	Chlorodibromomethane	ND	ug/L	0.5	0.5			
30	Bromoform	ND	ug/L	0.5	0.5			
53	Chloromethane	ND	ug/L	0.5	0.5			
54	Bromomethane	ND	ug/L	0.5	0.5			
55	Chloroethane	ND	ug/L	0.5	0.5			

This report is submitted for the exclusive use of the person, partnership, or corporation to whom it is addressed. Subsequent use of the name of this company or any member of its staff in connection with the advertising or sale of any product or process will be granted only on contract. This company accepts no responsibility except for the due performance of inspection and/or analysis in good faith and according to the rules of the trade and of science.

Laucks Since 1908
Testing Laboratories, Inc.
940 South Harney St., Seattle, WA 98108 (206) 767-5060 FAX (206) 767-5063

Chemistry, Microbiology, and Technical Services

Sample: 0209284-03

DOH#	ANALYTES	RESULTS	UNITS	SRL	TRIGGER	MCL	EXCEEDS Trigger?	EXCEEDS MCL?
	EPA UNREGULATED (Continued)							
58	1,1-Dichloroethane	ND	ug/L	0.5	0.5			
59	2,2-Dichloropropane	ND	ug/L	0.5	0.5			
62	1,1-Dichloropropene	ND	ug/L	0.5	0.5			
64	Dibromomethane	ND	ug/L	0.5	0.5			
70	1,3-Dichloropropane	ND	ug/L	0.5	0.5			
72	1,1,1,2-Tetrachloroethane	ND	ug/L	0.5	0.5			
78	Bromobenzene	ND	ug/L	0.5	0.5			
79	1,2,3-Trichloropropane	ND	ug/L	0.5	0.5			
80	1,1,2,2-Tetrachloroethane	ND	ug/L	0.5	0.5			
81	o-Chlorotoluene	ND	ug/L	0.5	0.5			
82	p-Chlorotoluene	ND	ug/L	0.5	0.5			
83	m-Dichlorobenzene	ND	ug/L	0.5	0.5			
154	1,3-Dichloropropene	ND	ug/L	0.5	0.5			
	STATE UNREGULATED							
65	cis-1,3-Dichloropropene	ND	ug/L	0.5	0.5			
69	trans-1,3-Dichloropropene	ND	ug/L	0.5	0.5			
85	Fluorotrichloromethane	ND	ug/L	0.5	0.5			
86	Bromochloromethane	ND	ug/L	0.5	0.5			
87	Isopropylbenzene	ND	ug/L	0.5	0.5			
88	n-Propylbenzene	ND	ug/L	0.5	0.5			
89	1,3,5-Trimethylbenzene	ND	ug/L	0.5	0.5			
90	tert-Butylbenzene	ND	ug/L	0.5	0.5			
91	1,2,4-Trimethylbenzene	ND	ug/L	0.5	0.5			
92	sec-Butylbenzene	ND	ug/L	0.5	0.5			
93	p-Isopropyltoluene	ND	ug/L	0.5	0.5			
94	n-Butylbenzene	ND	ug/L	0.5	0.5			
96	Naphthalene	ND	ug/L	0.5	0.5			
97	Hexachlorobutadiene	ND	ug/L	0.5	0.5			
98	1,2,3-Trichlorobenzene	ND	ug/L	0.5	0.5			
102	EDB (Scan Confirm by 504.1	ND	ug/L	0.5	0.5			
103	DBCP (Scan Confirm By 504.1	ND	ug/L	0.5	0.5			
162	Dichlorodifluoromethane	ND	ug/L	0.5	0.5			

NOTES:

SRL (State Reporting Level): indicates the minimum reporting level required by the Washington Department of Health (DOH).

Trigger Level: DOH Drinking Water response level. Systems with compounds detected at concentrations in excess of this level are required to take additional samples. Contact your regional DOH office.

NA (Not Analyzed): in the results column indicates this compound was not included in the current analyis.

ND (Not Detected): in the results column indicates this compound was analyzed and not detected at a level greater than or equal to the SRL.

<(0.001): indicates the compound was not detected in the sample at or above the concentration indicated.

Comments:

This report is submitted for the exclusive use of the person, partnership, or corporation to whom it is addressed. Subsequent use of the name of this company or any member of its staff in connection with the advertising or sale of any product or process will be granted only on contract. This company accepts no responsibility except for the due performance of inspection and/or analysis in good faith and according to the rules of the trade and of science.

Laucks Since 1908
Testing Laboratories, Inc.
940 South Harney St., Seattle, WA 98108 (206) 767-5060 FAX (206) 767-5063
Chemistry, Microbiology, and Technical Services

REPORT ON SAMPLE: 0209284-03A
Client Sample ID: WIPPCO WELL

Date Received : 09/16/02 Collection Date : 09/12/02
Test Code : TIC_V Test Method : 524.2

TENTATIVELY IDENTIFIED VOLATILE COMPOUNDS

Number of TICs found: 0 Conc Units: ug/L

CAS Number	Compound Name	RT	Est. Conc

Form LTL-TIC-V

This report is submitted for the exclusive use of the person, partnership, or corporation to whom it is addressed. Subsequent use of the name of this company or any member of its staff in connection with the advertising or sale of any product or process will be granted only on contract. This company accepts no responsibility except for the due performance of inspection and/or analysis in good faith and according to the rules of the trade and of science.

Laucks Since 1908
Testing Laboratories, Inc.
940 South Harney St., Seattle, WA 98108 (206) 767-5060 FAX (206) 767-5063
Chemistry, Microbiology, and Technical Services

VOLATILE ORGANIC CHEMICALS (VOCs) ANALYSIS REPORT
EPA TEST METHOD - 524.2
For Sample 0106344-01

System ID No.: 99800W System name: City of Zillah
Lab/Sample No.: 08176817 Date Collected: 06/14/01 DOH Source No.: S03
Multiple Source Nos.: _____ Sample Type: B Sample Purpose: C
Date Received: 06/14/01 Date Reported: 07/02/01 Supervisor: MC
Date Analyzed: 06/20/01 Analyst: DP
County: YAKIMA Group: A
Sample Location: S03 3rd Ave Well
Send Report To: City of Zillah Bill To: City of Zillah

DOH#	ANALYTES	RESULTS	UNITS	SRL	TRIGGER	MCL	EXCEEDS Trigger?	EXCEEDS MCL?
	EPA REGULATED							
45	Vinyl Chloride	ND	ug/L	0.5	0.5	2.0		
46	1,1-Dichloroethylene	ND	ug/L	0.5	0.5	7.0		
47	1,1,1-Trichloroethane	ND	ug/L	0.5	0.5	200		
48	Carbon Tetrachloride	ND	ug/L	0.5	0.5	5.0		
49	Benzene	ND	ug/L	0.5	0.5	5.0		
50	1,2-Dichloroethane	ND	ug/L	0.5	0.5	5.0		
51	Trichloroethylene	ND	ug/L	0.5	0.5	5.0		
52	1,4-Dichlorobenzene	ND	ug/L	0.5	0.5	75		
56	Dichloromethane	ND	ug/L	0.5	0.5	5.0		
57	trans-1,2-Dichloroethylene	ND	ug/L	0.5	0.5	100		
60	cis-1,2-Dichloroethylene	ND	ug/L	0.5	0.5	70		
63	1,2-Dichloropropane	ND	ug/L	0.5	0.5	5.0		
66	Toluene	ND	ug/L	0.5	0.5	1000		
67	1,1,2-Trichloroethane	ND	ug/L	0.5	0.5	5.0		
68	Tetrachloroethylene	ND	ug/L	0.5	0.5	5.0		
71	Chlorobenzene	ND	ug/L	0.5	0.5	100		
73	Ethylbenzene	ND	ug/L	0.5	0.5	700		
76	Styrene	ND	ug/L	0.5	0.5	100		
84	1,2-Dichlorobenzene	ND	ug/L	0.5	0.5	600		
95	1,2,4-Trichlorobenzene	ND	ug/L	0.5	0.5	70		
160	Total Xylenes	ND	ug/L	0.5	0.5	10000		
74	m/p-Xylenes (MCL For Total)	ND	ug/L	0.5	0.5			
75	o-Xylene (MCL For Total)	ND	ug/L	0.5	0.5			
	EPA UNREGULATED							
27	Chloroform	ND	ug/L	0.5	0.5			
28	Bromodichloromethane	ND	ug/L	0.5	0.5			
29	Chlorodibromomethane	ND	ug/L	0.5	0.5			
30	Bromoform	ND	ug/L	0.5	0.5			
53	Chloromethane	ND	ug/L	0.5	0.5			
54	Bromomethane	ND	ug/L	0.5	0.5			
55	Chloroethane	ND	ug/L	0.5	0.5			

This report is submitted for the exclusive use of the person, partnership, or corporation to whom it is addressed. Subsequent use of the name of this company or any member of its staff in connection with the advertising or sale of any product or process will be granted only on contract. This company accepts no responsibility except for the due performance of inspection and/or analysis in good faith and according to the rules of the trade and of science.

Laucks Since 1908
Testing Laboratories, Inc.
940 South Harney St., Seattle, WA 98108 (206) 767-5060 FAX (206) 767-5063
Chemistry, Microbiology, and Technical Services

Sample: 0106344-01

DOH#	ANALYTES	RESULTS	UNITS	SRL	TRIGGER	MCL	EXCEEDS Trigger?	EXCEEDS MCL?
	EPA UNREGULATED (Continued)							
58	1,1-Dichloroethane	ND	ug/L	0.5	0.5			
59	2,2-Dichloropropane	ND	ug/L	0.5	0.5			
62	1,1-Dichloropropene	ND	ug/L	0.5	0.5			
64	Dibromomethane	ND	ug/L	0.5	0.5			
70	1,3-Dichloropropane	ND	ug/L	0.5	0.5			
72	1,1,1,2-Tetrachloroethane	ND	ug/L	0.5	0.5			
78	Bromobenzene	ND	ug/L	0.5	0.5			
79	1,2,3-Trichloropropane	ND	ug/L	0.5	0.5			
80	1,1,2,2-Tetrachloroethane	ND	ug/L	0.5	0.5			
81	o-Chlorotoluene	ND	ug/L	0.5	0.5			
82	p-Chlorotoluene	ND	ug/L	0.5	0.5			
83	m-Dichlorobenzene	ND	ug/L	0.5	0.5			
154	1,3-Dichloropropene	ND	ug/L	0.5	0.5			
	STATE UNREGULATED							
65	cis-1,3-Dichloropropene	ND	ug/L	0.5	0.5			
69	trans-1,3-Dichloropropene	ND	ug/L	0.5	0.5			
85	Fluorotrichloromethane	ND	ug/L	0.5	0.5			
86	Bromochloromethane	ND	ug/L	0.5	0.5			
87	Isopropylbenzene	ND	ug/L	0.5	0.5			
88	n-Propylbenzene	ND	ug/L	0.5	0.5			
89	1,3,5-Trimethylbenzene	ND	ug/L	0.5	0.5			
90	tert-Butylbenzene	ND	ug/L	0.5	0.5			
91	1,2,4-Trimethylbenzene	ND	ug/L	0.5	0.5			
92	sec-Butylbenzene	ND	ug/L	0.5	0.5			
93	p-Isopropyltoluene	ND	ug/L	0.5	0.5			
94	n-Butylbenzene	ND	ug/L	0.5	0.5			
96	Naphthalene	ND	ug/L	0.5	0.5			
97	Hexachlorobutadiene	ND	ug/L	0.5	0.5			
98	1,2,3-Trichlorobenzene	ND	ug/L	0.5	0.5			
102	EDB (Scan Confirm by 504.1	ND	ug/L	0.5	0.5			
103	DBCP (Scan Confirm By 504.1	ND	ug/L	0.5	0.5			
162	Dichlorodifluoromethane	ND	ug/L	0.5	0.5			

NOTES:

SRL (State Reporting Level): indicates the minimum reporting level required by the Washington Department of Health (DOH).

Trigger Level: DOH Drinking Water response level. Systems with compounds detected at concentrations in excess of this level are required to take additional samples. Contact your regional DOH office.

NA (Not Analyzed): in the results column indicates this compound was not included in the current analyis.

ND (Not Detected): in the results column indicates this compound was analyzed and not detected at a level greater than or equal to the SRL.

<(0.001): indicates the compound was not detected in the sample at or above the concentration indicated.

Comments:

This report is submitted for the exclusive use of the person, partnership, or corporation to whom it is addressed. Subsequent use of the name of this company or any member of its staff in connection with the advertising or sale of any product or process will be granted only on contract. This company accepts no responsibility except for the due performance of inspection and/or analysis in good faith and according to the rules of the trade and of science.

Laucks Since 1908
Testing Laboratories, Inc.
940 South Harney St., Seattle, WA 98108 (206) 767-5060 FAX (206) 767-5063
Chemistry, Microbiology, and Technical Services

REPORT ON SAMPLE: 0106344-01A
Client Sample ID: S03 3rd Ave Well

Date Received : 06/14/01 Collection Date : 06/14/01
Test Code : TIC_V Test Method : 524.2

TENTATIVELY IDENTIFIED VOLATILE COMPOUNDS

Number of TICs found: 0 Conc Units: ug/L

CAS Number	Compound Name	RT	Est. Conc

Form LTL-TIC-V

This report is submitted for the exclusive use of the person, partnership, or corporation to whom it is addressed. Subsequent use of the name of this company or any member of its staff in connection with the advertising or sale of any product or process will be granted only on contract. This company accepts no responsibility except for the due performance of inspection and/or analysis in good faith and according to the rules of the trade and of science.

Laucks Since 1908
Testing Laboratories, Inc.
940 South Harney St., Seattle, WA 98108 (206) 767-5060 FAX (206) 767-5063
Chemistry, Microbiology, and Technical Services

VOLATILE ORGANIC CHEMICALS (VOCs) ANALYSIS REPORT
EPA TEST METHOD - 524.2
For Sample 0002189-03

System ID No.: 99800W System name: City of Zillah
Lab/Sample No.: 08167861 Date Collected: 02/03/00 DOH Source No.: S03
Multiple Source Nos.: _____ Sample Type: C Sample Purpose: C
Date Received: 02/03/00 Date Reported: 02/28/00 Supervisor: MC
Date Analyzed: 02/15/00 Analyst: JM
County: YAKIMA Group: U
Sample Location: Wippco Well
Send Report To: City of Zillah Bill To: City of Zillah

DOH#	ANALYTES	RESULTS	UNITS	SRL	TRIGGER	MCL	EXCEEDS Trigger?	EXCEEDS MCL?
	EPA REGULATED							
45	Vinyl Chloride	ND	ug/L	0.5	0.5	2.0		
46	1,1-Dichloroethylene	ND	ug/L	0.5	0.5	7.0		
47	1,1,1-Trichloroethane	ND	ug/L	0.5	0.5	200		
48	Carbon Tetrachloride	ND	ug/L	0.5	0.5	5.0		
49	Benzene	ND	ug/L	0.5	0.5	5.0		
50	1,2-Dichloroethane	ND	ug/L	0.5	0.5	5.0		
51	Trichloroethylene	ND	ug/L	0.5	0.5	5.0		
52	1,4-Dichlorobenzene	ND	ug/L	0.5	0.5	75		
56	Dichloromethane	ND	ug/L	0.5	0.5	5.0		
57	trans-1,2-Dichloroethylene	ND	ug/L	0.5	0.5	100		
60	cis-1,2-Dichloroethylene	ND	ug/L	0.5	0.5	70		
63	1,2-Dichloropropane	ND	ug/L	0.5	0.5	5.0		
66	Toluene	ND	ug/L	0.5	0.5	1000		
67	1,1,2-Trichloroethane	ND	ug/L	0.5	0.5	5.0		
68	Tetrachloroethylene	ND	ug/L	0.5	0.5	5.0		
71	Chlorobenzene	ND	ug/L	0.5	0.5	100		
73	Ethylbenzene	ND	ug/L	0.5	0.5	700		
76	Styrene	ND	ug/L	0.5	0.5	100		
84	1,2-Dichlorobenzene	ND	ug/L	0.5	0.5	600		
95	1,2,4-Trichlorobenzene	ND	ug/L	0.5	0.5	70		
160	Total Xylenes	ND	ug/L	0.5	0.5	10000		
74	m/p-Xylenes (MCL For Total)	ND	ug/L	0.5	0.5			
75	o-Xylene (MCL For Total)	ND	ug/L	0.5	0.5			
	EPA UNREGULATED							
27	Chloroform	ND	ug/L	0.5	0.5			
28	Bromodichloromethane	ND	ug/L	0.5	0.5			
29	Chlorodibromomethane	ND	ug/L	0.5	0.5			
30	Bromoform	ND	ug/L	0.5	0.5			
53	Chloromethane	ND	ug/L	0.5	0.5			
54	Bromomethane	ND	ug/L	0.5	0.5			
55	Chloroethane	ND	ug/L	0.5	0.5			

This report is submitted for the exclusive use of the person, partnership, or corporation to whom it is addressed. Subsequent use of the name of this company or any member of its staff in connection with the advertising or sale of any product or process will be granted only on contract. This company accepts no responsibility except for the due performance of inspection and/or analysis in good faith and according to the rules of the trade and of science.

Laucks Since 1908
Testing Laboratories, Inc.
940 South Harney St., Seattle, WA 98108 (206) 767-5060 FAX (206) 767-5063

Chemistry, Microbiology, and Technical Services

Sample: 0002189-03

DOH#	ANALYTES	RESULTS	UNITS	SRL	TRIGGER	MCL	EXCEEDS Trigger?	EXCEEDS MCL?
	EPA UNREGULATED (Continued)							
58	1,1-Dichloroethane	ND	ug/L	0.5	0.5			
59	2,2-Dichloropropane	ND	ug/L	0.5	0.5			
62	1,1-Dichloropropene	ND	ug/L	0.5	0.5			
64	Dibromomethane	ND	ug/L	0.5	0.5			
70	1,3-Dichloropropane	ND	ug/L	0.5	0.5			
72	1,1,1,2-Tetrachloroethane	ND	ug/L	0.5	0.5			
78	Bromobenzene	ND	ug/L	0.5	0.5			
79	1,2,3-Trichloropropane	ND	ug/L	0.5	0.5			
80	1,1,2,2-Tetrachloroethane	ND	ug/L	0.5	0.5			
81	o-Chlorotoluene	ND	ug/L	0.5	0.5			
82	p-Chlorotoluene	ND	ug/L	0.5	0.5			
83	m-Dichlorobenzene	ND	ug/L	0.5	0.5			
154	1,3-Dichloropropene	ND	ug/L	0.5	0.5			
	STATE UNREGULATED							
65	cis-1,3-Dichloropropene	ND	ug/L	0.5	0.5			
69	trans-1,3-Dichloropropene	ND	ug/L	0.5	0.5			
85	Fluorotrichloromethane	ND	ug/L	0.5	0.5			
86	Bromochloromethane	ND	ug/L	0.5	0.5			
87	Isopropylbenzene	ND	ug/L	0.5	0.5			
88	n-Propylbenzene	ND	ug/L	0.5	0.5			
89	1,3,5-Trimethylbenzene	ND	ug/L	0.5	0.5			
90	tert-Butylbenzene	ND	ug/L	0.5	0.5			
91	1,2,4-Trimethylbenzene	ND	ug/L	0.5	0.5			
92	sec-Butylbenzene	ND	ug/L	0.5	0.5			
93	p-Isopropyltoluene	ND	ug/L	0.5	0.5			
94	n-Butylbenzene	ND	ug/L	0.5	0.5			
96	Naphthalene	ND	ug/L	0.5	0.5			
97	Hexachlorobutadiene	ND	ug/L	0.5	0.5			
98	1,2,3-Trichlorobenzene	ND	ug/L	0.5	0.5			
102	EDB (Scan Confirm by 504.1	ND	ug/L	0.5	0.5			
103	DBCP (Scan Confirm By 504.1	ND	ug/L	0.5	0.5			
162	Dichlorodifluoromethane	ND	ug/L	0.5	0.5			

NOTES:

SRL (State Reporting Level): indicates the minimum reporting level required by the Washington Department of Health (DOH).

Trigger Level: DOH Drinking Water response level. Systems with compounds detected at concentrations in excess of this level are required to take additional samples. Contact your regional DOH office.

NA (Not Analyzed): in the results column indicates this compound was not included in the current analyis.

ND (Not Detected): in the results column indicates this compound was analyzed and not detected at a level greater than or equal to the SRL.

<(0.001): indicates the compound was not detected in the sample at or above the concentration indicated.

Comments:

This report is submitted for the exclusive use of the person, partnership, or corporation to whom it is addressed. Subsequent use of the name of this company or any member of its staff in connection with the advertising or sale of any product or process will be granted only on contract. This company accepts no responsibility except for the due performance of inspection and/or analysis in good faith and according to the rules of the trade and of science.

Laucks Since 1908
Testing Laboratories, Inc.
940 South Harney St., Seattle, WA 98108 (206) 767-5060 FAX (206) 767-5063
Chemistry, Microbiology, and Technical Services

REPORT ON SAMPLE: 0002189-03C
Client Sample ID: Wippco Well

Date Received : 02/03/00 Collection Date : 02/03/00
Test Code : TIC_V Test Method : 524.2

TENTATIVELY IDENTIFIED VOLATILE COMPOUNDS

Number of TICs found: 0 Conc Units: ug/L

CAS Number	Compound Name	RT	Est. Conc

Form LTL-TIC-V

This report is submitted for the exclusive use of the person, partnership, or corporation to whom it is addressed. Subsequent use of the name of this company or any member of its staff in connection with the advertising or sale of any product or process will be granted only on contract. This company accepts no responsibility except for the due performance of inspection and/or analysis in good faith and according to the rules of the trade and of science.

Printed on Recycled Paper

SYNTHETIC ORGANIC CHEMICAL ANALYSIS - RAINIER WELL

Washington State Department of Health

Division of Environmental Health
Office of Drinking Water

Help

View Sample Detail - WSID 99800W - ZILLAH, CITY OF

Collect Date	6/22/2009
Lab Number	089
Lab Name	Water Management Laboratory Inc
Sample Number	88211
Source	01
Analyte Group	SOC-SYNTHETIC ORGANIC CONTAMINANTS
Test Panel	HERB1-CHLOROPHENOXY HERBICIDES
Sample Location	rainier well
Sample Type	Pre-Treatment / Raw

Analyte DOH Num	Analyte Name	Result Range	Result Quantity	Maximum Contaminant Level	Units	State Reporting Limit
0037	2,4 - D	LT	0.5000	70.0000	ug/L	0.5000
0038	2,4,5 TP (SILVEX)	LT	1.0000	50.0000	ug/L	1.0000
0134	PENTACHLOROPHENOL	LT	0.2000	1.0000	ug/L	0.2000
0135	2,4 DB	LT	1.0000		ug/L	1.0000
0137	DALAPON	LT	5.0000	200.0000	ug/L	5.0000
0138	DICAMBA	LT	0.2000		ug/L	0.2000
0139	DINOSEB	LT	1.0000	7.0000	ug/L	1.0000
0140	PICLORAM	LT	0.5000	500.0000	ug/L	0.5000
0222	TOTAL DCPA	LT	1.0000		ug/L	1.0000
0223	ACIFLUORFEN	LT	2.0000		ug/L	2.0000
0224	CHLORAMBEN	LT	0.2000		ug/L	0.2000
0225	DCPA ACID METABOLITES	LT	0.1000		ug/L	0.1000
0226	3,5 DICHLORBENZOIC ACID	LT	0.5000		ug/L	0.5000
0228	4- NITROPHENOL	LT	0.5000		ug/L	0.5000

Records 1 - 14 of 14

Links to external resources are provided as a public service and do not imply endorsement by the Washington State Department of Health

Department of Health, Office of Drinking Water

Street Address:
243 Israel Road S.E. 2nd floor
Tumwater, WA 98501

Mail:
PO BOX 47822
Olympia, WA 98504-7822

Phone: (360) 236-3100

Send inquiries about DOH and its programs to the Health Consumer Assistance Office
Comments or questions regarding this Web site? Send email to Environmental Health Application Testing and Support or call 360-236-3113.

Washington State Department of Health

Division of Environmental Health
Office of Drinking Water

Help

View Sample Detail - WSID 99800W - ZILLAH, CITY OF

Collect Date	6/22/2009
Lab Number	089
Lab Name	Water Management Laboratory Inc
Sample Number	88211
Source	01
Analyte Group	SOC-SYNTHETIC ORGANIC CONTAMINANTS
Test Panel	PEST1-GENERAL PESTICIDE SUITE
Sample Location	rainier well
Sample Type	Pre-Treatment / Raw

Analyte DOH Num	Analyte Name	Result Range	Result Quantity	Maximum Contaminant Level	Units	State Reporting Limit
0033	ENDRIN	LT	0.0500	2.0000	ug/L	0.0500
0034	LINDANE (BHC - GAMMA)	LT	0.0400	0.2000	ug/L	0.0400
0035	METHOXYCHLOR	LT	10.0000	40.0000	ug/L	10.0000
0036	TOXAPHENE	LT	2.0000	3.0000	ug/L	2.0000
0117	Alachlor	LT	0.4000	2.0000	ug/L	0.4000
0119	ATRAZINE	LT	0.5000	3.0000	ug/L	0.5000
0120	BENZO (A) PYRENE	LT	0.0400	0.2000	ug/L	0.0400
0121	BUTACHLOR	LT	0.4000		ug/L	0.4000
0122	CHLORDANE (TOTAL)	LT	0.4000	2.0000	ug/L	0.4000
0123	DIELDRIN	LT	0.1000		ug/L	0.1000
0124	DI (ETHYLHEXYL) ADIPATE	LT	1.3000	400.0000	ug/L	1.3000
0125	DI (ETHYLHEXYL) PHTHALATE	LT	1.3000	6.0000	ug/L	1.3000
0126	HEPTACHLOR	LT	0.0900	0.4000	ug/L	0.0900
0127	HEPTACHLOR EPOXIDE	LT	0.1000	0.2000	ug/L	0.1000
0128	HEXACHLOROBENZENE	LT	0.5000	1.0000	ug/L	0.5000
0129	HEXACHLOROCYCLO PENTADIENE	LT	0.5000	50.0000	ug/L	0.5000
0130	METOLACHLOR	LT	1.0000		ug/L	1.0000
0131	METRIBUZIN	LT	0.2000		ug/L	0.2000
0132	PROPACHLOR	LT	0.1000		ug/L	0.1000
0133	SIMAZINE	LT	0.1500	4.0000	ug/L	0.1500
0134	PENTACHLOROPHENOL	LT	0.2000	1.0000	ug/L	0.2000
0153	PCB (AS TOTAL AROCHLORS)	LT	0.5000	0.5000	ug/L	0.5000
0173	AROCHLOR 1221	LT	100.0000		ug/L	100.0000
0174	AROCHLOR 1232	LT	2.5000		ug/L	2.5000
0175	AROCHLOR 1242	LT	1.5000		ug/L	1.5000

Records 1 - 25 of 31

Links to external resources are provided as a public service and do not imply endorsement by the Washington State Department of Health

Washington State Department of Health

Division of Environmental Health
Office of Drinking Water

Help

View Sample Detail - WSID 99800W - ZILLAH, CITY OF

Collect Date	6/22/2009
Lab Number	089
Lab Name	Water Management Laboratory Inc
Sample Number	88211
Source	01
Analyte Group	SOC-SYNTHETIC ORGANIC CONTAMINANTS
Test Panel	PEST1-GENERAL PESTICIDE SUITE
Sample Location	rainier well
Sample Type	Pre-Treatment / Raw

Analyte DOH Num	Analyte Name	Result Range	Result Quantity	Maximum Contaminant Level	Units	State Reporting Limit
0176	AROCHLOR 1248	LT	0.5000		ug/L	0.5000
0177	AROCHLOR 1254	LT	0.5000		ug/L	0.5000
0178	AROCHLOR 1260	LT	1.0000		ug/L	1.0000
0179	BROMACIL	LT	0.2000		ug/L	0.2000
0180	AROCHLOR 1016	LT	0.4000		ug/L	0.4000
0254	FLUORENE	LT	0.2000		ug/L	0.2000

Records 26 - 31 of 31

Links to external resources are provided as a public service and do not imply endorsement by the Washington State Department of Health

Department of Health, Office of Drinking Water

Street Address:
243 Israel Road S.E. 2nd floor
Tumwater, WA 98501

Mail:
PO BOX 47822
Olympia, WA 98504-7822

Phone: (360) 236-3100

Send inquiries about DOH and its programs to the Health Consumer Assistance Office
Comments or questions regarding this Web site? Send email to Environmental Health Application Testing and Support or call 360-236-3113.

Washington State Department of Health

Division of Environmental Health
Office of Drinking Water

View Sample Detail - WSID 99800W - ZILLAH, CITY OF

Collect Date	6/14/2001
Lab Number	081
Lab Name	Laucks Testing Lab, Inc - Seattle
Sample Number	76820
Source	01
Analyte Group	SOC-SYNTHETIC ORGANIC CONTAMINANTS
Test Panel	FUMIGANT-SOIL FUMIGANTS
Sample Location	RAINIER WELL

Analyte DOH Num	Analyte Name	Result Range	Result Quantity	Maximum Contaminant Level	Units	State Reporting Limit
0102	EDB (ETHYLENE DIBROMIDE)	LT	0.0200	0.0500	ug/L	0.0200
0103	DBCP	LT	0.0400	0.2000	ug/L	0.0400

Records 1 - 2 of 2

Home Page | Find Water Systems | Find Water Quality | Downloads/Reports

DOH Home | Division of Environmental Health | Drinking Water Home | Drinking Water Contacts
Access Local Health | Privacy Notice | Disclaimer/Copyright Information

Links to external resources are provided as a public service and do not imply endorsement by the Washington State Department of Health

Office of Drinking Water
243 Israel Road SE
P.O. Box 47849
Tumwater, WA 98501
(360) 236-3113

Send inquiries about DOH and its programs to the Health Consumer Assistance Office
Comments or questions regarding this Web site? Send mail to ODW Help Desk.

Last Update : 07/21/2006

Washington State Department of Health

Division of Environmental Health
Office of Drinking Water

View Sample Detail - WSID 99800W - ZILLAH, CITY OF

Collect Date	8/24/1998
Lab Number	081
Lab Name	Laucks Testing Lab, Inc - Seattle
Sample Number	56531
Source	01
Analyte Group	SOC-SYNTHETIC ORGANIC CONTAMINANTS
Test Panel	FUMIGANT-SOIL FUMIGANTS
Sample Location	RAINIER WELL

Analyte DOH Num	Analyte Name	Result Range	Result Quantity	Maximum Contaminant Level	Units	State Reporting Limit
0102	EDB (ETHYLENE DIBROMIDE)	LT	0.0200	0.0500	ug/L	0.0200
0103	DBCP	LT	0.0400	0.2000	ug/L	0.0400

Records 1 - 2 of 2

Home Page | Find Water Systems | Find Water Quality | Downloads/Reports

DOH Home | Division of Environmental Health | Drinking Water Home | Drinking Water Contacts
Access Local Health | Privacy Notice | Disclaimer/Copyright Information

Links to external resources are provided as a public service and do not imply endorsement by the Washington State Department of Health

Office of Drinking Water
243 Israel Road SE
P.O. Box 47849
Tumwater, WA 98501
(360) 236-3113

Send inquiries about DOH and its programs to the Health Consumer Assistance Office
Comments or questions regarding this Web site? Send mail to ODW Help Desk.

Last Update : 07/21/2006

SYNTHETIC ORGANIC CHEMICAL ANALYSIS - 3RD AVENUE WELL

Washington State Department of Health

Division of Environmental Health
Office of Drinking Water

Help

View Sample Detail - WSID 99800W - ZILLAH, CITY OF

Collect Date	6/22/2009
Lab Number	089
Lab Name	Water Management Laboratory Inc
Sample Number	88209
Source	02
Analyte Group	SOC-SYNTHETIC ORGANIC CONTAMINANTS
Test Panel	HERB1-CHLOROPHENOXY HERBICIDES
Sample Location	whd
Sample Type	Pre-Treatment / Raw

Analyte DOH Num	Analyte Name	Result Range	Result Quantity	Maximum Contaminant Level	Units	State Reporting Limit
0037	2,4 - D	LT	0.5000	70.0000	ug/L	0.5000
0038	2,4,5 TP (SILVEX)	LT	1.0000	50.0000	ug/L	1.0000
0134	PENTACHLOROPHENOL	LT	0.2000	1.0000	ug/L	0.2000
0135	2,4 DB	LT	1.0000		ug/L	1.0000
0137	DALAPON	LT	5.0000	200.0000	ug/L	5.0000
0138	DICAMBA	LT	0.2000		ug/L	0.2000
0139	DINOSEB	LT	1.0000	7.0000	ug/L	1.0000
0140	PICLORAM	LT	0.5000	500.0000	ug/L	0.5000
0222	TOTAL DCPA	LT	1.0000		ug/L	1.0000
0223	ACIFLUORFEN	LT	2.0000		ug/L	2.0000
0224	CHLORAMBEN	LT	0.2000		ug/L	0.2000
0225	DCPA ACID METABOLITES	LT	0.1000		ug/L	0.1000
0226	3,5 DICHLORBENZOIC ACID	LT	0.5000		ug/L	0.5000
0228	4- NITROPHENOL	LT	0.5000		ug/L	0.5000

Records 1 - 14 of 14

Links to external resources are provided as a public service and do not imply endorsement by the Washington State Department of Health

Department of Health, Office of Drinking Water

Street Address:
243 Israel Road S.E. 2nd floor
Tumwater, WA 98501

Mail:
PO BOX 47822
Olympia, WA 98504-7822

Phone: (360) 236-3100

Send inquiries about DOH and its programs to the Health Consumer Assistance Office
Comments or questions regarding this Web site? Send email to Environmental Health Application Testing and Support or call 360-236-3113.

Washington State Department of Health

Division of Environmental Health
Office of Drinking Water

Help

View Sample Detail - WSID 99800W - ZILLAH, CITY OF

Collect Date	6/22/2009
Lab Number	089
Lab Name	Water Management Laboratory Inc
Sample Number	88209
Source	02
Analyte Group	SOC-SYNTHETIC ORGANIC CONTAMINANTS
Test Panel	PEST1-GENERAL PESTICIDE SUITE
Sample Location	whd
Sample Type	Pre-Treatment / Raw

Analyte DOH Num	Analyte Name	Result Range	Result Quantity	Maximum Contaminant Level	Units	State Reporting Limit
0033	ENDRIN	LT	0.0500	2.0000	ug/L	0.0500
0034	LINDANE (BHC - GAMMA)	LT	0.0400	0.2000	ug/L	0.0400
0035	METHOXYCHLOR	LT	10.0000	40.0000	ug/L	10.0000
0036	TOXAPHENE	LT	2.0000	3.0000	ug/L	2.0000
0117	Alachlor	LT	0.4000	2.0000	ug/L	0.4000
0119	ATRAZINE	LT	0.5000	3.0000	ug/L	0.5000
0120	BENZO (A) PYRENE	LT	0.0400	0.2000	ug/L	0.0400
0121	BUTACHLOR	LT	0.4000		ug/L	0.4000
0122	CHLORDANE (TOTAL)	LT	0.4000	2.0000	ug/L	0.4000
0123	DIELDRIN	LT	0.1000		ug/L	0.1000
0124	DI (ETHYLHEXYL) ADIPATE	LT	1.3000	400.0000	ug/L	1.3000
0125	DI (ETHYLHEXYL) PHTHALATE	LT	1.3000	6.0000	ug/L	1.3000
0126	HEPTACHLOR	LT	0.0900	0.4000	ug/L	0.0900
0127	HEPTACHLOR EPOXIDE	LT	0.1000	0.2000	ug/L	0.1000
0128	HEXACHLOROBENZENE	LT	0.5000	1.0000	ug/L	0.5000
0129	HEXACHLOROCYCLO PENTADIENE	LT	0.5000	50.0000	ug/L	0.5000
0130	METOLACHLOR	LT	1.0000		ug/L	1.0000
0131	METRIBUZIN	LT	0.2000		ug/L	0.2000
0132	PROPACHLOR	LT	0.1000		ug/L	0.1000
0133	SIMAZINE	LT	0.1500	4.0000	ug/L	0.1500
0134	PENTACHLOROPHENOL	LT	0.2000	1.0000	ug/L	0.2000
0153	PCB (AS TOTAL AROCHLORS)	LT	0.5000	0.5000	ug/L	0.5000
0173	AROCHLOR 1221	LT	100.0000		ug/L	100.0000
0174	AROCHLOR 1232	LT	2.5000		ug/L	2.5000
0175	AROCHLOR 1242	LT	1.5000		ug/L	1.5000

Records 1 - 25 of 31

Links to external resources are provided as a public service and do not imply endorsement by the Washington State Department of Health

Washington State Department of Health

Division of Environmental Health
Office of Drinking Water

Help

View Sample Detail - WSID 99800W - ZILLAH, CITY OF

Collect Date	6/22/2009
Lab Number	089
Lab Name	Water Management Laboratory Inc
Sample Number	88209
Source	02
Analyte Group	SOC-SYNTHETIC ORGANIC CONTAMINANTS
Test Panel	PEST1-GENERAL PESTICIDE SUITE
Sample Location	whd
Sample Type	Pre-Treatment / Raw

Analyte DOH Num	Analyte Name	Result Range	Result Quantity	Maximum Contaminant Level	Units	State Reporting Limit
0176	AROCHLOR 1248	LT	0.5000		ug/L	0.5000
0177	AROCHLOR 1254	LT	0.5000		ug/L	0.5000
0178	AROCHLOR 1260	LT	1.0000		ug/L	1.0000
0179	BROMACIL	LT	0.2000		ug/L	0.2000
0180	AROCHLOR 1016	LT	0.4000		ug/L	0.4000
0254	FLUORENE	LT	0.2000		ug/L	0.2000

Records 26 - 31 of 31

Links to external resources are provided as a public service and do not imply endorsement by the Washington State Department of Health

Department of Health, Office of Drinking Water

Street Address:
243 Israel Road S.E. 2nd floor
Tumwater, WA 98501

Mail:
PO BOX 47822
Olympia, WA 98504-7822

Phone: (360) 236-3100

Send inquiries about DOH and its programs to the Health Consumer Assistance Office
Comments or questions regarding this Web site? Send email to Environmental Health Application Testing and Support or call 360-236-3113.

Washington State Department of Health

Division of Environmental Health
Office of Drinking Water

View Sample Detail - WSID 99800W - ZILLAH, CITY OF

Collect Date	6/12/2001
Lab Number	081
Lab Name	Laucks Testing Lab, Inc - Seattle
Sample Number	76815
Source	02
Analyte Group	SOC-SYNTHETIC ORGANIC CONTAMINANTS
Test Panel	FUMIGANT-SOIL FUMIGANTS
Sample Location	~~WIPPCO~~ WELL

Analyte DOH Num	Analyte Name	Result Range	Result Quantity	Maximum Contaminant Level	Units	State Reporting Limit
0102	EDB (ETHYLENE DIBROMIDE)	LT	0.0200	0.0500	ug/L	0.0200
0103	DBCP	LT	0.0400	0.2000	ug/L	0.0400

Records 1 - 2 of 2

Home Page | Find Water Systems | Find Water Quality | Downloads/Reports

DOH Home | Division of Environmental Health | Drinking Water Home | Drinking Water Contacts
Access Local Health | Privacy Notice | Disclaimer/Copyright Information

Links to external resources are provided as a public service and do not imply endorsement by the Washington State Department of Health

Office of Drinking Water
243 Israel Road SE
P.O. Box 47849
Tumwater, WA 98501
(360) 236-3113

Send inquiries about DOH and its programs to the Health Consumer Assistance Office
Comments or questions regarding this Web site? Send mail to ODW Help Desk.

Last Update : 07/21/2006

Washington State Department of Health

Division of Environmental Health
Office of Drinking Water

View Sample Detail - WSID 99800W - ZILLAH, CITY OF

Collect Date	8/24/1998
Lab Number	081
Lab Name	Laucks Testing Lab, Inc - Seattle
Sample Number	56532
Source	02
Analyte Group	SOC-SYNTHETIC ORGANIC CONTAMINANTS
Test Panel	FUMIGANT-SOIL FUMIGANTS
Sample Location	3RD AVE AT WELL SITE

Analyte DOH Num	Analyte Name	Result Range	Result Quantity	Maximum Contaminant Level	Units	State Reporting Limit
0102	EDB (ETHYLENE DIBROMIDE)	LT	0.0200	0.0500	ug/L	0.0200
0103	DBCP	LT	0.0400	0.2000	ug/L	0.0400

Records 1 - 2 of 2

Home Page | Find Water Systems | Find Water Quality | Downloads/Reports

DOH Home | Division of Environmental Health | Drinking Water Home | Drinking Water Contacts
Access Local Health | Privacy Notice | Disclaimer/Copyright Information

Links to external resources are provided as a public service and do not imply endorsement by the Washington State Department of Health

Office of Drinking Water
243 Israel Road SE
P.O. Box 47849
Tumwater, WA 98501
(360) 236-3113

Send inquiries about DOH and its programs to the Health Consumer Assistance Office
Comments or questions regarding this Web site? Send mail to ODW Help Desk.

Last Update : 07/21/2006

SYNTHETIC ORGANIC CHEMICAL ANALYSIS - WIPPCO WELL

Washington State Department of Health

Division of Environmental Health
Office of Drinking Water

Help

View Sample Detail - WSID 99800W - ZILLAH, CITY OF

Collect Date	6/22/2009
Lab Number	089
Lab Name	Water Management Laboratory Inc
Sample Number	88210
Source	03
Analyte Group	SOC-SYNTHETIC ORGANIC CONTAMINANTS
Test Panel	HERB1-CHLOROPHENOXY HERBICIDES
Sample Location	whd
Sample Type	Pre-Treatment / Raw

Analyte DOH Num	Analyte Name	Result Range	Result Quantity	Maximum Contaminant Level	Units	State Reporting Limit
0037	2,4 - D	LT	0.5000	70.0000	ug/L	0.5000
0038	2,4,5 TP (SILVEX)	LT	1.0000	50.0000	ug/L	1.0000
0134	PENTACHLOROPHENOL	LT	0.2000	1.0000	ug/L	0.2000
0135	2,4 DB	LT	1.0000		ug/L	1.0000
0137	DALAPON	LT	5.0000	200.0000	ug/L	5.0000
0138	DICAMBA	LT	0.2000		ug/L	0.2000
0139	DINOSEB	LT	1.0000	7.0000	ug/L	1.0000
0140	PICLORAM	LT	0.5000	500.0000	ug/L	0.5000
0222	TOTAL DCPA	LT	1.0000		ug/L	1.0000
0223	ACIFLUORFEN	LT	2.0000		ug/L	2.0000
0224	CHLORAMBEN	LT	0.2000		ug/L	0.2000
0225	DCPA ACID METABOLITES	LT	0.1000		ug/L	0.1000
0226	3,5 DICHLORBENZOIC ACID	LT	0.5000		ug/L	0.5000
0228	4- NITROPHENOL	LT	0.5000		ug/L	0.5000

Records 1 - 14 of 14

Links to external resources are provided as a public service and do not imply endorsement by the Washington State Department of Health

Department of Health, Office of Drinking Water

Street Address:
243 Israel Road S.E. 2nd floor
Tumwater, WA 98501

Mail:
PO BOX 47822
Olympia, WA 98504-7822

Phone: (360) 236-3100

Send inquiries about DOH and its programs to the Health Consumer Assistance Office
Comments or questions regarding this Web site? Send email to Environmental Health Application Testing and Support or call 360-236-3113.

Washington State Department of Health

Division of Environmental Health
Office of Drinking Water

Help

View Sample Detail - WSID 99800W - ZILLAH, CITY OF

Collect Date	6/22/2009
Lab Number	089
Lab Name	Water Management Laboratory Inc
Sample Number	88210
Source	03
Analyte Group	SOC-SYNTHETIC ORGANIC CONTAMINANTS
Test Panel	PEST1-GENERAL PESTICIDE SUITE
Sample Location	whd
Sample Type	Pre-Treatment / Raw

Analyte DOH Num	Analyte Name	Result Range	Result Quantity	Maximum Contaminant Level	Units	State Reporting Limit
0033	ENDRIN	LT	0.0500	2.0000	ug/L	0.0500
0034	LINDANE (BHC - GAMMA)	LT	0.0400	0.2000	ug/L	0.0400
0035	METHOXYCHLOR	LT	10.0000	40.0000	ug/L	10.0000
0036	TOXAPHENE	LT	2.0000	3.0000	ug/L	2.0000
0117	Alachlor	LT	0.4000	2.0000	ug/L	0.4000
0119	ATRAZINE	LT	0.5000	3.0000	ug/L	0.5000
0120	BENZO (A) PYRENE	LT	0.0400	0.2000	ug/L	0.0400
0121	BUTACHLOR	LT	0.4000		ug/L	0.4000
0122	CHLORDANE (TOTAL)	LT	0.4000	2.0000	ug/L	0.4000
0123	DIELDRIN	LT	0.1000		ug/L	0.1000
0124	DI (ETHYLHEXYL) ADIPATE	LT	1.3000	400.0000	ug/L	1.3000
0125	DI (ETHYLHEXYL) PHTHALATE	LT	1.3000	6.0000	ug/L	1.3000
0126	HEPTACHLOR	LT	0.0900	0.4000	ug/L	0.0900
0127	HEPTACHLOR EPOXIDE	LT	0.1000	0.2000	ug/L	0.1000
0128	HEXACHLOROBENZENE	LT	0.5000	1.0000	ug/L	0.5000
0129	HEXACHLOROCYCLO PENTADIENE	LT	0.5000	50.0000	ug/L	0.5000
0130	METOLACHLOR	LT	1.0000		ug/L	1.0000
0131	METRIBUZIN	LT	0.2000		ug/L	0.2000
0132	PROPACHLOR	LT	0.1000		ug/L	0.1000
0133	SIMAZINE	LT	0.1500	4.0000	ug/L	0.1500
0134	PENTACHLOROPHENOL	LT	0.2000	1.0000	ug/L	0.2000
0153	PCB (AS TOTAL AROCHLORS)	LT	0.5000	0.5000	ug/L	0.5000
0173	AROCHLOR 1221	LT	100.0000		ug/L	100.0000
0174	AROCHLOR 1232	LT	2.5000		ug/L	2.5000
0175	AROCHLOR 1242	LT	1.5000		ug/L	1.5000

Records 1 - 25 of 31

Links to external resources are provided as a public service and do not imply endorsement by the Washington State Department of Health

Washington State Department of Health

Division of Environmental Health
Office of Drinking Water

Help

View Sample Detail - WSID 99800W - ZILLAH, CITY OF

Collect Date	6/22/2009
Lab Number	089
Lab Name	Water Management Laboratory Inc
Sample Number	88210
Source	03
Analyte Group	SOC-SYNTHETIC ORGANIC CONTAMINANTS
Test Panel	PEST1-GENERAL PESTICIDE SUITE
Sample Location	whd
Sample Type	Pre-Treatment / Raw

Analyte DOH Num	Analyte Name	Result Range	Result Quantity	Maximum Contaminant Level	Units	State Reporting Limit
0176	AROCHLOR 1248	LT	0.5000		ug/L	0.5000
0177	AROCHLOR 1254	LT	0.5000		ug/L	0.5000
0178	AROCHLOR 1260	LT	1.0000		ug/L	1.0000
0179	BROMACIL	LT	0.2000		ug/L	0.2000
0180	AROCHLOR 1016	LT	0.4000		ug/L	0.4000
0254	FLUORENE	LT	0.2000		ug/L	0.2000

Records 26 - 31 of 31

Links to external resources are provided as a public service and do not imply endorsement by the Washington State Department of Health

Department of Health, Office of Drinking Water

Street Address:
243 Israel Road S.E. 2nd floor
Tumwater, WA 98501

Mail:
PO BOX 47822
Olympia, WA 98504-7822

Phone: (360) 236-3100

Send inquiries about DOH and its programs to the Health Consumer Assistance Office
Comments or questions regarding this Web site? Send email to Environmental Health Application Testing and Support or call 360-236-3113.

Washington State Department of Health

Division of Environmental Health
Office of Drinking Water

View Sample Detail - WSID 99800W - ZILLAH, CITY OF

Collect Date	6/14/2001
Lab Number	081
Lab Name	Laucks Testing Lab, Inc - Seattle
Sample Number	76818
Source	03
Analyte Group	SOC-SYNTHETIC ORGANIC CONTAMINANTS
Test Panel	FUMIGANT-SOIL FUMIGANTS
Sample Location	~~3RD AV~~E WELL

Analyte DOH Num	Analyte Name	Result Range	Result Quantity	Maximum Contaminant Level	Units	State Reporting Limit
0102	EDB (ETHYLENE DIBROMIDE)	LT	0.0200	0.0500	ug/L	0.0200
0103	DBCP	LT	0.0400	0.2000	ug/L	0.0400

Records 1 - 2 of 2

Home Page | Find Water Systems | Find Water Quality | Downloads/Reports

DOH Home | Division of Environmental Health | Drinking Water Home | Drinking Water Contacts
Access Local Health | Privacy Notice | Disclaimer/Copyright Information

Links to external resources are provided as a public service and do not imply endorsement by the Washington State Department of Health

Office of Drinking Water
243 Israel Road SE
P.O. Box 47849
Tumwater, WA 98501
(360) 236-3113

Send inquiries about DOH and its programs to the Health Consumer Assistance Office
Comments or questions regarding this Web site? Send mail to ODW Help Desk.

Last Update : 07/21/2006

Washington State Department of Health

Division of Environmental Health
Office of Drinking Water

View Sample Detail - WSID 99800W - ZILLAH, CITY OF

Collect Date	8/24/1998
Lab Number	081
Lab Name	Laucks Testing Lab, Inc - Seattle
Sample Number	56533
Source	03
Analyte Group	SOC-SYNTHETIC ORGANIC CONTAMINANTS
Test Panel	FUMIGANT-SOIL FUMIGANTS
Sample Location	WIPPCO WELL/AT WELL SITE

Analyte DOH Num	Analyte Name	Result Range	Result Quantity	Maximum Contaminant Level	Units	State Reporting Limit
0102	EDB (ETHYLENE DIBROMIDE)	LT	0.0200	0.0500	ug/L	0.0200
0103	DBCP	LT	0.0400	0.2000	ug/L	0.0400

Records 1 - 2 of 2

Home Page | Find Water Systems | Find Water Quality | Downloads/Reports

DOH Home | Division of Environmental Health | Drinking Water Home | Drinking Water Contacts
Access Local Health | Privacy Notice | Disclaimer/Copyright Information

Links to external resources are provided as a public service and do not imply endorsement by the Washington State Department of Health

Office of Drinking Water
243 Israel Road SE
P.O. Box 47849
Tumwater, WA 98501
(360) 236-3113

Send inquiries about DOH and its programs to the Health Consumer Assistance Office
Comments or questions regarding this Web site? Send mail to ODW Help Desk.

Last Update : 07/21/2006

RADIONUCLIDE ANALYSIS - RAINIER WELL

TestAmerica
THE LEADER IN ENVIRONMENTAL TESTING

TestAmerica Laboratories, Inc
2800 George Washington Wa
Richland, WA 9935
Tel: (509) 375-313
Fax: (509) 375-559

RADIONUCLIDES
Report of Analysis

Date Collected: (MM/DD/YY) 07/03/12 @ 9:30am	System Group Type: (circle one) (A) B Other:
Water System ID Number: 99800W	System Name: City of Zillah
Lab # - Sample #: 028-45274	County: Yakima
Sample Location: S01 Rainier Well	Source Number(s): (list sources if blended or composited) : S01
Sample Purpose: (check appropriate box) X RC – Routine/Compliance (satisfies monitoring requirements) ☐ C – Confirmation (confirmation of chemical result) * ☐ I – Investigative (does not satisfy monitoring requirements) ☐ O – Other (specify – does not satisfy monitoring requirements)	Date Received: (MM/DD/YY) 07/06/12 Date Analyzed: (MM/DD/YY) 07/19/12 Date Reported: (MM/DD/YY) 07/23/12 Sampler Comments:
Sample Composition: (check appropriate box) X S - Single Source ☐ B - Blended (list sources in 'Source Number(s)' field) ☐ C - Composite(list sources in 'Source Number(s)' field) ☐ D - Distribution sample	Sample Type: (check one) X Untreated (raw) ☐ Treated ☐ Unknown Sample Collected by: (name) _____ Phone Number: _____
Send Report to: Cascade Analytical, Inc. 1008 W. Ahtanum Road Union Gap, WA 98903 J2G060430 / 45274 / MVG3J	Bill to: (client name) Cascade Analytical, Inc. Sample ID: 12-C012706

EPA REGULATED AND STATE REGULATED OR REQUIERED

DOH #	ANALYTES	LAB MDA	RESULTS	UNITS	DATE ANALYZED	MCL	METHOD/Analyst initials
(Additional analysis is required beyond gross alpha and radium 228 under specified conditions listed.)							
165	Gross alpha	3.11	7.62	pCi/L	7/19/12	--	EPA 900.0 / T.M.
166	Radium 228			pCi/L			EPA 904.0 / T.M.
*Determine radium 226 activity only if gross alpha activity plus radium 228 activity is greater than 5.0 pCi/L**							
39	Radium 226*			pCi/L		--	EPA 903.1 / T.M.
*Uranium activity if gross alpha activity is greater than 15.0 pCi/L ** *							
105	Uranium** (mass)			µg/L		30	
105	Uranium** (activity)			pCi/L		20**	
Depending on the foregoing data determine the following:							
40	Radium 226 + 228			pCi/L		5	EPA 903.1 & EPA 904.0
40	Gross alpha*** + radium 228			pCi/L		5	EPA 900.0 & EPA 904.0
41	Gross alpha minus uranium and Radon			pCi/L		15	

NOTES:

***Confirmation:** Include the original lab number, sample number, and collection date of original sample in either lab or sampler comments section.

MCL (maximum contaminant level): If the contaminant amount exceeds the MCL, please contact your regional DOH office to determine follow-up actions.

MDA: Minimum Detectable Amount.

NA (Not Analyzed): In the results column, indicates this compound was not included in the current analysis.

TestAmerica Laboratories, Inc.
2800 George Washington Way
Richland, WA 99354
Tel. (509) 375-3131
Fax (509) 375-5590

THE LEADER IN ENVIRONMENTAL TESTING

RADIONUCLIDE ANALYSES REPORT

System ID No.: 99800W	System Name: City of Zillah	
Lab/Sample No: 02842034	Date Collected: 8/30/10 @ 12:00pm	DOH Source No: S01
Multiple Source Nos:	Sample Type: B	Sample Purpose: C
Date Received: 9/07/10	Date Reported: 10/26/10	Supervisor: JC
	Date Analyzed: 10/15/10	Analyst: TW
County: Yakima	Group : A	
Sample Location: S01 Rainier Well 605 Rainier Ave., Zillah, WA 98953		
Send Report To: Cascade Analytical, Inc. 1008 W. Ahtanum Rd. Union Gap, WA 98903 J0I080552 / 42034 / L6NPH	Bill To: Same Adress Sample ID: 10-C017449	

DOH #	ANALYTES	LAB MDA	RESULTS	UNITS	DATE ANALYZED	MCL	(ANALYST'S INITIALS) & METHOD USED
EPA/STATE REGULATED (These analyses should be performed in order as listed)							
165	Gross Alpha	3.30	11.4	pCi/L	10/15/10	--	TW - EPA 900.0
166	Radium 228	0.84	ND	pCi/L	9/30/10		TM - EPA 904.0
*Determine Radium 226 activity if Gross Alpha is greater than 5.0 pCi/L**							
39	Radium 226*	0.11	ND	pCi/L	9/23/10	--	TM - EPA 903.1
*Determine Uranium activity if Gross Alpha is greater than 15.0 pCi/L ** *							
105	Uranium** (mass)			µg/L		30	TN - ASTM D5174
105	Uranium** (activity)			pCi/L		20**	
Depending on the foregoing data determine the following (must be completed if data is available):							
40	Radium 226 + 228	0.95	ND	pCi/L	9/23 & 9/30/10	5	TM - 904.0 & 903.1
40	Gross Alpha*** + Radium 228			pCi/L		5	EPA 900.0 & 904.0
41	Gross Alpha minus Uranium			pCi/L		15	
Do the following only if specifically requested by the client or the state							
42	Gross Beta****			pCi/L		50	
43	Tritium****			pCi/L		20,000	
44	Strontium 90****			pCi/L		8	
107	Cesium 134****			pCi/L		***	
108	Iodine 131****			pCi/L		***	

NOTES:

MCL (Maximum Contaminant Level): If the contaminant amount exceeds the MCL, immediately contact your regional DOH office.

MDA: Minimum Detectable Amount.

NA (Not Analyzed): use in the results column for compounds not included in the current analysis.

ND (Not Detected): use in the results column for compounds analyzed and not detected at a level greater than or equal to the MDA.

* **If Gross Alpha is less than, or equal to, 5 pCi/L**, it may be assumed that the Alpha activity is entirely due to Radium 226 (i.e., Radium 226 would not need to be run). The Alpha activity is then added to the Radium 228 activity (i.e., Beta activity) for MCL determinations. If the sum of the Alpha activity plus the Radium 228 activity is greater than 5 pCi/L, Radium 226 activity must then be determined for water system compliance purposes (i.e., Radium 226 + Radium 228 activity)

** **Uranium's MCL is given in mass terms (µg/L).** When Uranium is determined by mass methods, it must be converted to activity levels (pCi/L) for calculation of the MCL (Gross Alpha less Uranium). A conversion factor of 0.67 pCi/l per µg/L should be used. Uranium needs to be determined only when the Gross Alpha exceeds 15 pCi/L.

*** Use Gross Alpha in lieu of Radium 226 when the Gross Alpha is less than, or equal to, 5.0 pCi/L

**** **The MCL for beta particle and photon radioactivity from man-made radionuclides** is the average annual concentration which shall not produce an annual dose equivalent to the total body or any internal organ greater than four millirem/yr.

Comments: All QC results are within acceptance limits unless noted on back.

TestAmerica Laboratories, Inc.
2800 George Washington Way
Richland, WA 93354
Tel. (509) 375-3131
Fax (509) 375-5590

THE LEADER IN ENVIRONMENTAL TESTING

RADIONUCLIDE ANALYSES REPORT

System ID No.: 99800W	System Name: CITY OF ZILLAH	
Lab/Sample No: 02836957	Date Collected: 12-12-07	DOH Source No: SO1
Multiple Source Nos:	Sample Type: B	Sample Purpose: C
Date Received: 12-14-07	Date Reported: 01-28-08	Supervisor: KM
	Date Analyzed: 01-24-08	Analyst: LA
County: YAKIMA	Group : A	
Sample Location: RAINIER WELL		
Send Report To: CASCADE ANALYTICAL 1008 W. AHTANUM ROAD # 2 UNION GAP, WA 98903 J7L170196, SDG#36957, REPORT# 38186	Bill To: Cascade Analytical PATSY CHAMPOUX CLIENT SAMPLE ID # 07-C023607 SO1	

DOH #	ANALYTES	LAB MDA	RESULTS	UNITS	DATE ANALYZED	MCL	(ANALYST'S INITIALS) & METHOD USED
EPA/STATE REGULATED (These analyses should be performed in order as listed)							
165	Gross Alpha	2.42	9.71	pCi/L	12-31-07	--	LA - EPA 900.0
166	Radium 228	0.48	0.20	pCi/L	01-24-08		TM - EPA 904.0
*Determine Radium 226 activity if Gross Alpha is greater than 5.0 pCi/L**							
39	Radium 226*	0.09	0.06	pCi/L	01-17-08	--	SB - EPA 903.1
*Determine Uranium activity if Gross Alpha is greater than 15.0 pCi/L ** *							
105	Uranium** (mass)			µg/L		30	
105	Uranium** (activity)			pCi/L		20**	
Depending on the foregoing data determine the following (must be completed if data is available):							
40	Radium 226 + 228	0.57	0.26	pCi/L		5	
40	Gross Alpha*** + Radium 228			pCi/L		5	
41	Gross Alpha minus Uranium			pCi/L		15	
Do the following only if specifically requested by the client or the state							
42	Gross Beta****			pCi/L		50	
43	Tritium****			pCi/L		20,000	
44	Strontium 90*****			pCi/L		8	
107	Cesium 134****			pCi/L		***	
108	Iodine 131****			pCi/L		***	

NOTES:

MCL (Maximum Contaminant Level): If the contaminant amount exceeds the MCL, immediately contact your regional DOH office.

MDA: Minimum Detectable Amount.

NA (Not Analyzed): use in the results column for compounds not included in the current analysis.

ND (Not Detected): use in the results column for compounds analyzed and not detected at a level greater than or equal to the MDA.

* **If Gross Alpha is less than, or equal to, 5 pCi/L,** it may be assumed that the Alpha activity is entirely due to Radium 226 (i.e., Radium 226 would not need to be run). The Alpha activity is then added to the Radium 228 activity (i.e., Beta activity) for MCL determinations. If the sum of the Alpha activity plus the Radium 228 activity is greater than 5 pCi/L, Radium 226 activity must then be determined for water system compliance purposes (i.e., Radium 226 + Radium 228 activity)

** **Uranium's MCL is given in mass terms (µg/L).** When Uranium is determined by mass methods, it must be converted to activity levels (pCi/L) for calculation of the MCL (Gross Alpha less Uranium). A conversion factor of 0.67 pCi/l per µg/L should be used. Uranium needs to be determined only when the Gross Alpha exceeds 15 pCi/L.

*** Use Gross Alpha in lieu of Radium 226 when the Gross Alpha is less than, or equal to, 5.0 pCi/L

**** **The MCL for beta particle and photon radioactivity from man-made radionuclides** is the average annual concentration which shall not produce an annual dose equivalent to the total body or any internal organ greater than four millirem/yr.

Comments: All QC results are within acceptance limits unless noted on back

TestAmerica Laboratories, Inc.
2800 George Washington Way
Richland, WA 93354
Tel. (509) 375-3131
Fax (509) 375-5590

THE LEADER IN ENVIRONMENTAL TESTING

RADIONUCLIDE ANALYSES REPORT

System ID No.: 99800W	System Name: CITY OF ZILLAH	
Lab/Sample No: 02836091	Date Collected: 09-24-07	DOH Source No: SO1
Multiple Source Nos:	Sample Type: B	Sample Purpose: C
Date Received: 09-26-07	Date Reported: 11-23-07	Supervisor: KM
	Date Analyzed: 11-17-07	Analyst: SB
County: YAKIMA	Group : A	
Sample Location: RAINIER WELL		
Send Report To: CASCADE ANALYTICAL 1008 W. AHTANUM ROAD # 2 UNION GAP, WA 98903 J7I270128, SDG#36091, REPORT# 37460	Bill To: Cascade Analytical CLIENT SAMPLE ID # 07-C017838 SO1	

DOH #	ANALYTES	LAB MDA	RESULTS	UNITS	DATE ANALYZED	MCL	(ANALYST'S INITIALS) & METHOD USED
EPA/STATE REGULATED (These analyses should be performed in order as listed)							
165	Gross Alpha	2.18	3.24	pCi/L	10-17-07	--	LR - EPA 900.0
166	Radium 228	0.56	0.20	pCi/L	11-17-07		AL - EPA 904.0
*Determine Radium 226 activity if Gross Alpha is greater than 5.0 pCi/L**							
39	Radium 226*	0.21	0.002	pCi/L	10-29-07	--	AL - EPA 903.1
*Determine Uranium activity if Gross Alpha is greater than 15.0 pCi/L ** *							
105	Uranium** (mass)			µg/L		30	EA - ASTM D5174
105	Uranium** (activity)			pCi/L		20**	
Depending on the foregoing data determine the following (must be completed if data is available):							
40	Radium 226 + 228	0.77	0.22	pCi/L		5	
40	Gross Alpha*** + Radium 228			pCi/L		5	
41	Gross Alpha minus Uranium			pCi/L		15	LR - 900.0 & D5174
Do the following only if specifically requested by the client or the state							
42	Gross Beta****			pCi/L		50	
43	Tritium****			pCi/L		20,000	
44	Strontium 90****			pCi/L		8	
107	Cesium 134****			pCi/L		***	
108	Iodine 131****			pCi/L		***	

NOTES:

MCL (Maximum Contaminant Level): If the contaminant amount exceeds the MCL, immediately contact your regional DOH office.

MDA: Minimum Detectable Amount.

NA (Not Analyzed): use in the results column for compounds not included in the current analysis.

ND (Not Detected): use in the results column for compounds analyzed and not detected at a level greater than or equal to the MDA.

* **If Gross Alpha is less than, or equal to, 5 pCi/L**, it may be assumed that the Alpha activity is entirely due to Radium 226 (i.e., Radium 226 would not need to be run). The Alpha activity is then added to the Radium 228 activity (i.e., Beta activity) for MCL determinations. If the sum of the Alpha activity plus the Radium 228 activity is greater than 5 pCi/L, Radium 226 activity must then be determined for water system compliance purposes (i.e., Radium 226 + Radium 228 activity)

** **Uranium's MCL is given in mass terms (µg/L).** When Uranium is determined by mass methods, it must be converted to activity levels (pCi/L) for calculation of the MCL (Gross Alpha less Uranium). A conversion factor of 0.67 pCi/l per µg/L should be used. Uranium needs to be determined only when the Gross Alpha exceeds 15 pCi/L.

*** Use Gross Alpha in lieu of Radium 226 when the Gross Alpha is less than, or equal to, 5.0 pCi/L

**** **The MCL for beta particle and photon radioactivity from man-made radionuclides** is the average annual concentration which shall not produce an annual dose equivalent to the total body or any internal organ greater than four millirem/yr.

Comments: All QC results are within acceptance limits unless noted on back.

Washington State Department of Health

Division of Environmental Health
Office of Drinking Water

View Sample Detail - WSID 99800W - ZILLAH, CITY OF

Collect Date	6/27/2007
Lab Number	028
Lab Name	TestAmerica - Richland
Sample Number	51021
Source	01
Analyte Group	RAD-RADIONUCLIDES
Test Panel	RAD-RADIONUCLIDES
Sample Location	rainier well

Analyte DOH Num	Analyte Name	Result Range	Result Quantity	Maximum Contaminant Level	Units	State Reporting Limit
0165	GROSS ALPHA	EQ	11.7000		pCi/L	3.0000
0166	RADIUM 228	EQ	0.5300	5.0000	pCi/L	1.0000

Records 1 - 2 of 2

Home Page | Find Water Systems | Find Water Quality | Downloads/Reports

DOH Home | Division of Environmental Health | Drinking Water Home | Drinking Water Contacts
Access Local Health | Privacy Notice | Disclaimer/Copyright Information

Links to external resources are provided as a public service and do not imply endorsement by the Washington State Department of Health

Office of Drinking Water
243 Israel Road SE
P.O. Box 47849
Tumwater, WA 98501
(360) 236-3113

Send inquiries about DOH and its programs to the Health Consumer Assistance Office
Comments or questions regarding this Web site? Send mail to ODW Help Desk.

Last Update : 07/21/2006

Washington State Department of Health

Division of Environmental Health
Office of Drinking Water

View Sample Detail - WSID 99800W - ZILLAH, CITY OF

Collect Date	6/25/2007
Lab Number	028
Lab Name	TestAmerica - Richland
Sample Number	50512
Source	01
Analyte Group	RAD-RADIONUCLIDES
Test Panel	RAD-RADIONUCLIDES
Sample Location	rainier well s01

Analyte DOH Num	Analyte Name	Result Range	Result Quantity	Maximum Contaminant Level	Units	State Reporting Limit
0039	RADIUM 226	EQ	0.0300	3.0000	pCi/L	1.0000

Records 1 - 1 of 1

Home Page | Find Water Systems | Find Water Quality | Downloads/Reports

DOH Home | Division of Environmental Health | Drinking Water Home | Drinking Water Contacts
Access Local Health | Privacy Notice | Disclaimer/Copyright Information

Links to external resources are provided as a public service and do not imply endorsement by the Washington State Department of Health

Office of Drinking Water
243 Israel Road SE
P.O. Box 47849
Tumwater, WA 98501
(360) 236-3113

Send inquiries about DOH and its programs to the Health Consumer Assistance Office
Comments or questions regarding this Web site? Send mail to ODW Help Desk.

Last Update : 07/21/2006

RADIONUCLIDE ANALYSIS - 3RD AVENUE WELL

TestAmerica Laboratories, Inc.
2800 George Washington Way
Richland, WA 93354
Tel. (509) 375-3131
Fax (509) 375-5590

THE LEADER IN ENVIRONMENTAL TESTING

RADIONUCLIDE ANALYSES REPORT

System ID No.: 99800W	System Name: City of Zillah	
Lab/Sample No: 02842193	Date Collected: 9/23/10 @ 10:15am	DOH Source No: S02
Multiple Source Nos:	Sample Type: B	Sample Purpose: C
Date Received: 9/24/10	Date Reported: 11/03/10	Supervisor: JC
	Date Analyzed: 10/30/10	Analyst: TW
County: Yakima	Group : A	
Sample Location: Third Avenue S02 Zillah		
Send Report To: Cascade Analytical, Inc. 1008 W. Ahtanum Rd. Union Gap, WA 98903 J0J080447 / 42193 / L757K	Bill To: Same Adress Sample ID: 10-C019609	

DOH #	ANALYTES	LAB MDA	RESULTS	UNITS	DATE ANALYZED	MCL	(ANALYST'S INITIALS) & METHOD USED
	EPA/STATE REGULATED (These analyses should be performed in order as listed)						
165	Gross Alpha	1.5	ND	pCi/L	10/30/10	--	TW - EPA 900.0
166	Radium 228	0.59	ND	pCi/L	10/28/10		TM - EPA 904.0
	*Determine Radium 226 activity if Gross Alpha is greater than 5.0 pCi/L**						
39	Radium 226*			pCi/L		--	TM - EPA 903.1
	Determine Uranium activity if Gross Alpha is greater than 15.0 pCi/L **						
105	Uranium** (mass)			µg/L		30	TN - ASTM D5174
105	Uranium** (activity)			pCi/L		20**	
	Depending on the foregoing data determine the following (must be completed if data is available):						
40	Radium 226 + 228			pCi/L		5	TM - 904.0 & 903.1
40	Gross Alpha*** + Radium 228	2.09	ND	pCi/L	10/28 & 10/30	5	EPA 900.0 & 904.0
41	Gross Alpha minus Uranium			pCi/L		15	
	Do the following only if specifically requested by the client or the state						
42	Gross Beta****			pCi/L		50	
43	Tritium****			pCi/L		20,000	
44	Strontium 90****			pCi/L		8	
107	Cesium 134****			pCi/L		***	
108	Iodine 131****			pCi/L		***	

OTES:

ICL (Maximum Contaminant Level): If the contaminant amount exceeds the MCL, immediately contact your regional DOH office.

IDA: Minimum Detectable Amount.

IA (Not Analyzed): use in the results column for compounds not included in the current analysis.

ID (Not Detected): use in the results column for compounds analyzed and not detected at a level greater than or equal to the MDA.

If Gross Alpha is less than, or equal to, 5 pCi/L, it may be assumed that the Alpha activity is entirely due to Radium 226 (i.e., Radium 226 would not ed to be run). The Alpha activity is then added to the Radium 228 activity (i.e., Beta activity) for MCL determinations. If the sum of the Alpha activity us the Radium 228 activity is greater than 5 pCi/L, Radium 226 activity must then be determined for water system compliance purposes (i.e., Radium 26 + Radium 228 activity)

* **Uranium's MCL is given in mass terms (µg/L).** When Uranium is determined by mass methods, it must be converted to activity levels (pCi/L) for lculation of the MCL (Gross Alpha less Uranium). A conversion factor of 0.67 pCi/l per µg/L should be used. Uranium needs to be determined only hen the Gross Alpha exceeds 15 pCi/L.

** Use Gross Alpha in lieu of Radium 226 when the Gross Alpha is less than, or equal to, 5.0 pCi/L

*** **The MCL for beta particle and photon radioactivity from man-made radionuclides** is the average annual concentration which shall not produce annual dose equivalent to the total body or any internal organ greater than four millirem/yr.

omments: All QC results are within acceptance limits unless noted on back.

TestAmerica Laboratories, Inc.
2800 George Washington Way
Richland, WA 93354
Tel. (509) 375-3131
Fax (509) 375-5590

THE LEADER IN ENVIRONMENTAL TESTING

RADIONUCLIDE ANALYSES REPORT

System ID No.: 99800W	System Name: CITY OF ZILLAH	
Lab/Sample No: 02836091	Date Collected: 09-24-07	DOH Source No: SO2
Multiple Source Nos:	Sample Type: B	Sample Purpose: C
Date Received: 09-26-07	Date Reported: 11-23-07	Supervisor: KM
	Date Analyzed: 11-17-07	Analyst: SB
County: YAKIMA	Group : A	
Sample Location: THIRD AVENUE WELL		
Send Report To: CASCADE ANALYTICAL 1008 W. AHTANUM ROAD # 2 UNION GAP, WA 98903 J7I270128, SDG#36091, REPORT# 37460	Bill To: Cascade Analytical CLIENT SAMPLE ID # 07-C017839 SO2	

DOH #	ANALYTES	LAB MDA	RESULTS	UNITS	DATE ANALYZED	MCL	(ANALYST'S INITIALS) & METHOD USED
EPA/STATE REGULATED (These analyses should be performed in order as listed)							
165	Gross Alpha			pCi/L		--	LR - EPA 900.0
166	Radium 228	0.57	0.15	pCi/L	11-01-07		AL - EPA 904.0
*Determine Radium 226 activity if Gross Alpha is greater than 5.0 pCi/L**							
39	Radium 226*			pCi/L		--	AL - EPA 903.1
Determine Uranium activity if Gross Alpha is greater than 15.0 pCi/L **							
105	Uranium** (mass)			µg/L		30	EA - ASTM D5174
105	Uranium** (activity)			pCi/L		20**	
Depending on the foregoing data determine the following (must be completed if data is available):							
40	Radium 226 + 228			pCi/L		5	
40	Gross Alpha*** + Radium 228			pCi/L		5	
41	Gross Alpha minus Uranium			pCi/L		15	LR - 900.0 & D5174
Do the following only if specifically requested by the client or the state							
42	Gross Beta****			pCi/L		50	
43	Tritium****			pCi/L		20,000	
44	Strontium 90****			pCi/L		8	
107	Cesium 134****			pCi/L		***	
108	Iodine 131****			pCi/L		***	

NOTES:

MCL (Maximum Contaminant Level): If the contaminant amount exceeds the MCL, immediately contact your regional DOH office.

MDA: Minimum Detectable Amount.

NA (Not Analyzed): use in the results column for compounds not included in the current analysis.

ND (Not Detected): use in the results column for compounds analyzed and not detected at a level greater than or equal to the MDA.

* **If Gross Alpha is less than, or equal to, 5 pCi/L**, it may be assumed that the Alpha activity is entirely due to Radium 226 (i.e., Radium 226 would not need to be run). The Alpha activity is then added to the Radium 228 activity (i.e., Beta activity) for MCL determinations. If the sum of the Alpha activity plus the Radium 228 activity is greater than 5 pCi/L, Radium 226 activity must then be determined for water system compliance purposes (i.e., Radium 226 + Radium 228 activity)

** **Uranium's MCL is given in mass terms (µg/L).** When Uranium is determined by mass methods, it must be converted to activity levels (pCi/L) for calculation of the MCL (Gross Alpha less Uranium). A conversion factor of 0.67 pCi/l per µg/L should be used. Uranium needs to be determined only when the Gross Alpha exceeds 15 pCi/L.

*** Use Gross Alpha in lieu of Radium 226 when the Gross Alpha is less than, or equal to, 5.0 pCi/L

**** **The MCL for beta particle and photon radioactivity from man-made radionuclides** is the average annual concentration which shall not produce an annual dose equivalent to the total body or any internal organ greater than four millirem/yr.

Comments: All QC results are within acceptance limits unless noted on back.

Washington State Department of Health

Division of Environmental Health
Office of Drinking Water

View Sample Detail - WSID 99800W - ZILLAH, CITY OF

Collect Date	3/28/2007
Lab Number	028
Lab Name	TestAmerica - Richland
Sample Number	34118
Source	02
Analyte Group	RAD-RADIONUCLIDES
Test Panel	RAD-RADIONUCLIDES
Sample Location	3rd ave

Analyte DOH Num	Analyte Name	Result Range	Result Quantity	Maximum Contaminant Level	Units	State Reporting Limit
0166	RADIUM 228	EQ	0.7400	5.0000	pCi/L	1.0000

Records 1 - 1 of 1

Home Page | Find Water Systems | Find Water Quality | Downloads/Reports

DOH Home | Division of Environmental Health | Drinking Water Home | Drinking Water Contacts
Access Local Health | Privacy Notice | Disclaimer/Copyright Information

Links to external resources are provided as a public service and do not imply endorsement by the Washington State Department of Health

Office of Drinking Water
243 Israel Road SE
P.O. Box 47849
Tumwater, WA 98501
(360) 236-3113

Send inquiries about DOH and its programs to the Health Consumer Assistance Office
Comments or questions regarding this Web site? Send mail to ODW Help Desk.

Last Update : 07/21/2006

Washington State Department of Health

Division of Environmental Health
Office of Drinking Water

View Sample Detail - WSID 99800W - ZILLAH, CITY OF

Collect Date	3/28/2007
Lab Number	028
Lab Name	TestAmerica - Richland
Sample Number	34118
Source	02
Analyte Group	RAD-RADIONUCLIDES
Test Panel	RAD-RADIONUCLIDES
Sample Location	3rd ave

Analyte DOH Num	Analyte Name	Result Range	Result Quantity	Maximum Contaminant Level	Units	State Reporting Limit
0166	RADIUM 228	EQ	0.7400	5.0000	pCi/L	1.0000

Records 1 - 1 of 1

Home Page | Find Water Systems | Find Water Quality | Downloads/Reports

DOH Home | Division of Environmental Health | Drinking Water Home | Drinking Water Contacts
Access Local Health | Privacy Notice | Disclaimer/Copyright Information

Links to external resources are provided as a public service and do not imply endorsement by the Washington State Department of Health

Office of Drinking Water
243 Israel Road SE
P.O. Box 47849
Tumwater, WA 98501
(360) 236-3113

Send inquiries about DOH and its programs to the Health Consumer Assistance Office
Comments or questions regarding this Web site? Send mail to ODW Help Desk.

Last Update : 07/21/2006

RADIONUCLIDE ANALYSIS - WIPPCO WELL

TestAmerica
THE LEADER IN ENVIRONMENTAL TESTING

TestAmerica Laboratories, In
2800 George Washington Wa
Richland, WA 9935
Tel: (509) 375-313
Fax: (509) 375-559

RADIONUCLIDES
Report of Analysis

Date Collected: (MM/DD/YY) 09/25/12 @ 11:00 am	System Group Type: (circle one) (A) B Other:
Water System ID Number: 99800W	System Name: City of Zillah
Lab # - Sample #: 028-45765	County: Yakima
Sample Location: Third Ave Well (on Westwind Dr) in well house	Source Number(s): (list sources if blended or composited) : S03
Sample Purpose: (check appropriate box) X RC – Routine/Compliance (satisfies monitoring requirements) ☐ C – Confirmation (confirmation of chemical result) * ☐ I – Investigative (does not satisfy monitoring requirements) ☐ O – Other (specify – does not satisfy monitoring requirements)	Date Received: (MM/DD/YY) 09/27/12 Date Analyzed: (MM/DD/YY) 10/17/12 Date Reported: (MM/DD/YY) 10/18/12 Sampler Comments:
Sample Composition: (check appropriate box) X S - Single Source ☐ B - Blended (list sources in 'Source Number(s)' field) ☐ C - Composite(list sources in 'Source Number(s)' field) ☐ D - Distribution sample	Sample Type: (check one) ☒ Untreated (raw) ☐ Treated ☐ Unknown Sample Collected by: (name) _____ Phone Number: _____
Send Report to: Cascade Analytical, Inc. 1008 W. Ahtanum Road Union Gap, WA 98903 J2I270419 / 45765 / MWQH5	Bill to: (client name) Cascade Analytical, Inc. Sample ID: 12-C021254

EPA REGULATED AND STATE REGULATED OR REQUIERED

DOH #	ANALYTES	LAB MDA	RESULTS	UNITS	DATE ANALYZED	MCL	METHOD/Analyst initials
(Additional analysis is required beyond gross alpha and radium 228 under specified conditions listed)							
165	Gross alpha	2.59	4.45	pCi/L	10/04/12	--	EPA 900.0 / T.M.
166	Radium 228	0.62	ND	pCi/L	10/17/12		EPA 904.0 / T.M.
*Determine radium 226 activity only if gross alpha activity plus radium 228 activity is greater than 5.0 pCi/L**							
39	Radium 226*	0.14	ND	pCi/L	10/15/12	--	EPA 903.1 / T.M.
*Uranium activity if gross alpha activity is greater than 15.0 pCi/L **							
105	Uranium** (mass)			µg/L		30	
105	Uranium** (activity)			pCi/L		20**	
Depending on the foregoing data determine the following:							
40	Radium 226 + 228	0.76	ND	pCi/L	10/15 & 10/17	5	EPA 903.1 & EPA 904.0
40	Gross alpha*** + radium 228			pCi/L		5	EPA 900.0 & EPA 904.0
41	Gross alpha minus uranium and Radon			pCi/L		15	

NOTES:

***Confirmation:** Include the original lab number, sample number, and collection date of original sample in either lab or sampler comments section.

MCL (maximum contaminant level): If the contaminant amount exceeds the MCL, please contact your regional DOH office to determine follow-up actions.

MDA: Minimum Detectable Amount.

TestAmerica Laboratories, Inc.
2800 George Washington Way
Richland, WA 93354
Tel. (509) 375-3131
Fax (509) 375-5590

THE LEADER IN ENVIRONMENTAL TESTING

RADIONUCLIDE ANALYSES REPORT

System ID No.: 99800W	System Name: CITY OF ZILLAH	
Lab/Sample No: 02836957	Date Collected: 12-12-07	DOH Source No: S03
Multiple Source Nos:	Sample Type: B	Sample Purpose: C
Date Received: 12-14-07	Date Reported: 01-28-08	Supervisor: KM
	Date Analyzed: 01-24-08	Analyst: LA
County: YAKIMA	Group : A	
Sample Location: WIPPCO WELL		
Send Report To: CASCADE ANALYTICAL 1008 W. AHTANUM ROAD # 2 UNION GAP, WA 98903 J7L170196, SDG#36957, REPORT# 38186	Bill To: Cascade Analytical PATSY CHAMPOUX CLIENT SAMPLE ID # 07-C023606 SO3	

DOH #	ANALYTES	LAB MDA	RESULTS	UNITS	DATE ANALYZED	MCL	(ANALYST'S INITIALS) & METHOD USED
EPA/STATE REGULATED (These analyses should be performed in order as listed)							
165	Gross Alpha	1.29	10.1	pCi/L	12-31-07	--	LA - EPA 900.0
166	Radium 228	0.48	0.07	pCi/L	01-24-08		TM - EPA 904.0
*Determine Radium 226 activity if Gross Alpha is greater than 5.0 pCi/L**							
39	Radium 226*	0.13	0.07	pCi/L	01-17-08	--	SB - EPA 903.1
*Determine Uranium activity if Gross Alpha is greater than 15.0 pCi/L **							
105	Uranium** (mass)			µg/L		30	
105	Uranium** (activity)			pCi/L		20**	
Depending on the foregoing data determine the following (must be completed if data is available):							
40	Radium 226 + 228	0.61	0.14	pCi/L		5	
40	Gross Alpha*** + Radium 228			pCi/L		5	
41	Gross Alpha minus Uranium			pCi/L		15	
Do the following only if specifically requested by the client or the state							
42	Gross Beta****			pCi/L		50	
43	Tritium****			pCi/L		20,000	
44	Strontium 90****			pCi/L		8	
107	Cesium 134****			pCi/L		***	
108	Iodine 131****			pCi/L		***	

NOTES:

MCL (Maximum Contaminant Level): If the contaminant amount exceeds the MCL, immediately contact your regional DOH office.

MDA: Minimum Detectable Amount.

NA (Not Analyzed): use in the results column for compounds not included in the current analysis.

ND (Not Detected): use in the results column for compounds analyzed and not detected at a level greater than or equal to the MDA.

* **If Gross Alpha is less than, or equal to, 5 pCi/L,** it may be assumed that the Alpha activity is entirely due to Radium 226 (i.e., Radium 226 would not need to be run). The Alpha activity is then added to the Radium 228 activity (i.e., Beta activity) for MCL determinations. If the sum of the Alpha activity plus the Radium 228 activity is greater than 5 pCi/L, Radium 226 activity must then be determined for water system compliance purposes (i.e., Radium 226 + Radium 228 activity)

** **Uranium's MCL is given in mass terms (µg/L).** When Uranium is determined by mass methods, it must be converted to activity levels (pCi/L) for calculation of the MCL (Gross Alpha less Uranium). A conversion factor of 0.67 pCi/l per µg/L should be used. Uranium needs to be determined only when the Gross Alpha exceeds 15 pCi/L.

*** Use Gross Alpha in lieu of Radium 226 when the Gross Alpha is less than, or equal to, 5.0 pCi/L

**** **The MCL for beta particle and photon radioactivity from man-made radionuclides** is the average annual concentration which shall not produce an annual dose equivalent to the total body or any internal organ greater than four millirem/yr.

Comments: All QC results are within acceptance limits unless noted on back.

TestAmerica Laboratories, Inc.
2800 George Washington Way
Richland, WA 93354
Tel. (509) 375-3131
Fax (509) 375-5590

THE LEADER IN ENVIRONMENTAL TESTING

RADIONUCLIDE ANALYSES REPORT

System ID No.: 99800W	System Name: CITY OF ZILLAH	
Lab/Sample No: 02836091	Date Collected: 09-24-07	DOH Source No: SO3
Multiple Source Nos:	Sample Type: B	Sample Purpose: C
Date Received: 09-26-07	Date Reported: 11-23-07	Supervisor: KM
	Date Analyzed: 11-17-07	Analyst: SB
County: YAKIMA	Group : A	
Sample Location: WIPPCO WELL		
Send Report To: CASCADE ANALYTICAL 1008 W. AHTANUM ROAD # 2 UNION GAP, WA 98903 J7I270128, SDG#36091, REPORT# 37460	Bill To: Cascade Analytical CLIENT SAMPLE ID # 07-C017840 SO3	

DOH #	ANALYTES	LAB MDA	RESULTS	UNITS	DATE ANALYZED	MCL	(ANALYST'S INITIALS) & METHOD USED
EPA/STATE REGULATED (These analyses should be performed in order as listed)							
165	Gross Alpha	2.15	4.50	pCi/L	10-07-07	--	LR - EPA 900.0
166	Radium 228	0.50	0.52	pCi/L	11-17-07		AL - EPA 904.0
*Determine Radium 226 activity if Gross Alpha is greater than 5.0 pCi/L**							
39	Radium 226*	0.12	0.12	pCi/L	10-29-07	--	AL - EPA 903.1
Determine Uranium activity if Gross Alpha is greater than 15.0 pCi/L **							
105	Uranium** (mass)			µg/L		30	EA - ASTM D5174
105	Uranium** (activity)			pCi/L		20**	
Depending on the foregoing data determine the following (must be completed if data is available):							
40	Radium 226 + 228	0.62	0.64	pCi/L		5	
40	Gross Alpha*** + Radium 228			pCi/L		5	
41	Gross Alpha minus Uranium			pCi/L		15	LR - 900.0 & D5174
Do the following only if specifically requested by the client or the state							
42	Gross Beta****			pCi/L		50	
43	Tritium****			pCi/L		20,000	
44	Strontium 90****			pCi/L		8	
107	Cesium 134****			pCi/L		***	
108	Iodine 131****			pCi/L		***	

NOTES:

MCL (Maximum Contaminant Level): If the contaminant amount exceeds the MCL, immediately contact your regional DOH office.

MDA: Minimum Detectable Amount.

NA (Not Analyzed): use in the results column for compounds not included in the current analysis.

ND (Not Detected): use in the results column for compounds analyzed and not detected at a level greater than or equal to the MDA.

* **If Gross Alpha is less than, or equal to, 5 pCi/L**, it may be assumed that the Alpha activity is entirely due to Radium 226 (i.e., Radium 226 would not need to be run). The Alpha activity is then added to the Radium 228 activity (i.e., Beta activity) for MCL determinations. If the sum of the Alpha activity plus the Radium 228 activity is greater than 5 pCi/L, Radium 226 activity must then be determined for water system compliance purposes (i.e., Radium 226 + Radium 228 activity)

** **Uranium's MCL is given in mass terms (µg/L).** When Uranium is determined by mass methods, it must be converted to activity levels (pCi/L) for calculation of the MCL (Gross Alpha less Uranium). A conversion factor of 0.67 pCi/l per µg/L should be used. Uranium needs to be determined only when the Gross Alpha exceeds 15 pCi/L.

*** Use Gross Alpha in lieu of Radium 226 when the Gross Alpha is less than, or equal to, 5.0 pCi/L

**** **The MCL for beta particle and photon radioactivity from man-made radionuclides** is the average annual concentration which shall not produce an annual dose equivalent to the total body or any internal organ greater than four millirem/yr.

Comments: All QC results are within acceptance limits unless noted on back.

Washington State Department of Health

Division of Environmental Health
Office of Drinking Water

View Sample Detail - WSID 99800W - ZILLAH, CITY OF

Collect Date	6/27/2007
Lab Number	028
Lab Name	TestAmerica - Richland
Sample Number	51022
Source	03
Analyte Group	RAD-RADIONUCLIDES
Test Panel	RAD-RADIONUCLIDES
Sample Location	wippco well

Analyte DOH Num	Analyte Name	Result Range	Result Quantity	Maximum Contaminant Level	Units	State Reporting Limit
0165	GROSS ALPHA	EQ	5.5200		pCi/L	3.0000
0166	RADIUM 228	EQ	0.6800	5.0000	pCi/L	1.0000

Records 1 - 2 of 2

Home Page | Find Water Systems | Find Water Quality | Downloads/Reports

DOH Home | Division of Environmental Health | Drinking Water Home | Drinking Water Contacts
Access Local Health | Privacy Notice | Disclaimer/Copyright Information

Links to external resources are provided as a public service and do not imply endorsement by the Washington State Department of Health

Office of Drinking Water
243 Israel Road SE
P.O. Box 47849
Tumwater, WA 98501
(360) 236-3113

Send inquiries about DOH and its programs to the Health Consumer Assistance Office
Comments or questions regarding this Web site? Send mail to ODW Help Desk.

Last Update : 07/21/2006

LEAD & COPPER CHEMICAL ANALYSIS

RECEIVED OCT 2 3 2008

1008 W. Ahtanum Rd.
Union Gap, WA 98903
(509) 452-7707
Fax: (509) 452-7773

Billing Code: 04180
Batch #: 821591

CASCADE ANALYTICAL, INC.

3019 G.S. Center Rd.
Wenatchee, WA 98801
(509) 662-1888
Fax: (509) 662-8183

LCR TEST PANEL Lead and Copper
Distribution System • Report of Analyses

Water System ID Number 99800	System Group Type: (Circle one) A X B Other: (Specify)
Source: S93 (Distribution Samples)	System Name: City of Zillah
	County: Yakima
	Consecutive System? _____YES _____NO
Send Report to: City of Zillah Dolly Meyer PO Box 475 Zillah, WA 98953	Bill to: (Client Name) City of Zillah PO Box 475 Zillah, WA 98953
Sample Purpose: (Check Appropriate Box) [X] RC - Routine/Compliance (satisfies monitoring requirements) [ ] C - Confirmation (confirmation of chemical result) [ ] I - Investigative (does not satisfy monitoring requirements) [ ] O - Other (specify)	Date Received: (MM/DD/YY) 10 / 6 / 08 Date Analyzed: (MM/DD/YY) 10 / 23 / 08 Date Reported: (MM/DD/YY) 10 / 28 / 08 COMMENTS:

(DOH #) Analyte	(0023) Copper	(0009) Lead
State Reporting Level (SRL)	0.02 mg/l	0.001 mg/l
Regulatory Action Level	1.3 mg/l	0.015 mg/l
Analytical Method/Analyst's Initials	SM 3111B / BP	EPA 200.9 / BP

Lab Sample Number	Date Collected	Sample Location	Copper (mg/L)	Lead (mg/L)
10519394	9/25/08	505 Virginia Court	0.0760	0.0007
10519395	9/25/08	111 Northstone Parkway	0.118	0.0007
10519396	9/25/08	102 Northstone Parkway	0.0272	< 0.0005
10519397	9/25/08	107 Linda Street	0.184	0.0306
10519398	9/25/08	408 Edson St	< 0.02	0.0017
10519399	9/25/08	407 5th St	0.151	0.0013
10519400	9/25/08	Zillah Intermediate School	0.229	0.0024
10519401	10/ 6/08	Zillah Elementary School	0.398	< 0.0005
10519402	10/ 6/08	Zillah Middle School	0.189	< 0.0005
10519403	10/ 6/08	Zillah High School	< 0.02	0.0014

NOTES:

SRL (State Reporting Level): Indicates the minimum reporting level required by the Washington State Department of Health (DOH)

Action Level: The concentration of the 90th percentile sample of all six-month period distribution samples collected that, if exceeded, signals the system is in violation.

NA: Not Analyzed: In the results column, indicates this compound was not included in the current analysis.

ND (Not Detected): In the results column, indicates this compound was analyzed and not detected at a level greater than or equal to the SRL.

<(0.00X): Indicates the compound was not detected in the sample at or above the concentration indicated. (for labs using their own reporting level)

Comments:

1008 W. Ahtanum Rd.
Union Gap, WA 98903
(509) 452-7707
Fax: (509) 452-7773

3019 G.S. Center Rd.
Wenatchee, WA 98801
(509) 662-1888
Fax: (509) 662-8183

RECEIVED SEP 09 2011 BY:

CASCADE ANALYTICAL, INC.

Billing Code: 04180
Batch #: 157477

LCR TEST PANEL Lead and Copper
Distribution System • Report of Analyses

	System Group Type: (Circle one) A X B Other: (Specify)
Water System ID Number 99800W	System Name: City of Zillah
Source: S93 (Distribution Samples)	County: Yakima
	Consecutive System? _____YES _____NO
Send Report to: City of Zillah Dolly Meyer PO Box 475 Zillah, WA 98953	Bill to: (Client Name) City of Zillah PO Box 475 Zillah, WA 98953
Sample Purpose: (Check Appropriate Box) [X] RC - Routine/Compliance (satisfies monitoring requirements) [ ] C - Confirmation (confirmation of chemical result) [ ] I - Investigative (does not satisfy monitoring requirements) [ ] O - Other (specify)	Date Received: (MM/DD/YY) 8 / 25 / 11 Date Analyzed: (MM/DD/YY) 8 / 31 / 11 Date Reported: (MM/DD/YY) 9 / 2 / 11 COMMENTS:

(DOH #) Analyte	(0023) Copper	(0009) Lead
State Reporting Level (SRL)	0.02 mg/l	0.001 mg/l
Regulatory Action Level	1.3 mg/l	0.015 mg/l
Analytical Method/Analyst's Initials	SM 3111B /	EPA 200.9 / BB

Lab Sample Number	Date Collected	Sample Location	Copper (mg/L)	Lead (mg/L)
10516918	8/24/11	Intermediate School	0.185	0.00129
10516919	8/24/11	107 Linda St	0.330	0.00391
10516920	8/24/11	Zillah Elementary Schoo;	0.262	< 0.0005
10516921	8/24/11	Zillah Middle School	0.292	< 0.0005
10516922	8/24/11	Zillah High School	0.0709	0.00385
10516923	8/24/11	103 Second Ave	0.0407	< 0.0005
10516924	8/24/11	408 Edson	0.00580	0.00695
10516925	8/24/11	102 Northstone Parkway	0.0408	< 0.0005
10516926	8/24/11	506 N 8th St	0.0305	< 0.0005
10516927	8/24/11	505 Virginia Court	0.0149	< 0.0005

NOTES:

SRL (State Reporting Level): Indicates the minimum reporting level required by the Washington State Department of Health (DOH)

Action Level: The concentration of the 90th percentile sample of all six-month period distribution samples collected that, if exceeded, signals the system is in violation.

NA: Not Analyzed: In the results column, indicates this compound was not included in the current analysis.

ND (Not Detected): In the results column, indicates this compound was analyzed and not detected at a level greater than or equal to the SRL.

<(0.00X): Indicates the compound was not detected in the sample at or above the concentration indicated. (for labs using their own reporting level)

Comments:

LEAD & COPPER CONSUMER NOTICE CERTIFICATION FORM & CONSUMER NOTICE EXAMPLE

Lead and Copper Consumer Notice certification form

All Group A water systems that conduct lead and copper monitoring must provide individual sampling results to the persons at each sample location. (CFR 141.85 (d))

Notification of Results: The water system must provide the consumer notice as soon as possible, but no later than 30 days after learning the results.

Community water systems: You must provide individual sampling results to all residences for which you received lead and copper samples. In multi-unit structures, only notify each unit tested.

Nontransient noncommunity water systems (NTNCs): You must notify all consumers who use water from the sample tap, even if they do not receive a water bill. With prior approval from DOH, NTNC water systems can post the notice in public areas.

Certification to the state: DOH must receive a sample copy of one consumer notice and a signed certification form (below) within 90 days after the end of the monitoring period.

To meet this reporting requirement, you may:

- Use the DOH Consumer Notice Template.
- Use the applicable EPA Consumer Notice template.
- Prepare your own Consumer Notice in conjunction with the state.

If you choose to produce your own Consumer Notice, it must include all of the following:

1. The sample results of the tap tested.
2. An explanation of the health effects of lead.
3. Steps consumers can take to reduce exposure to lead in drinking water.
4. The water system's contact information.
5. The maximum contaminant level goal (MCLG) and action level for lead, and the definitions of these two terms.

If you are responsible for multiple water systems, you can send to the Office of Drinking Water:

- A list of the water systems you provided Consumer Notices to, with name and PWS ID number.
- Send one copy of the Consumer Notice you used.
- Send one completed certification form (below).

Lead and Copper Results: Consumer Notification Certification Form

The water system must complete this section. The signature below certifies that the notice contains all required elements.

Complete the following items (check all that apply):

☐ I mailed/delivered all Consumer Notices to the water users at all of the lead and copper sampling locations within 30 days of receiving the lead and copper results from the laboratory.

☐ **(For NTNC systems ONLY)** Notice posted at _____ on ___ / ___ / ____ within 30 days of receiving the lead and copper results from the laboratory. (***Only By Department Approval***)

_____ _____

Water System PWS ID

_____ _____ _____

Signature of owner or operator Position Date

Send a copy of the completed notice and this certification form to: Washington State Department of Health, Office of Drinking Water, Water Quality Section,PO Box 47822, Olympia WA 98504-7822 or fax to (360) 236-2252.

DOH Form 331-462-F

If you need this publication in alternate format, call (800) 525-0127. For TTY/TDD, call (800) 833-6388

Community Water System
CONSUMER NOTICE
Lead and Copper Water Sample Results

The _____ Water System, I.D. _____, is providing you with the lead and copper test results on the water sample collected at your location. Please share this notice with everyone who uses or drinks the water.

The results at _____

are: **lead** _____ **mg/L and copper** _____ **mg/L.**

The maximum contaminant level goal (MCLG) is the level of a contaminant in drinking water below which there are no known or expected risks to health. MCLGs allow for a margin of safety. The regulatory limits for lead and copper are called action levels. An exceedance occurs when the concentration of the lead or copper in more than 10 percent of the tap water samples exceeds an action level.

- The MCLG for lead is "0" and the action level is 15 ppb (or .015 mg/L).
- The MCLG and action level for copper is 1,300 ppb (or 1.3 mg/L).

Lead or copper action level exceedances will trigger corrosion control treatment or other requirements. We will notify all water users if our system exceeds the lead action level.

For more information, please contact: _____
(owner or operator)

at ( ) - or _____
(phone number) (address)

This notice is sent to you by _____ Water System on ___/___/_____

How Lead Gets Into Water

Lead in drinking water most often comes from water distribution lines or household plumbing rather than from the water system source. Plumbing sources can include lead pipes, lead solder, faucets, valves, and other components made of brass. Lead from other sources (such as lead-based paint and contaminated dust or soil) can increase a person's overall exposure, which adds to the effects of lead in water.

Potential Health Effects of Lead

The greatest risk of lead exposure is to infants, young children, and pregnant women. Lead can cause serious health problems if too much enters the body. Lead is stored in the bones and can be released later in life. Lead can cause damage to the brain and kidneys, interfere with production of red blood cells that carry oxygen, and may result in lowered IQ in children. During pregnancy, the child receives lead from the mother's bones, which may affect brain development. Low levels of lead can affect adults with high blood pressure or kidney problems.

How Copper Gets Into Water

Copper is a mineral and natural component in soils. In the correct amounts, it is an essential nutrient for humans and plants. In Washington State, most copper in drinking water comes from corrosion of household plumbing. Plumbing sources can include copper pipe and brass fixtures. Copper from plumbing corrosion can accumulate overnight.

Potential Health Effects of Copper

Although copper is an essential mineral in the diet, too much copper can cause health problems. Copper is widely distributed within the tissues of the body, but accumulates primarily in the liver and kidneys. A single dose of 15 mg of copper can cause nausea, vomiting, diarrhea, and intestinal cramps. Severe cases of copper poisoning have led to anemia and to disruption of liver and kidney functions. Individuals with Wilson's or Menke's diseases are at higher risk from copper exposure.

How you can reduce exposure:

- When your water has been sitting for several hours, flush the pipe by running the cold-water tap until the water is noticeably colder before using the water for drinking or cooking. **(The longer water has been sitting in the pipes, the more dissolved metals it may contain).**
- Use only cold water for drinking, cooking, and making baby formula. Hot water may contain higher levels of lead or copper.
- Frequently clean the filter screens and aerators in faucets to remove captured particles.
- If building or remodeling, only use "lead free" or low lead piping and materials. Avoid using copper piping or brass fixtures for locations where water will be consumed or used in food preparation (such as kitchen or bathroom sinks).

Sistema comunitario de agua
AVISO al CONSUMIDOR
Resultados de las muestras de agua para plomo y cobre

El sistema de agua _____ número de identificación _____, le presenta con los resultados de plomo y cobre en la muestra de agua colectada en su ubicación. Por favor, comparta los resultados con todos quienes usan o beben el agua.

Los resultados para: _____

son: _____ **mg/L de plomo y ___ mg/L de cobre.**

El límite del nivel máximo de contaminantes (LNMC) distingue entre niveles de contaminantes por debajo de lo cual no hay riesgos para la salud conocidos o esperados. Los LNMC toman en cuenta el margen de seguridad. Los límites regulatorios para plomo y cobre se llaman niveles de acción. Se considera sobrepasar los límites cuando la concentración del nivel de plomo o cobre en más de10 por ciento de las muestras de agua potable excede un nivel de acción.

- El LNMC para plomo es "0" y el nivel de acción es 15 ppb (o .015 mg/L).
- El LNMC y nivel de acción para cobre es 1,300 ppb (or 1.3 mg/L).

Sobrepasar los niveles de acción de plomo o cobre provocará tratamiento de control u otros requisitos. Avisaremos a todos los usuarios de agua si nuestro sistema excede el nivel de acción de plomo.

Para más información, por favor contacte: _____
(dueño o operador)

a ( ) - o _____
(número de teléfono) (dirección)

El sistema de agua _____ le mandó este aviso en la fecha ___/___/___.

Como entra en el agua el plomo

La fuente de plomo en agua potable más frecuente son las líneas de distribución de agua o plomería residencial en vez de la fuente del sistema de agua. Fuentes de plomería incluyen tuberías de plomo, soldadura de plomo, grifos, válvulas, y otros componentes hechos de latón. Plomo de otras fuentes (tal como pintura a base de plomo y polvo o tierra contaminada) puede aumentar la exposición total de una persona, que se suma con los efectos del plomo en agua.

Efectos potenciales a la salud del plomo

El mayor riesgo de exposición a plomo es para bebés, niños, y mujeres embarazadas. Plomo puede causar problemas serios de salud si entra demasiado en el cuerpo. Los huesos almacenan plomo y eso puede descargar más adelante en la vida. Plomo puede dañar al cerebro y los riñones y causar interferencia con la producción de células rojas sanguinas que portan oxígeno, lo cual puede resultar en un QI disminuido en niños. Durante el embarazo, el niño recibe plomo de los huesos de la madre, que puede afectar al desarrollo cerebral. Niveles bajos de plomo pueden afectar a adultos con alta presión sanguina o con problemas de riñón.

Como entra en el agua el cobre

Cobre es un mineral y componente natural de sedimentos. En las cantidades correctas, es un nutriente esencial para humanos y plantas. En el estado de Washington, la mayoría del cobre en el agua potable viene de la corrosión de la plomería del hogar. Fuentes de plomería pueden incluir tuberías y accesorios. Cobre de la corrosión de plomería puede acumularse durante la noche.

Efectos potenciales a la salud del cobre

Aunque cobre es un mineral esencial en la dieta, demasiado cobre puede provocar problemas de salud. Cobre tiene una ancha distribución a través de los tejidos corporales, pero se acumula ante todo en el hígado y los riñones. Una sola dosis de 15 mg de cobre puede causar nausea, vómitos, diarrea, y calambres intestinales. Casos severos de intoxicación de cobre han resultado en anemia y a la disrupción del funcionamiento del hígado y riñón. Los individuos con las enfermedades de Wilson o Menke corren mayor riesgo de la exposición al cobre.

Como puede reducir exposición:

- Cuando el agua no ha corrido durante varias horas, enjuagar las tuberías dejando correr agua fría hasta que el agua se nota bastante más fría antes de usarla para beber o cocinar. **(Mientras más tiempo está el agua estancada en las tuberías, más disueltos estarán los metales que puede contener).**
- Use solo agua fría para beber, cocinar y preparar el biberón de fórmula para el bebé. Agua caliente puede contener altos niveles de plomo o cobre.
- Limpie las pantallas de filtro y los aireadores del grifo para quitar las partículas acumuladas.
- Si está construyendo o remodelando, solo use materiales "sin plomo" o con tubería de bajo plomo. Evite usar tuberías de cobre o accesorios de latón para lugares donde el agua se va a consumir o usar para preparar comida (como en la cocina o el grifo del baño).

BACTERIOLOGICAL ANALYSIS

(509) 662-1888
Fax: (509) 662-8183
3019 G. S. Center Road
Wenatchee, WA 98801

(509) 452-7707
Fax: (509) 452-7773
1008 W. Ahtanum Rd.
Union Gap, WA 98903

1-800-545-4206

Batch: 386529
Client: City of Zillah
Account: 04180
Sampler: Tim Tilley

-- Drinking Water Analytical Report -

Report Date: 9/18/13

City of Zillah
Dolly Meyer
PO Box 475
Zillah, WA 98953

Date Received: 9/17/13
Date Sampled: 9/17/13

Lab Number	Sample Id	Test Requested	Results
13-M022521	408 Edson St	Total Coliform Colilert	Negative
13-M022522	132 1st Ave	Total Coliform Colilert	Negative
13-M022523	503 1st Ave	Total Coliform Colilert	Negative

RECEIVED
SEP 19 2013
BY:

Bacteriological testing data for Dist. system
3 most current months
2013

Approved By Name: Denise Schmidt
Function: QC Assistant/Yakima

Signature: DSchmidt

Cascade Analytical uses procedures established by EPA, AOAC, APHA, ASTM, and FDA/BAM. Cascade Analytical makes no warranty of any kind the client assumes all risk and liability from the use of these results. Cascade Analytical, Inc.'s liability to the client as a result of use of Cascade's test results shall be limited to a sum equal to the fees paid by the client to Cascade Analytical, Inc. for analysis. PLEASE REVIEW YOUR DATA IN A TIMELY MANNER. DATA GAPS OR ERRORS AFTER THREE MONTHS WILL NOT BE OUR RESPONSIBILITY. THOUGH WE DO KEEP ALL ANALYTICAL DATA FOR SEVERAL YEARS, SAMPLES ARE DISPOSED OF AFTER SIX WEEKS.



(509) 662-1888
Fax: (509) 662-8183
3019 G. S. Center Road
Wenatchee, WA 98801

(509) 452-7707
Fax: (509) 452-7773
1008 W. Ahtanum Rd.
Union Gap, WA 98903

Batch: 384656
Client: City of Zillah
Account: 04180
Sampler: Tim Tilley

-- Drinking Water Analytical Report --

Report Date: 8/13/13

City of Zillah
Dolly Meyer
PO Box 475
Zillah, WA 98953

Date Received: 8/12/13
~~Date Sampled: 8/12/13~~

Lab Number	Sample Id	Test Requested	Results
13-M018470	408 Edson St	Total Coliform Colilert	Negative
13-M018471	132 1st Ave	Total Coliform Colilert	Negative
13-M018472	503 1st Ave	Total Coliform Colilert	Negative

Approved By Name: Andy Schut
Function: Lab Manager/Yakima

Signature: Andy Schut

Cascade Analytical uses procedures established by EPA, AOAC, APHA, ASTM, and FDA/BAM. Cascade Analytical makes no warranty of any kind the client assumes all risk and liability from the use of these results. Cascade Analytical, Inc.'s liability to the client as a result of use of Cascade's test results shall be limited to a sum equal to the fees paid by the client to Cascade Analytical, Inc. for analysis. PLEASE REVIEW YOUR DATA IN A TIMELY MANNER. DATA GAPS OR ERRORS AFTER THREE MONTHS WILL NOT BE OUR RESPONSIBILITY. THOUGH WE DO KEEP ALL ANALYTICAL DATA FOR SEVERAL YEARS, SAMPLES ARE DISPOSED OF AFTER SIX WEEKS.

CASCADE ANALYTICAL INC
1-800-545-4206

(509) 662-1888
Fax: (509) 662-8183
3019 G.S. Center Road
Wenatchee, WA 98801

(509) 452-7707
Fax: (509) 452-7773
1008 W. Ahtanum Rd.
Union Gap, WA 98903

Batch: 383788
Client: City of Zillah
Account: 04180
Sampler: Tim Tilley

-- Drinking Water Analytical Report --

Report Date: 7/23/13

City of Zillah
Dolly Meyer
PO Box 475
Zillah, WA 98953

RECEIVED
JUL 24 2013
BY:

Date Received: 7/22/13
Date Sampled: 7/22/13

Lab Number	Sample Id	Test Requested	Results
13-M016519	503 1st Ave	Total Coliform Colilert	Negative
13-M016520	408 Edson St	Total Coliform Colilert	Negative
13-M016521	132 1st Ave	Total Coliform Colilert	Negative

Approved By Name: Andy Schut
Function: Lab Manager/Yakima

Signature:

Cascade Analytical uses procedures established by EPA, AOAC, APHA, ASTM, and FDA/BAM. Cascade Analytical makes no warranty of any kind the client assumes all risk and liability from the use of these results. Cascade Analytical, Inc.'s liability to the client as a result of use of Cascade's test results shall be limited to a sum equal to the fees paid by the client to Cascade Analytical, Inc. for analysis. PLEASE REVIEW YOUR DATA IN A TIMELY MANNER. DATA GAPS OR ERRORS AFTER THREE MONTHS WILL NOT BE OUR RESPONSIBILITY. THOUGH WE DO KEEP ALL ANALYTICAL DATA FOR SEVERAL YEARS, SAMPLES ARE DISPOSED OF AFTER SIX WEEKS.

CASCADE ANALYTICAL
1-800-545-4206

(509) 662-1888
Fax: (509) 662-8183
3019 G.S. Center Road
Wenatchee, WA 98801

(509) 452-7707
Fax: (509) 452-7773
1008 W. Ahtanum Rd.
Union Gap, WA 98903

Batch: 381972
Client: City of Zillah
Account: 04180
Sampler: Tim Tilley

-- Drinking Water Analytical Report --

Report Date: 6/18/13

City of Zillah
Dolly Meyer
PO Box 475
Zillah, WA 98953

Date Received: 6/17/13
Date Sampled: 6/17/13

Lab Number	Sample Id	Test Requested	Results
13-M012777	132 1st Ave	Total Coliform Colilert	Negative
13-M012778	408 Edson St	Total Coliform Colilert	Negative
13-M012779	503 1st Ave	Total Coliform Colilert	Negative

RECEIVED
JUN 19 2013
BY:

Approved By Name: Andy Schut
Function: Lab Manager/Yakima

Signature:

Cascade Analytical uses procedures established by EPA, AOAC, APHA, ASTM, and FDA/BAM. Cascade Analytical makes no warranty of any kind the client assumes all risk and liability from the use of these results. Cascade Analytical, Inc.'s liability to the client as a result of use of Cascade's test results shall be limited to a sum equal to the fees paid by the client to Cascade Analytical, Inc. for analysis. PLEASE REVIEW YOUR DATA IN A TIMELY MANNER. DATA GAPS OR ERRORS AFTER THREE MONTHS WILL NOT BE OUR RESPONSIBILITY. THOUGH WE DO KEEP ALL ANALYTICAL DATA FOR SEVERAL YEARS, SAMPLES ARE DISPOSED OF AFTER SIX WEEKS.

COMPUTER PRINTOUT OF HYDRAULIC ANALYSIS RESULTS

Scenario: 2011 Peak Hour
Current Time Step: 0.000Hr
FlexTable: Pipe Table

Label	Length (Scaled) (ft)	Diameter (in)	Material	Hazen-Williams C	Flow (gpm)	Velocity (ft/s)	Status (Initial)
P-6	818	6.0	Ductile Iron	110.0	10.30	0.12	Open
P-9	155	8.0	Ductile Iron	120.0	6.57	0.04	Open
P-10	165	8.0	Ductile Iron	120.0	4.73	0.03	Open
P-11	281	8.0	Ductile Iron	120.0	2.60	0.02	Open
P-12	297	8.0	Ductile Iron	120.0	-0.02	0.00	Open
P-13	382	8.0	Ductile Iron	120.0	-2.12	0.01	Open
P-16	359	6.0	Ductile Iron	110.0	4.95	0.06	Open
P-17	131	8.0	Ductile Iron	120.0	-24.18	0.15	Open
P-18	298	8.0	Ductile Iron	120.0	95.45	0.61	Open
P-19	373	8.0	Ductile Iron	120.0	68.39	0.44	Open
P-20	781	8.0	Ductile Iron	120.0	23.48	0.15	Open
P-22	883	8.0	Ductile Iron	120.0	19.26	0.12	Open
P-23	335	8.0	Ductile Iron	120.0	16.82	0.11	Open
P-25	486	6.0	Ductile Iron	110.0	-18.09	0.21	Open
P-26	253	6.0	Ductile Iron	110.0	-19.40	0.22	Open
P-27	650	6.0	Ductile Iron	110.0	-13.18	0.15	Open
P-28	256	6.0	Ductile Iron	110.0	-15.55	0.18	Open
P-29	476	6.0	Ductile Iron	110.0	-17.86	0.20	Open
P-30	216	6.0	Ductile Iron	110.0	5.94	0.07	Open
P-31	224	6.0	Ductile Iron	110.0	31.29	0.36	Open
P-32	191	6.0	Ductile Iron	110.0	25.18	0.29	Open
P-33	281	6.0	Ductile Iron	110.0	31.74	0.36	Open
P-34	251	6.0	Ductile Iron	110.0	-11.06	0.13	Open
P-35	326	6.0	Ductile Iron	110.0	8.40	0.10	Open
P-36	190	6.0	Ductile Iron	110.0	-20.64	0.23	Open
P-37	370	6.0	Ductile Iron	110.0	-4.75	0.05	Open
P-38	231	6.0	Ductile Iron	110.0	-17.25	0.20	Open
P-39	424	6.0	Ductile Iron	110.0	-18.40	0.21	Open
P-40	224	6.0	Ductile Iron	110.0	-0.47	0.01	Open
P-41	200	8.0	Ductile Iron	120.0	-2.48	0.02	Open
P-44	230	8.0	Ductile Iron	120.0	321.47	2.05	Open
P-45	220	8.0	Ductile Iron	120.0	321.47	2.05	Open
P-47	418	8.0	Ductile Iron	120.0	149.78	0.96	Open
P-48	306	4.0	Ductile Iron	110.0	0.00	0.00	Open
P-49	207	8.0	Ductile Iron	120.0	155.77	0.99	Open
P-50	429	6.0	Ductile Iron	110.0	70.63	0.80	Open
P-51	302	8.0	Ductile Iron	120.0	83.25	0.53	Open
P-52	209	8.0	Ductile Iron	120.0	55.78	0.36	Open
P-53	373	8.0	Ductile Iron	120.0	54.47	0.35	Open
P-54	370	8.0	Ductile Iron	120.0	53.42	0.34	Open
P-55	137	8.0	Ductile Iron	120.0	50.89	0.32	Open
P-56	164	6.0	Ductile Iron	110.0	-1.31	0.01	Open
P-57	311	8.0	Ductile Iron	120.0	26.68	0.17	Open
P-58	341	6.0	Ductile Iron	110.0	-94.21	1.07	Open
P-59	350	8.0	Ductile Iron	120.0	-328.53	2.10	Open
P-60	391	8.0	Ductile Iron	120.0	229.81	1.47	Open
P-61	351	8.0	Ductile Iron	120.0	-16.71	0.11	Open
P-62	209	8.0	Ductile Iron	120.0	-57.85	0.37	Open
P-63	484	8.0	Ductile Iron	120.0	17.20	0.11	Open
P-64	288	6.0	Ductile Iron	110.0	15.36	0.17	Open
P-65	460	8.0	Ductile Iron	120.0	76.55	0.49	Open
P-66	335	8.0	Ductile Iron	120.0	58.77	0.38	Open
P-67	249	8.0	Ductile Iron	120.0	16.56	0.11	Open
P-68	311	8.0	Ductile Iron	120.0	14.98	0.10	Open
P-69	423	8.0	Ductile Iron	120.0	18.21	0.12	Open
P-70	158	8.0	Ductile Iron	120.0	16.27	0.10	Open

P-72	1,296	6.0	Ductile Iron	110.0	-34.94	0.40	Open
P-77	283	6.0	Ductile Iron	110.0	-122.06	1.39	Open
P-78	436	6.0	Ductile Iron	110.0	59.28	0.67	Open
P-79	331	6.0	Ductile Iron	110.0	59.28	0.67	Open
P-81	426	8.0	Ductile Iron	120.0	123.41	0.79	Open
P-82	748	8.0	Ductile Iron	120.0	118.46	0.76	Open
P-83	354	8.0	Ductile Iron	120.0	109.87	0.70	Open
P-87	357	8.0	Ductile Iron	120.0	10.10	0.06	Open
P-88	278	8.0	Ductile Iron	120.0	3.78	0.02	Open
P-90	360	8.0	Ductile Iron	120.0	1.58	0.01	Open
P-96	247	6.0	Ductile Iron	110.0	5.54	0.06	Open
P-97	395	6.0	Ductile Iron	110.0	3.17	0.04	Open
P-98	497	6.0	Ductile Iron	110.0	-1.03	0.01	Open
P-99	240	6.0	Ductile Iron	110.0	-3.13	0.04	Open
P-100	213	6.0	Ductile Iron	110.0	-3.13	0.04	Open
P-101	217	6.0	Ductile Iron	110.0	-26.25	0.30	Open
P-102	275	6.0	Ductile Iron	110.0	-10.89	0.12	Open
P-103	113	6.0	Ductile Iron	110.0	40.00	0.45	Open
P-104	224	6.0	Ductile Iron	110.0	23.11	0.26	Open
P-105	64	6.0	Ductile Iron	110.0	36.78	0.42	Open
P-106	394	6.0	Ductile Iron	110.0	-12.93	0.15	Open
P-107	414	8.0	Ductile Iron	120.0	48.02	0.31	Open
P-108	242	6.0	Ductile Iron	110.0	22.02	0.25	Open
P-109	279	6.0	Ductile Iron	110.0	20.97	0.24	Open
P-110	311	6.0	Ductile Iron	110.0	18.86	0.21	Open
P-111	240	6.0	Ductile Iron	110.0	41.62	0.47	Open
P-112	51	6.0	Ductile Iron	110.0	100.73	1.14	Open
P-114	346	6.0	Ductile Iron	110.0	-0.18	0.00	Open
P-115	296	6.0	Ductile Iron	110.0	5.25	0.06	Open
P-116	396	6.0	Ductile Iron	110.0	5.25	0.06	Open
P-117	247	6.0	Ductile Iron	110.0	5.25	0.06	Open
P-118	321	6.0	Ductile Iron	110.0	2.36	0.03	Open
P-122	291	8.0	Ductile Iron	120.0	78.79	0.50	Open
P-123	345	8.0	Ductile Iron	120.0	23.81	0.15	Open
P-124	86	8.0	Ductile Iron	120.0	54.98	0.35	Open
P-125	275	8.0	Ductile Iron	120.0	60.68	0.39	Open
P-126	284	8.0	Ductile Iron	120.0	60.68	0.39	Open
P-127	428	8.0	Ductile Iron	120.0	-7.02	0.04	Open
P-128	472	8.0	Ductile Iron	120.0	-53.57	0.34	Open
P-129	501	8.0	Ductile Iron	120.0	-2.02	0.01	Open
P-130	146	8.0	Ductile Iron	120.0	-57.86	0.37	Open
P-131	82	8.0	Ductile Iron	120.0	239.71	1.53	Open
P-132	82	8.0	Ductile Iron	120.0	231.33	1.48	Open
P-133	227	8.0	Ductile Iron	120.0	185.50	1.18	Open
P-134	184	8.0	Ductile Iron	120.0	184.45	1.18	Open
P-135	90	8.0	Ductile Iron	120.0	400.00	2.55	Open
P-136	78	8.0	Ductile Iron	120.0	430.48	2.75	Open
P-137	328	8.0	Ductile Iron	120.0	-30.48	0.19	Open
P-138	234	6.0	Ductile Iron	110.0	18.30	0.21	Open
P-139	211	6.0	Ductile Iron	110.0	17.51	0.20	Open
P-140	214	6.0	Ductile Iron	110.0	17.51	0.20	Open
P-141	190	6.0	Ductile Iron	110.0	16.20	0.18	Open
P-142	231	6.0	Ductile Iron	110.0	-44.25	0.50	Open
P-143	380	6.0	Ductile Iron	110.0	59.13	0.67	Open
P-144	270	6.0	Ductile Iron	110.0	20.35	0.23	Open
P-145	789	6.0	Ductile Iron	110.0	-12.50	0.14	Open
P-152	258	8.0	Ductile Iron	120.0	-86.05	0.55	Open
P-153	356	8.0	Ductile Iron	120.0	-96.46	0.62	Open
P-154	360	8.0	Ductile Iron	120.0	-13.45	0.09	Open
P-155	306	6.0	Ductile Iron	110.0	-4.73	0.05	Open
P-156	128	8.0	Ductile Iron	120.0	-550.00	3.51	Open
P-157	232	8.0	Ductile Iron	120.0	252.43	1.61	Open
P-158	368	8.0	Ductile Iron	120.0	104.22	0.67	Open
P-159	326	8.0	Ductile Iron	120.0	97.86	0.62	Open
P-160	28	8.0	Ductile Iron	120.0	147.94	0.94	Open
P-162	318	8.0	Ductile Iron	120.0	146.37	0.93	Open
P-163	257	8.0	Ductile Iron	120.0	235.36	1.50	Open

	307	8.0	Ductile Iron	120.0	149.09	0.95	Open
P-165	372	8.0	Ductile Iron	120.0	82.06	0.52	Open
P-166	304	4.0	Ductile Iron	110.0	-25.47	0.65	Open
P-167	380	8.0	Ductile Iron	120.0	-40.39	0.26	Open
P-170	797	8.0	Ductile Iron	120.0	7.96	0.05	Open
P-171	215	8.0	Ductile Iron	120.0	140.21	0.89	Open
P-172	560	8.0	Ductile Iron	120.0	137.58	0.88	Open
P-173	215	8.0	Ductile Iron	120.0	113.28	0.72	Open
P-174	162	8.0	Ductile Iron	120.0	-36.07	0.23	Open
P-175	837	6.0	Ductile Iron	110.0	-32.20	0.37	Open
P-176	525	6.0	Ductile Iron	110.0	1.58	0.02	Open
P-177	371	6.0	Ductile Iron	110.0	-35.88	0.41	Open
P-178	487	6.0	Ductile Iron	110.0	-28.14	0.32	Open
P-179	525	6.0	Ductile Iron	110.0	8.14	0.09	Open
P-182	291	6.0	Ductile Iron	110.0	3.15	0.04	Open
P-183	261	6.0	Ductile Iron	110.0	1.84	0.02	Open
P-184	185	8.0	Ductile Iron	120.0	-4.93	0.03	Open
P-185	91	10.0	Ductile Iron	120.0	-149.39	0.61	Open
P-186	497	10.0	Ductile Iron	120.0	-149.39	0.61	Open
P-187	381	10.0	Ductile Iron	120.0	-149.39	0.61	Open
P-188	441	12.0	Ductile Iron	120.0	-188.64	0.54	Open
P-190	643	12.0	Ductile Iron	120.0	187.33	0.53	Open
P-191	416	12.0	Ductile Iron	120.0	184.77	0.52	Open
P-192	587	12.0	Ductile Iron	120.0	41.61	0.12	Open
P-193	64	6.0	Ductile Iron	110.0	41.61	0.47	Open
P-194	609	6.0	Ductile Iron	110.0	41.61	0.47	Open
P-195	70	6.0	Ductile Iron	110.0	-143.16	1.62	Open
P-197	303	4.0	Ductile Iron	110.0	1.05	0.03	Open
P-199	230	8.0	Ductile Iron	120.0	121.93	0.78	Open
P-201	157	8.0	Ductile Iron	120.0	120.61	0.77	Open
P-202	484	8.0	Ductile Iron	120.0	146.02	0.93	Open
P-203	130	8.0	Ductile Iron	120.0	278.61	1.78	Open
P-204	381	8.0	Ductile Iron	120.0	133.64	0.85	Open
P-205	751	4.0	Ductile Iron	110.0	-5.86	0.15	Open
P-206	313	6.0	Ductile Iron	110.0	-26.20	0.30	Open
P-207	354	6.0	Ductile Iron	110.0	25.70	0.29	Open
P-208	341	6.0	Ductile Iron	110.0	-18.73	0.21	Open
P-209	297	6.0	Ductile Iron	110.0	42.85	0.49	Open
P-210	522	6.0	Ductile Iron	110.0	-27.00	0.31	Open
P-211	148	6.0	Ductile Iron	110.0	68.27	0.77	Open
P-212	505	6.0	Ductile Iron	110.0	-45.82	0.52	Open
P-213	176	6.0	Ductile Iron	110.0	113.04	1.28	Open
P-214	69	6.0	Ductile Iron	110.0	107.18	1.22	Open
P-215	234	8.0	Ductile Iron	120.0	67.03	0.43	Open
P-216	507	8.0	Ductile Iron	120.0	2.48	0.02	Open
P-218	478	8.0	Ductile Iron	120.0	40.14	0.26	Open
P-220	155	6.0	Ductile Iron	110.0	0.00	0.00	Open
P-222	255	8.0	Ductile Iron	120.0	-65.08	0.42	Open
P-223	398	8.0	Ductile Iron	120.0	-65.08	0.42	Open
P-224	384	8.0	Ductile Iron	120.0	64.56	0.41	Open
P-226	670	6.0	Ductile Iron	110.0	37.05	0.42	Open
P-227	231	6.0	Ductile Iron	110.0	-3.73	0.04	Open
P-228	415	10.0	Ductile Iron	120.0	-78.32	0.32	Open
P-229	737	6.0	Ductile Iron	110.0	38.31	0.43	Open
P-230	277	6.0	Ductile Iron	110.0	30.90	0.35	Open
P-231	288	6.0	Ductile Iron	110.0	1.80	0.02	Open
P-232	297	6.0	Ductile Iron	110.0	-46.38	0.53	Open
P-233	933	6.0	Ductile Iron	110.0	-26.32	0.30	Open
P-234	272	6.0	Ductile Iron	110.0	-28.73	0.33	Open
P-235	192	6.0	Ductile Iron	110.0	-19.50	0.22	Open
P-236	312	10.0	Ductile Iron	120.0	118.73	0.49	Open
P-237	333	10.0	Ductile Iron	120.0	-140.33	0.57	Open
P-239	244	6.0	Ductile Iron	110.0	41.78	0.47	Open
P-240	407	6.0	Ductile Iron	110.0	9.23	0.10	Open
P-241	272	6.0	Ductile Iron	110.0	31.50	0.36	Open
P-242	415	6.0	Ductile Iron	110.0	-1.09	0.01	Open
P-243	314	6.0	Ductile Iron	110.0	31.54	0.36	Open

	193	6.0	Ductile Iron	110.0	15.18	0.17	Open
P-245	625	6.0	Ductile Iron	110.0	13.60	0.15	Open
P-246	480	6.0	Ductile Iron	110.0	14.08	0.16	Open
P-248	378	6.0	Ductile Iron	110.0	13.03	0.15	Open
P-249	308	6.0	Ductile Iron	110.0	22.95	0.26	Open
P-253	222	6.0	Ductile Iron	110.0	14.35	0.16	Open
P-254	394	6.0	Ductile Iron	110.0	40.74	0.46	Open
P-255	363	8.0	Ductile Iron	120.0	0.00	0.00	Open
P-256	319	6.0	Ductile Iron	110.0	6.92	0.08	Open
P-257	407	6.0	Ductile Iron	110.0	-0.50	0.01	Open
P-258	381	8.0	Ductile Iron	120.0	-16.78	0.11	Open
P-259	337	8.0	Ductile Iron	120.0	-19.26	0.12	Open
P-260	577	6.0	Ductile Iron	110.0	-6.92	0.08	Open
P-261	217	8.0	Ductile Iron	120.0	23.48	0.15	Open
P-262	293	8.0	Ductile Iron	120.0	14.85	0.09	Open
P-263	231	8.0	Ductile Iron	120.0	14.85	0.09	Open
P-264	264	8.0	Ductile Iron	120.0	9.90	0.06	Open
P-265	505	8.0	Ductile Iron	120.0	9.90	0.06	Open
P-266	519	8.0	Ductile Iron	120.0	8.63	0.06	Open
P-267	1,780	10.0	Ductile Iron	120.0	-64.56	0.26	Open
P-268	220	10.0	Ductile Iron	120.0	-64.56	0.26	Open
P-270	120	10.0	Ductile Iron	120.0	2.63	0.01	Open
P-271	230	6.0	Ductile Iron	110.0	-2.63	0.03	Open
P-272	1,307	10.0	Ductile Iron	120.0	-60.21	0.25	Open
P-273	708	10.0	Ductile Iron	120.0	-64.01	0.26	Open
P-274	990	8.0	Ductile Iron	120.0	3.26	0.02	Open
P-275	167	10.0	Ductile Iron	120.0	-65.85	0.27	Open
P-276	410	8.0	Ductile Iron	120.0	1.84	0.01	Open
P-277	580	8.0	Ductile Iron	120.0	1.05	0.01	Open
P-278	27	8.0	Ductile Iron	120.0	-119.62	0.76	Open
P-280	252	10.0	Ductile Iron	120.0	78.15	0.32	Open
P-282	656	10.0	Ductile Iron	120.0	97.01	0.40	Open
P-284	23	8.0	Ductile Iron	120.0	-18.86	0.12	Open
P-285	121	8.0	Ductile Iron	120.0	-19.23	0.12	Open
P-286	790	2.0	Ductile Iron	110.0	0.95	0.10	Open
P-288	123	8.0	Ductile Iron	120.0	-0.10	0.00	Open
P-295	227	6.0	Ductile Iron	110.0	-16.93	0.19	Open
P-296	385	6.0	Ductile Iron	110.0	-22.97	0.26	Open
P-297	259	6.0	Ductile Iron	110.0	-24.81	0.28	Open
P-298	192	6.0	Ductile Iron	110.0	1.31	0.01	Open
P-299	152	6.0	Ductile Iron	110.0	-26.65	0.30	Open
P-300	140	6.0	Ductile Iron	110.0	3.68	0.04	Open
P-301	355	6.0	Ductile Iron	110.0	2.10	0.02	Open
P-304	332	8.0	Ductile Iron	120.0	1.58	0.01	Open
P-305	424	8.0	Ductile Iron	120.0	1.05	0.01	Open
P-309	100	6.0	Ductile Iron	110.0	4.47	0.05	Open
P-310	128	6.0	Ductile Iron	110.0	0.79	0.01	Open
P-313	143	6.0	Ductile Iron	110.0	1.31	0.01	Open
P-314	158	8.0	Ductile Iron	120.0	0.00	0.00	Open
P-317	411	8.0	Ductile Iron	120.0	143.68	0.92	Open
P-318	150	8.0	Ductile Iron	120.0	140.26	0.90	Open
P-319	204	4.0	Ductile Iron	110.0	-2.36	0.06	Open
P-320	257	8.0	Ductile Iron	120.0	146.99	0.94	Open
P-323	174	8.0	Ductile Iron	120.0	0.53	0.00	Open
P-324	341	8.0	Ductile Iron	120.0	-24.41	0.16	Open
P-325	490	6.0	Ductile Iron	110.0	0.00	0.00	Open
P-327	44	8.0	Ductile Iron	120.0	-283.16	1.81	Open
P-350	70	12.0	Ductile Iron	120.0	4.60	0.01	Open
P-372	337	8.0	Ductile Iron	120.0	-198.03	1.26	Open
P-373	313	8.0	Ductile Iron	120.0	-198.30	1.27	Open
P-376	550	8.0	Ductile Iron	120.0	49.58	0.32	Open
P-377	78	8.0	Ductile Iron	120.0	650.00	4.15	Open
P-378	375	12.0	Ductile Iron	120.0	-44.15	0.13	Open
P-379	110	12.0	Ductile Iron	120.0	5.44	0.02	Open
P-383	1,778	12.0	Ductile Iron	120.0	16.28	0.05	Open
P-387	2,282	12.0	Ductile Iron	120.0	9.83	0.03	Open
P-395	508	8.0	Ductile Iron	120.0	2.45	0.02	Open

	1,724	12.0	Ductile Iron	120.0	9.83	0.03	Open
P-397	1,521	8.0	Ductile Iron	120.0	-2.45	0.02	Open
P-398	559	8.0	Ductile Iron	120.0	-2.45	0.02	Open
P-399	580	12.0	Ductile Iron	120.0	-9.83	0.03	Open
P-400	1,232	12.0	Ductile Iron	120.0	-9.83	0.03	Open
P-404	92	12.0	Ductile Iron	120.0	0.00	0.00	Open
P-405	151	12.0	Ductile Iron	120.0	0.00	0.00	Open
P-409	325	10.0	Ductile Iron	120.0	16.76	0.07	Open
P-410	335	10.0	Ductile Iron	120.0	-38.91	0.16	Open
P-411	285	6.0	Ductile Iron	110.0	53.39	0.61	Open
P-412	427	8.0	Ductile Iron	120.0	-16.44	0.10	Open
P-413	1,247	6.0	Ductile Iron	110.0	33.80	0.38	Open
P-414	219	6.0	Ductile Iron	110.0	4.99	0.06	Open
P-415	318	6.0	Ductile Iron	130.0	-1.58	0.02	Open
P-416	406	6.0	Ductile Iron	110.0	-61.47	0.70	Open
P-418	184	12.0	Ductile Iron	120.0	(N/A)	(N/A)	Open
P-419	1,219	8.0	Ductile Iron	120.0	(N/A)	(N/A)	Open
P-420	851	8.0	Ductile Iron	120.0	(N/A)	(N/A)	Open
P-421	251	6.0	Ductile Iron	110.0	-15.08	0.17	Open
P-422	255	6.0	Ductile Iron	110.0	-29.90	0.34	Open
P-423	639	8.0	Ductile Iron	120.0	13.24	0.08	Open
P-424	245	8.0	Ductile Iron	120.0	13.24	0.08	Open
P-425	639	8.0	Ductile Iron	120.0	13.24	0.08	Open
P-428	331	10.0	Ductile Iron	120.0	-68.74	0.28	Open
P-429	105	10.0	Ductile Iron	120.0	-89.39	0.37	Open
P-430	774	6.0	Ductile Iron	110.0	-19.94	0.23	Open
P-431	368	6.0	Ductile Iron	110.0	0.53	0.01	Open
P-432	151	8.0	Ductile Iron	120.0	(N/A)	(N/A)	Open
P-436	282	6.0	Ductile Iron	110.0	2.10	0.02	Open
P-437	282	6.0	Ductile Iron	110.0	1.58	0.02	Open
P-440	193	8.0	Ductile Iron	120.0	(N/A)	(N/A)	Closed
P-441	413	8.0	Ductile Iron	120.0	(N/A)	(N/A)	Closed
P-442	504	6.0	Ductile Iron	110.0	49.58	0.56	Open
P-443	300	6.0	Ductile Iron	110.0	-27.70	0.31	Open
P-444	242	6.0	Ductile Iron	110.0	-28.06	0.32	Open
P-445	239	8.0	Ductile Iron	120.0	0.36	0.00	Open
P-447	60	12.0	Ductile Iron	120.0	5.44	0.02	Open
P-449	715	6.0	Ductile Iron	130.0	1.31	0.01	Open
P-450	290	10.0	Ductile Iron	130.0	0.79	0.00	Open
P-451	276	8.0	Ductile Iron	120.0	-129.64	0.83	Open
P-452	118	8.0	Ductile Iron	120.0	-258.75	1.65	Open
P-453	800	6.0	Ductile Iron	130.0	64.56	0.73	Open
P-456	339	6.0	Ductile Iron	130.0	0.00	0.00	Open
P-458	520	12.0	Ductile Iron	120.0	1.86	0.01	Open
P-459	727	12.0	Ductile Iron	120.0	7.38	0.02	Open
P-460	383	12.0	Ductile Iron	120.0	4.49	0.01	Open
P-461	425	12.0	Ductile Iron	120.0	0.00	0.00	Open
P-462	325	12.0	Ductile Iron	120.0	0.00	0.00	Open
P-463	289	6.0	Ductile Iron	130.0	2.63	0.03	Open
P-464	429	6.0	Ductile Iron	130.0	1.58	0.02	Open
P-465	456	6.0	Ductile Iron	130.0	0.00	0.00	Open
P-466	165	12.0	Ductile Iron	120.0	-4.60	0.01	Open
P-467	1,345	12.0	Ductile Iron	120.0	-4.61	0.01	Open
P-468	156	12.0	Ductile Iron	130.0	0.00	0.00	Open
P-469	155	8.0	Ductile Iron	120.0	158.19	1.01	Open
P-470	280	8.0	Ductile Iron	120.0	158.19	1.01	Open
P-471	113	8.0	Ductile Iron	130.0	(N/A)	(N/A)	Open
P-472	119	12.0	Ductile Iron	130.0	0.00	0.00	Closed
P-473	266	12.0	Ductile Iron	130.0	-34.88	0.10	Open
P-474	285	12.0	Ductile Iron	130.0	-34.88	0.10	Open
P-475	370	12.0	Ductile Iron	130.0	-34.88	0.10	Open
P-476	213	6.0	Ductile Iron	110.0	10.30	0.12	Open
P-477	677	6.0	Ductile Iron	110.0	-24.58	0.28	Open
P-478	143	12.0	Ductile Iron	130.0	-34.88	0.10	Open
P-479	349	8.0	Ductile Iron	130.0	0.00	0.00	Open
P-480	1,012	10.0	Ductile Iron	130.0	0.00	0.00	Open
P-481	471	6.0	Ductile Iron	130.0	(N/A)	(N/A)	Open

	199	6.0	Ductile Iron	130.0	(N/A)	(N/A)	Open
P-483	60	12.0	Ductile Iron	120.0	5.44	0.02	Open
P-484	305	12.0	Ductile Iron	120.0	5.44	0.02	Open
P-486	61	6.0	Ductile Iron	130.0	(N/A)	(N/A)	Open
P-488	150	10.0	Ductile Iron	130.0	0.00	0.00	Open
P-489	70	6.0	Ductile Iron	130.0	(N/A)	(N/A)	Open
P-490	54	6.0	Ductile Iron	130.0	(N/A)	(N/A)	Open
P-491	52	6.0	Ductile Iron	130.0	(N/A)	(N/A)	Open
P-492	45	6.0	Ductile Iron	130.0	(N/A)	(N/A)	Open
P-493	44	6.0	Ductile Iron	130.0	(N/A)	(N/A)	Open
P-494	46	6.0	Ductile Iron	130.0	(N/A)	(N/A)	Open
P-495	60	6.0	Ductile Iron	130.0	(N/A)	(N/A)	Open
P-496	181	6.0	Ductile Iron	130.0	(N/A)	(N/A)	Open
P-497	48	6.0	Ductile Iron	130.0	(N/A)	(N/A)	Open
P-498	445	12.0	Ductile Iron	120.0	-15.18	0.04	Open
P-499	397	8.0	Ductile Iron	120.0	-15.18	0.10	Open

R:\Hydraulic Analysis\Zillah\13033\13033 Zillah Hydraulic Analysis.wtg

Scenario: 2011 Peak Hour
Current Time Step: 0.000Hr
FlexTable: Junction Table

Label	Elevation (ft)	Zone	Demand (gpm)	Hydraulic Grade (ft)	Pressure (psi)	Is Active?
J-1	855.0	Zone-1	-550.00	971.5	50.4	True
J-2	865.0	Zone-1	-400.00	970.7	45.7	True
J-3	818.0	Zone-1	-650.00	972.9	67.0	True
J-4	842.0	Zone-1	64.56	969.4	55.1	True
J-5	820.5	Zone-1	0.26	969.5	64.5	True
J-6	820.0	Zone-1	2.63	969.6	64.7	True
J-7	818.0	Zone-1	0.26	969.6	65.6	True
J-8	810.0	Zone-1	10.17	969.6	69.0	True
J-10	816.0	Zone-1	1.05	969.6	66.5	True
J-11	819.0	Zone-1	0.00	969.6	65.2	True
J-12	820.0	Zone-1	2.10	969.6	64.7	True
J-13	810.0	Zone-1	0.00	969.6	69.0	True
J-14	810.0	Zone-1	4.95	969.7	69.1	True
J-15	819.0	Zone-1	0.00	969.7	65.2	True
J-16	819.0	Zone-1	0.00	969.7	65.2	True
J-17	824.0	Zone-1	1.31	970.4	63.4	True
J-18	824.0	Zone-1	4.85	970.4	63.4	True
J-19	838.0	Zone-1	2.36	970.5	57.3	True
J-20	841.0	Zone-1	1.17	970.5	56.0	True
J-21	841.0	Zone-1	1.36	970.5	56.0	True
J-22	842.0	Zone-1	1.63	970.5	55.6	True
J-23	845.0	Zone-1	1.84	970.5	54.3	True
J-24	834.0	Zone-1	1.31	970.4	59.0	True
J-25	835.0	Zone-1	1.84	970.4	58.6	True
J-26	832.0	Zone-1	1.36	970.5	59.9	True
J-27	835.0	Zone-1	26.87	970.5	58.6	True
J-28	835.0	Zone-1	3.90	970.5	58.6	True
J-29	852.0	Zone-1	0.00	970.6	51.3	True
J-37	872.0	Zone-1	1.58	970.6	42.7	True
J-38	870.0	Zone-1	0.79	970.6	43.5	True
J-39	857.0	Zone-1	0.79	970.6	49.2	True
J-40	860.0	Zone-1	2.36	970.6	47.9	True
J-41	862.0	Zone-1	4.20	970.6	47.0	True
J-42	860.0	Zone-1	2.10	970.6	47.9	True
J-43	840.0	Zone-1	0.00	970.6	56.5	True
J-44	845.0	Zone-1	0.00	970.6	54.4	True
J-45	816.0	Zone-1	2.48	969.6	66.5	True
J-46	764.5	Zone-1	0.00	969.5	88.7	True
J-47	776.0	Zone-1	7.43	969.5	83.7	True
J-48	764.5	Zone-1	2.48	969.5	88.7	True
J-49	780.0	Zone-1	0.00	969.6	82.0	True
J-50	809.0	Zone-1	79.85	969.6	69.5	True
J-51	822.0	Zone-1	2.48	970.7	64.3	True
J-53	819.0	Zone-1	5.93	970.7	65.6	True
J-54	819.0	Zone-1	0.00	970.4	65.5	True
J-55	817.0	Zone-1	7.51	971.0	66.6	True
J-56	818.0	Zone-1	1.89	970.8	66.1	True
J-57	819.0	Zone-1	0.79	970.8	65.7	True
J-58	820.0	Zone-1	1.31	970.7	65.2	True
J-59	830.0	Zone-1	1.05	970.7	60.9	True
J-60	845.0	Zone-1	1.58	970.7	54.4	True
J-61	850.0	Zone-1	0.00	970.7	52.2	True
J-62	821.0	Zone-1	0.00	971.5	65.1	True
J-63	823.0	Zone-1	1.31	970.8	63.9	True
J-64	824.0	Zone-1	2.29	970.8	63.5	True
J-65	826.0	Zone-1	1.51	970.7	62.6	True
J-66	850.0	Zone-1	1.84	970.7	52.2	True

J-67	858.0	Zone-1	0.00	970.7	48.7	True
J-68	815.0	Zone-1	0.00	972.1	68.0	True
J-69	817.0	Zone-1	4.51	971.2	66.7	True
J-70	826.0	Zone-1	23.10	970.7	62.6	True
J-71	803.0	Zone-1	26.53	969.8	72.2	True
J-75	808.0	Zone-1	1.31	970.1	70.1	True
J-76	817.0	Zone-1	1.05	970.6	66.5	True
J-77	822.0	Zone-1	24.00	970.6	64.3	True
J-78	828.0	Zone-1	1.58	970.6	61.7	True
J-79	840.0	Zone-1	1.31	970.6	56.5	True
J-80	830.0	Zone-1	1.70	970.6	60.8	True
J-81	833.0	Zone-1	1.31	970.6	59.5	True
J-82	827.0	Zone-1	1.94	970.6	62.1	True
J-84	808.0	Zone-1	0.00	969.8	70.0	True
J-85	809.0	Zone-1	74.46	969.7	69.5	True
J-86	861.0	Zone-1	6.31	970.6	47.4	True
J-87	838.0	Zone-1	0.79	970.6	57.4	True
J-88	850.0	Zone-1	1.05	970.5	52.2	True
J-89	865.0	Zone-1	2.10	970.5	45.7	True
J-90	860.0	Zone-1	1.05	970.5	47.8	True
J-91	850.0	Zone-1	0.00	970.5	52.1	True
J-92	855.0	Zone-1	1.31	970.5	50.0	True
J-93	863.0	Zone-1	0.00	970.5	46.5	True
J-94	863.0	Zone-1	0.00	970.3	46.4	True
J-95	870.0	Zone-1	1.58	970.4	43.5	True
J-96	870.0	Zone-1	2.36	970.4	43.4	True
J-97	892.0	Zone-2	0.18	1,010.9	51.5	True
J-98	897.0	Zone-2	0.00	1,010.9	49.3	True
J-99	895.0	Zone-2	0.00	1,010.9	50.2	True
J-100	900.5	Zone-2	0.00	1,010.9	47.8	True
J-101	901.0	Zone-2	0.79	1,010.9	47.6	True
J-102	901.0	Zone-2	2.36	1,010.9	47.6	True
J-105	890.0	Zone-2	1.58	1,010.9	52.3	True
J-106	859.0	Zone-1	0.79	970.3	48.2	True
J-107	860.0	Zone-1	3.94	970.1	47.6	True
J-108	825.0	Zone-1	4.71	970.1	62.8	True
J-109	860.0	Zone-1	0.00	970.3	47.7	True
J-110	860.5	Zone-1	1.31	970.3	47.5	True
J-111	855.0	Zone-1	1.31	970.3	49.9	True
J-112	862.0	Zone-1	1.05	970.2	46.8	True
J-113	861.0	Zone-1	0.00	970.6	47.4	True
J-114	861.0	Zone-1	1.36	970.5	47.4	True
J-115	861.0	Zone-1	1.58	970.4	47.3	True
J-116	835.0	Zone-1	4.99	970.1	58.5	True
J-117	818.0	Zone-1	1.05	970.0	65.8	True
J-118	832.0	Zone-1	1.58	970.0	59.7	True
J-120	850.0	Zone-1	1.31	970.0	51.9	True
J-121	861.0	Zone-1	0.00	970.0	47.2	True
J-122	845.0	Zone-1	1.05	970.0	54.1	True
J-123	826.0	Zone-1	7.43	970.0	62.3	True
J-124	850.0	Zone-1	0.26	970.2	52.0	True
J-125	838.0	Zone-1	6.36	970.1	57.2	True
J-126	821.0	Zone-1	14.85	970.0	64.5	True
J-127	815.0	Zone-1	30.71	969.7	66.9	True
J-128	804.0	Zone-1	67.03	969.5	71.6	True
J-129	800.0	Zone-1	107.53	969.4	73.3	True
J-130	792.0	Zone-1	6.95	969.6	76.9	True
J-133	817.0	Zone-1	4.73	969.9	66.2	True
J-134	822.0	Zone-1	5.68	969.9	64.0	True
J-135	826.0	Zone-1	6.57	969.9	62.2	True
J-141	810.0	Zone-1	14.74	969.6	69.1	True
J-142	814.0	Zone-1	2.36	969.8	67.4	True
J-143	816.0	Zone-1	1.05	969.8	66.5	True
J-144	818.0	Zone-1	2.10	969.9	65.7	True
J-145	859.0	Zone-1	1.58	969.9	48.0	True
J-146	820.0	Zone-1	0.79	969.8	64.8	True
J-147	819.0	Zone-1	0.00	969.8	65.3	True

	850.0	Zone-1	0.00	969.9	51.9	True
J-149	813.0	Zone-1	2.63	969.5	67.7	True
J-150	812.0	Zone-1	3.94	969.2	68.0	True
J-151	805.0	Zone-1	0.00	968.7	70.8	True
J-152	808.0	Zone-1	0.00	968.7	69.5	True
J-153	799.0	Zone-1	64.56	968.2	73.2	True
J-154	787.0	Zone-1	0.00	968.3	78.4	True
J-155	785.0	Zone-1	0.00	968.3	79.3	True
J-156	782.0	Zone-1	64.56	968.3	80.6	True
J-157	799.0	Zone-1	64.56	968.7	73.4	True
J-158	801.0	Zone-1	1.31	968.8	72.6	True
J-159	802.0	Zone-1	0.00	968.8	72.2	True
J-160	807.0	Zone-1	1.05	969.0	70.1	True
J-161	830.0	Zone-1	0.79	969.3	60.3	True
J-162	835.0	Zone-1	1.31	969.4	58.1	True
J-164	847.0	Zone-1	1.58	969.5	53.0	True
J-165	845.0	Zone-1	2.36	969.5	53.9	True
J-166	825.0	Zone-1	1.50	969.3	62.5	True
J-167	817.0	Zone-1	1.58	969.3	65.9	True
J-168	815.0	Zone-1	1.58	969.2	66.7	True
J-169	810.0	Zone-1	1.05	969.1	68.8	True
J-170	800.0	Zone-1	0.00	968.7	73.0	True
J-171	802.0	Zone-1	64.56	968.7	72.1	True
J-172	800.0	Zone-1	2.48	968.7	73.0	True
J-173	805.0	Zone-1	0.00	968.7	70.8	True
J-174	830.0	Zone-1	22.05	969.3	60.3	True
J-175	843.0	Zone-1	3.68	969.3	54.7	True
J-176	835.0	Zone-1	2.10	969.3	58.1	True
J-177	820.0	Zone-1	2.36	969.3	64.6	True
J-178	822.0	Zone-1	2.89	969.4	63.8	True
J-179	851.0	Zone-1	1.31	969.5	51.3	True
J-180	819.0	Zone-1	3.68	969.4	65.1	True
J-181	819.0	Zone-1	1.05	969.4	65.1	True
J-183	841.0	Zone-1	1.58	969.4	55.6	True
J-184	837.0	Zone-1	2.28	969.4	57.3	True
J-185	857.0	Zone-1	1.05	969.5	48.7	True
J-186	860.0	Zone-1	2.10	969.5	47.4	True
J-187	862.0	Zone-1	2.10	969.5	46.5	True
J-188	861.0	Zone-1	0.00	969.5	47.0	True
J-189	868.0	Zone-1	2.66	969.6	44.0	True
J-190	863.0	Zone-1	1.05	969.5	46.1	True
J-191	862.0	Zone-1	0.00	969.8	46.6	True
J-192	861.0	Zone-1	1.31	969.9	47.1	True
J-197	855.0	Zone-1	1.31	969.6	49.6	True
J-198	856.0	Zone-1	1.05	969.6	49.1	True
J-199	867.0	Zone-1	2.56	969.9	44.5	True
J-200	868.0	Zone-1	0.00	969.8	44.0	True
J-201	865.0	Zone-1	0.00	969.8	45.3	True
J-202	818.0	Zone-1	1.84	969.6	65.6	True
J-203	820.5	Zone-1	2.63	969.6	64.5	True
J-205	812.0	Zone-1	4.95	970.5	68.6	True
J-206	827.0	Zone-1	8.59	970.2	61.9	True
J-207	845.0	Zone-1	0.26	970.6	54.3	True
J-208	845.0	Zone-1	1.58	970.2	54.2	True
J-211	764.5	Zone-1	7.43	969.5	88.7	True
J-212	760.5	Zone-1	0.00	969.5	90.4	True
J-213	758.0	Zone-1	7.43	969.5	91.5	True
J-214	759.5	Zone-1	0.00	969.5	90.9	True
J-215	765.0	Zone-1	2.48	969.5	88.5	True
J-216	779.0	Zone-1	0.00	969.5	82.4	True
J-217	763.0	Zone-1	0.00	969.5	89.4	True
J-218	770.0	Zone-1	4.95	969.5	86.3	True
J-219	767.0	Zone-1	0.00	969.5	87.6	True
J-220	760.0	Zone-1	9.90	969.5	90.7	True
J-222	821.0	Zone-1	0.00	969.5	64.3	True
J-223	818.0	Zone-1	0.00	969.6	65.6	True
J-224	819.0	Zone-1	0.00	969.6	65.1	True

	828.0	Zone-1	3.26	969.6	61.3	True
J-226	818.0	Zone-1	0.00	969.6	65.6	True
J-227	821.0	Zone-1	0.79	969.6	64.3	True
J-228	828.0	Zone-1	1.05	969.6	61.3	True
J-229	819.5	Zone-1	0.26	969.7	65.0	True
J-230	819.0	Zone-1	0.00	969.7	65.2	True
J-231	819.0	Zone-1	0.36	969.7	65.2	True
J-232	865.0	Zone-1	1.05	970.6	45.7	True
J-237	820.0	Zone-1	2.36	970.0	64.9	True
J-238	852.0	Zone-1	1.84	970.1	51.1	True
J-239	861.0	Zone-1	0.53	970.1	47.2	True
J-240	859.0	Zone-1	1.31	970.1	48.1	True
J-241	860.0	Zone-1	1.05	970.1	47.6	True
J-242	825.0	Zone-1	1.58	970.0	62.7	True
J-243	835.0	Zone-1	2.10	970.0	58.4	True
J-245	824.0	Zone-1	0.00	970.0	63.2	True
J-246	835.0	Zone-1	0.53	970.0	58.4	True
J-247	840.0	Zone-1	1.05	970.0	56.3	True
J-250	839.0	Zone-1	0.53	970.0	56.7	True
J-251	863.0	Zone-1	0.79	970.0	46.3	True
J-254	843.0	Zone-1	1.31	970.0	55.0	True
J-255	863.0	Zone-1	0.00	969.9	46.3	True
J-256	843.0	Zone-1	1.05	969.6	54.8	True
J-259	803.0	Zone-1	0.53	968.2	71.5	True
J-260	800.0	Zone-1	0.00	968.7	73.0	True
J-269	763.0	Zone-1	1.84	969.5	89.4	True
J-272	819.0	Zone-1	0.00	969.5	65.1	True
J-274	772.0	Zone-1	0.00	969.5	85.5	True
J-275	790.0	Zone-1	0.00	969.5	77.7	True
J-278	770.0	Zone-1	0.00	969.5	86.3	True
J-279	890.0	Zone-1	0.00	970.1	34.7	True
J-280	820.0	Zone-1	0.00	969.5	64.7	True
J-281	770.0	Zone-1	0.00	969.5	86.3	True
J-282	780.0	Zone-1	4.31	969.5	82.0	True
J-284	830.0	Zone-1	0.26	970.1	60.6	True
J-285	790.0	Zone-1	0.00	969.5	77.7	True
J-286	790.0	Zone-1	0.00	969.5	77.7	True
J-287	790.0	Zone-1	0.00	969.5	77.7	True
J-290	846.0	Zone-1	2.28	969.5	53.4	True
J-291	848.0	Zone-1	1.58	970.6	53.0	True
J-292	863.0	Zone-1	0.00	970.6	46.5	True
J-293	860.0	Zone-1	0.00	970.6	47.8	True
J-294	821.0	Zone-1	0.00	969.5	64.3	True
J-295	816.0	Zone-1	0.72	969.6	66.5	True
J-297	885.0	Zone-1	0.00	970.2	36.8	True
J-297	895.0	Zone-2	0.53	1,010.9	50.2	True
J-298	897.0	Zone-2	(N/A)	(N/A)	(N/A)	False
J-299	840.0	Zone-1	0.00	970.5	56.5	True
J-300	845.0	Zone-1	0.36	970.5	54.3	True
J-301	895.0	Zone-2	0.00	1,110.1	93.1	True
J-302	846.0	Zone-1	0.53	970.6	53.9	True
J-303	840.0	Zone-1	0.79	970.6	56.5	True
J-304	795.5	Zone-1	64.56	968.5	74.8	True
J-305	800.0	Zone-1	64.56	968.1	72.7	True
J-308	786.0	Zone-1	0.00	969.5	79.4	True
J-309	783.2	Zone-1	0.00	969.5	80.6	True
J-310	785.5	Zone-1	1.31	969.5	79.6	True
J-311	782.2	Zone-1	0.00	969.5	81.0	True
J-312	783.0	Zone-1	2.63	969.5	80.7	True
J-313	782.0	Zone-1	1.58	969.5	81.1	True
J-314	780.0	Zone-1	0.00	969.5	82.0	True
J-315	812.9	Zone-1	0.00	969.5	67.8	True
J-316	817.7	Zone-1	0.00	970.9	66.3	True
J-317	878.0	Zone-1	0.00	969.5	39.6	True
J-318	800.0	Zone-1	0.00	969.5	73.4	True
J-319	805.0	Zone-1	0.00	969.6	71.2	True
J-320	811.4	Zone-1	0.00	969.6	68.4	True

	808.0	Zone-1	0.00	969.6	69.9	True
J-322	826.0	Zone-1	0.00	970.6	62.6	True
J-323	812.2	<None>	0.00	969.7	68.1	True

R:\Hydraulic Analysis\Zillah\13033\13033 Zillah Hydraulic Analysis.wtg

Scenario: 2011 Peak Hour
Current Time Step: 0.000Hr
FlexTable: Tank Table

Label	Zone	Diameter (ft)	Elevation (Base) (ft)	Elevation (Minimum) (ft)	Elevation (Initial) (ft)	Elevation (Maximum) (ft)	Flow (Out net) (gpm)	Hydraulic Grade (ft)	Status (Calculated)
T-1	Zone-1	22.00	873.9	950.5	970.0	976.9	-614.93	970.0	Filling
T-2	Zone-1	35.83	868.6	922.6	970.0	972.6	338.03	970.0	Emptying
T-4	Zone-1	60.00	821.0	821.0	849.5	850.0	0.00	849.5	Filling

R:\Hydraulic Analysis\Zillah\13033\13033 Zillah Hydraulic Analysis.wtg

Scenario: 2011 Peak Hour
Current Time Step: 0.000Hr
FlexTable: Pump Table

Label	Elevation (ft)	Pump Definition	Status (Initial)	Hydraulic Grade (Suction) (ft)	Hydraulic Grade (Discharge) (ft)	Flow (Total) (gpm)	Pump Head (ft)	Zone
PMP-2	895.0	ALTEEJAN BOOSTER PUMP average day	On	970.1	1,110.1	5.44	139.99	Zone-2
PMP-3	820.0	Cutler Way Booster Pump Future	Off	849.5	969.5	0.00	0.00	Zone-1

R:\Hydraulic Analysis\Zillah\13033\13033 Zillah Hydraulic Analysis.wtg

Scenario: 2033 PHD
Current Time Step: 0.000Hr
FlexTable: Pipe Table

Label	Length (Scaled) (ft)	Diameter (in)	Material	Hazen-Williams C	Flow (gpm)	Velocity (ft/s)	Status (Initial)
P-6	818	6.0	Ductile Iron	110.0	56.81	0.64	Open
P-9	155	8.0	Ductile Iron	120.0	8.50	0.05	Open
P-10	165	8.0	Ductile Iron	120.0	6.22	0.04	Open
P-11	281	8.0	Ductile Iron	120.0	3.57	0.02	Open
P-12	297	8.0	Ductile Iron	120.0	-0.03	0.00	Open
P-13	382	8.0	Ductile Iron	120.0	-2.65	0.02	Open
P-16	359	8.0	Ductile Iron	110.0	10.16	0.06	Open
P-17	131	8.0	Ductile Iron	120.0	114.30	0.73	Open
P-18	298	8.0	Ductile Iron	120.0	85.42	0.55	Open
P-19	373	8.0	Ductile Iron	120.0	172.80	1.10	Open
P-20	781	8.0	Ductile Iron	120.0	-134.46	0.86	Open
P-22	883	8.0	Ductile Iron	120.0	-209.10	1.33	Open
P-23	335	8.0	Ductile Iron	120.0	-59.14	0.38	Open
P-25	486	6.0	Ductile Iron	110.0	59.98	0.68	Open
P-26	253	6.0	Ductile Iron	110.0	58.34	0.66	Open
P-27	650	6.0	Ductile Iron	110.0	33.82	0.38	Open
P-28	256	6.0	Ductile Iron	110.0	30.22	0.34	Open
P-29	476	6.0	Ductile Iron	110.0	41.77	0.47	Open
P-30	216	6.0	Ductile Iron	110.0	-49.35	0.56	Open
P-31	224	6.0	Ductile Iron	110.0	-62.33	0.71	Open
P-32	191	6.0	Ductile Iron	110.0	-63.26	0.72	Open
P-33	281	6.0	Ductile Iron	110.0	-95.48	1.08	Open
P-34	251	6.0	Ductile Iron	110.0	18.49	0.21	Open
P-35	326	6.0	Ductile Iron	110.0	-29.93	0.34	Open
P-36	190	6.0	Ductile Iron	110.0	46.96	0.53	Open
P-37	370	6.0	Ductile Iron	110.0	0.76	0.01	Open
P-38	231	6.0	Ductile Iron	110.0	44.49	0.50	Open
P-39	424	6.0	Ductile Iron	110.0	28.63	0.32	Open
P-40	224	6.0	Ductile Iron	110.0	13.84	0.16	Open
P-41	200	8.0	Ductile Iron	120.0	-3.08	0.02	Open
P-44	230	8.0	Ductile Iron	120.0	221.01	1.41	Open
P-45	220	8.0	Ductile Iron	120.0	220.68	1.41	Open
P-47	418	8.0	Ductile Iron	120.0	-88.35	0.56	Open
P-48	306	8.0	Ductile Iron	110.0	0.00	0.00	Open
P-49	207	8.0	Ductile Iron	120.0	289.21	1.85	Open
P-50	429	6.0	Ductile Iron	110.0	-8.15	0.09	Open
P-51	302	8.0	Ductile Iron	120.0	295.02	1.88	Open
P-52	209	8.0	Ductile Iron	120.0	101.59	0.65	Open
P-53	373	8.0	Ductile Iron	120.0	99.96	0.64	Open
P-54	370	8.0	Ductile Iron	120.0	98.65	0.63	Open
P-55	137	8.0	Ductile Iron	120.0	95.08	0.61	Open
P-56	164	6.0	Ductile Iron	110.0	-2.62	0.03	Open
P-57	311	8.0	Ductile Iron	120.0	189.36	1.21	Open
P-58	341	6.0	Ductile Iron	110.0	-95.49	1.08	Open
P-59	350	8.0	Ductile Iron	120.0	-428.99	2.74	Open
P-60	391	8.0	Ductile Iron	120.0	326.04	2.08	Open
P-61	351	8.0	Ductile Iron	120.0	-26.08	0.17	Open
P-62	209	8.0	Ductile Iron	120.0	-183.61	1.17	Open
P-63	484	8.0	Ductile Iron	120.0	-8.59	0.05	Open
P-64	288	6.0	Ductile Iron	110.0	-10.88	0.12	Open
P-65	460	8.0	Ductile Iron	120.0	176.89	1.13	Open
P-66	335	8.0	Ductile Iron	120.0	231.24	1.48	Open
P-67	249	8.0	Ductile Iron	120.0	57.86	0.37	Open
P-68	311	8.0	Ductile Iron	120.0	55.90	0.36	Open
P-69	423	8.0	Ductile Iron	120.0	143.50	0.92	Open
P-70	158	8.0	Ductile Iron	120.0	140.43	0.90	Open

P-72	1,296	8.0	Ductile Iron	110.0	263.39	1.68	Open
P-77	283	6.0	Ductile Iron	110.0	-111.62	1.27	Open
P-78	436	8.0	Ductile Iron	110.0	262.81	1.68	Open
P-79	331	8.0	Ductile Iron	110.0	262.81	1.68	Open
P-81	426	8.0	Ductile Iron	120.0	234.08	1.49	Open
P-82	748	8.0	Ductile Iron	120.0	221.42	1.41	Open
P-83	354	8.0	Ductile Iron	120.0	200.89	1.28	Open
P-87	357	8.0	Ductile Iron	120.0	79.13	0.51	Open
P-88	278	8.0	Ductile Iron	120.0	26.16	0.17	Open
P-90	360	8.0	Ductile Iron	120.0	2.29	0.01	Open
P-96	247	6.0	Ductile Iron	110.0	52.00	0.59	Open
P-97	395	6.0	Ductile Iron	110.0	49.05	0.56	Open
P-98	497	6.0	Ductile Iron	110.0	43.82	0.50	Open
P-99	240	6.0	Ductile Iron	110.0	41.20	0.47	Open
P-100	213	6.0	Ductile Iron	110.0	41.20	0.47	Open
P-101	217	6.0	Ductile Iron	110.0	-85.97	0.98	Open
P-102	275	6.0	Ductile Iron	110.0	-96.85	1.10	Open
P-103	113	6.0	Ductile Iron	110.0	-1.77	0.02	Open
P-104	224	6.0	Ductile Iron	110.0	127.17	1.44	Open
P-105	64	6.0	Ductile Iron	110.0	181.43	2.06	Open
P-106	394	8.0	Ductile Iron	110.0	9.09	0.06	Open
P-107	414	8.0	Ductile Iron	120.0	169.58	1.08	Open
P-108	242	6.0	Ductile Iron	110.0	43.53	0.49	Open
P-109	279	6.0	Ductile Iron	110.0	42.22	0.48	Open
P-110	311	6.0	Ductile Iron	110.0	39.61	0.45	Open
P-111	240	6.0	Ductile Iron	110.0	78.76	0.89	Open
P-112	51	6.0	Ductile Iron	110.0	185.87	2.11	Open
P-114	346	8.0	Ductile Iron	110.0	-0.23	0.00	Open
P-115	296	8.0	Ductile Iron	110.0	14.83	0.09	Open
P-116	396	6.0	Ductile Iron	110.0	14.83	0.17	Open
P-117	247	6.0	Ductile Iron	110.0	14.83	0.17	Open
P-118	321	6.0	Ductile Iron	110.0	2.94	0.03	Open
P-122	291	8.0	Ductile Iron	120.0	163.01	1.04	Open
P-123	345	8.0	Ductile Iron	120.0	40.46	0.26	Open
P-124	86	8.0	Ductile Iron	120.0	122.56	0.78	Open
P-125	275	8.0	Ductile Iron	120.0	110.71	0.71	Open
P-126	284	8.0	Ductile Iron	120.0	110.71	0.71	Open
P-127	428	8.0	Ductile Iron	120.0	10.21	0.07	Open
P-128	472	8.0	Ductile Iron	120.0	-37.95	0.24	Open
P-129	501	8.0	Ductile Iron	120.0	-146.57	0.94	Open
P-130	146	8.0	Ductile Iron	120.0	100.76	0.64	Open
P-131	82	8.0	Ductile Iron	120.0	337.78	2.16	Open
P-132	82	8.0	Ductile Iron	120.0	346.53	2.21	Open
P-133	227	8.0	Ductile Iron	120.0	269.02	1.72	Open
P-134	184	8.0	Ductile Iron	120.0	267.72	1.71	Open
P-135	90	8.0	Ductile Iron	120.0	400.00	2.55	Open
P-136	78	8.0	Ductile Iron	120.0	506.52	3.23	Open
P-137	328	8.0	Ductile Iron	120.0	-106.52	0.68	Open
P-138	234	6.0	Ductile Iron	110.0	9.22	0.10	Open
P-139	211	6.0	Ductile Iron	110.0	8.23	0.09	Open
P-140	214	6.0	Ductile Iron	110.0	8.23	0.09	Open
P-141	190	6.0	Ductile Iron	110.0	6.60	0.07	Open
P-142	231	6.0	Ductile Iron	110.0	-75.54	0.86	Open
P-143	380	6.0	Ductile Iron	110.0	80.50	0.91	Open
P-144	270	6.0	Ductile Iron	110.0	36.82	0.42	Open
P-145	789	6.0	Ductile Iron	110.0	-6.23	0.07	Open
P-152	258	8.0	Ductile Iron	120.0	-149.47	0.95	Open
P-153	356	8.0	Ductile Iron	120.0	-162.76	1.04	Open
P-154	360	8.0	Ductile Iron	120.0	-81.71	0.52	Open
P-155	306	6.0	Ductile Iron	110.0	-6.22	0.07	Open
P-156	128	8.0	Ductile Iron	120.0	-550.00	3.51	Open
P-157	232	8.0	Ductile Iron	120.0	310.07	1.98	Open
P-158	368	8.0	Ductile Iron	120.0	134.46	0.86	Open
P-159	326	8.0	Ductile Iron	120.0	124.74	0.80	Open
P-160	28	8.0	Ductile Iron	120.0	174.63	1.11	Open
P-162	318	8.0	Ductile Iron	120.0	164.73	1.05	Open
P-163	257	8.0	Ductile Iron	120.0	274.67	1.75	Open

	307	8.0	Ductile Iron	120.0	273.03	1.74	Open
P-165	372	8.0	Ductile Iron	120.0	57.99	0.37	Open
P-166	304	4.0	Ductile Iron	110.0	-34.54	0.88	Open
P-167	380	8.0	Ductile Iron	120.0	-133.50	0.85	Open
P-170	797	8.0	Ductile Iron	120.0	85.67	0.55	Open
P-171	215	8.0	Ductile Iron	120.0	227.95	1.45	Open
P-172	560	8.0	Ductile Iron	120.0	224.68	1.43	Open
P-173	215	8.0	Ductile Iron	120.0	178.76	1.14	Open
P-174	162	8.0	Ductile Iron	120.0	15.19	0.10	Open
P-175	837	6.0	Ductile Iron	110.0	-37.73	0.43	Open
P-176	525	6.0	Ductile Iron	110.0	1.96	0.02	Open
P-177	371	6.0	Ductile Iron	110.0	-42.96	0.49	Open
P-178	487	6.0	Ductile Iron	110.0	-37.19	0.42	Open
P-179	525	6.0	Ductile Iron	110.0	10.14	0.12	Open
P-182	291	6.0	Ductile Iron	110.0	3.93	0.04	Open
P-183	261	6.0	Ductile Iron	110.0	2.29	0.03	Open
P-184	185	8.0	Ductile Iron	120.0	51.61	0.33	Open
P-185	91	10.0	Ductile Iron	120.0	-171.80	0.70	Open
P-186	497	10.0	Ductile Iron	120.0	-180.23	0.74	Open
P-187	381	10.0	Ductile Iron	120.0	-180.23	0.74	Open
P-188	441	12.0	Ductile Iron	120.0	-269.01	0.76	Open
P-190	643	12.0	Ductile Iron	120.0	267.38	0.76	Open
P-191	416	12.0	Ductile Iron	120.0	264.19	0.75	Open
P-192	587	12.0	Ductile Iron	120.0	59.50	0.17	Open
P-193	64	6.0	Ductile Iron	110.0	59.50	0.68	Open
P-194	609	6.0	Ductile Iron	110.0	59.50	0.68	Open
P-195	70	6.0	Ductile Iron	110.0	-204.70	2.32	Open
P-197	303	8.0	Ductile Iron	110.0	1.64	0.01	Open
P-199	230	8.0	Ductile Iron	120.0	183.16	1.17	Open
P-201	157	8.0	Ductile Iron	120.0	181.52	1.16	Open
P-202	484	8.0	Ductile Iron	120.0	219.35	1.40	Open
P-203	130	8.0	Ductile Iron	120.0	437.49	2.79	Open
P-204	381	8.0	Ductile Iron	120.0	219.77	1.40	Open
P-205	751	4.0	Ductile Iron	110.0	-5.01	0.13	Open
P-206	313	6.0	Ductile Iron	110.0	-38.87	0.44	Open
P-207	354	6.0	Ductile Iron	110.0	39.57	0.45	Open
P-208	341	6.0	Ductile Iron	110.0	-30.16	0.34	Open
P-209	297	6.0	Ductile Iron	110.0	67.44	0.77	Open
P-210	522	6.0	Ductile Iron	110.0	-41.99	0.48	Open
P-211	148	6.0	Ductile Iron	110.0	107.47	1.22	Open
P-212	505	6.0	Ductile Iron	110.0	-71.69	0.81	Open
P-213	176	6.0	Ductile Iron	110.0	177.86	2.02	Open
P-214	69	6.0	Ductile Iron	110.0	172.19	1.95	Open
P-215	234	8.0	Ductile Iron	120.0	152.82	0.98	Open
P-216	507	8.0	Ductile Iron	120.0	72.12	0.46	Open
P-218	478	8.0	Ductile Iron	120.0	19.37	0.12	Open
P-220	155	8.0	Ductile Iron	110.0	0.00	0.00	Open
P-222	255	8.0	Ductile Iron	120.0	-81.03	0.52	Open
P-223	398	8.0	Ductile Iron	120.0	-81.03	0.52	Open
P-224	384	8.0	Ductile Iron	120.0	138.07	0.88	Open
P-226	670	6.0	Ductile Iron	110.0	55.23	0.63	Open
P-227	231	6.0	Ductile Iron	110.0	-2.39	0.03	Open
P-228	415	10.0	Ductile Iron	120.0	-108.84	0.44	Open
P-229	737	6.0	Ductile Iron	110.0	56.64	0.64	Open
P-230	277	6.0	Ductile Iron	110.0	49.67	0.56	Open
P-231	288	6.0	Ductile Iron	110.0	5.06	0.06	Open
P-232	297	6.0	Ductile Iron	110.0	-70.22	0.80	Open
P-233	933	6.0	Ductile Iron	110.0	-38.97	0.44	Open
P-234	272	6.0	Ductile Iron	110.0	-42.21	0.48	Open
P-235	192	6.0	Ductile Iron	110.0	-29.19	0.33	Open
P-236	312	10.0	Ductile Iron	120.0	168.10	0.69	Open
P-237	333	10.0	Ductile Iron	120.0	-200.55	0.82	Open
P-239	244	6.0	Ductile Iron	110.0	60.33	0.68	Open
P-240	407	6.0	Ductile Iron	110.0	13.02	0.15	Open
P-241	272	6.0	Ductile Iron	110.0	46.00	0.52	Open
P-242	415	6.0	Ductile Iron	110.0	-1.60	0.02	Open
P-243	314	6.0	Ductile Iron	110.0	46.20	0.52	Open

	193	6.0	Ductile Iron	110.0	22.07	0.25	Open
P-245	625	6.0	Ductile Iron	110.0	20.11	0.23	Open
P-246	480	6.0	Ductile Iron	110.0	20.63	0.23	Open
P-248	378	6.0	Ductile Iron	110.0	19.32	0.22	Open
P-249	308	6.0	Ductile Iron	110.0	34.85	0.40	Open
P-253	222	6.0	Ductile Iron	110.0	-62.23	0.71	Open
P-254	394	6.0	Ductile Iron	110.0	102.48	1.16	Open
P-255	363	8.0	Ductile Iron	120.0	69.03	0.44	Open
P-256	319	6.0	Ductile Iron	110.0	-99.29	1.13	Open
P-257	407	6.0	Ductile Iron	110.0	-112.53	1.28	Open
P-258	381	8.0	Ductile Iron	120.0	217.48	1.39	Open
P-259	337	8.0	Ductile Iron	120.0	214.39	1.37	Open
P-260	577	6.0	Ductile Iron	110.0	83.41	0.95	Open
P-261	217	8.0	Ductile Iron	120.0	-140.12	0.89	Open
P-262	293	8.0	Ductile Iron	120.0	45.87	0.29	Open
P-263	231	8.0	Ductile Iron	120.0	43.23	0.28	Open
P-264	264	8.0	Ductile Iron	120.0	37.06	0.24	Open
P-265	505	8.0	Ductile Iron	120.0	26.47	0.17	Open
P-266	519	8.0	Ductile Iron	120.0	-205.67	1.31	Open
P-267	1,780	10.0	Ductile Iron	120.0	-80.38	0.33	Open
P-268	220	10.0	Ductile Iron	120.0	869.62	3.55	Open
P-270	120	10.0	Ductile Iron	120.0	17.64	0.07	Open
P-271	230	6.0	Ductile Iron	110.0	-3.27	0.04	Open
P-272	1,307	10.0	Ductile Iron	120.0	462.79	1.89	Open
P-273	708	10.0	Ductile Iron	120.0	333.28	1.36	Open
P-274	990	8.0	Ductile Iron	120.0	7.15	0.05	Open
P-275	167	10.0	Ductile Iron	120.0	330.99	1.35	Open
P-276	410	8.0	Ductile Iron	120.0	2.29	0.01	Open
P-277	580	8.0	Ductile Iron	120.0	1.31	0.01	Open
P-278	27	8.0	Ductile Iron	120.0	26.45	0.17	Open
P-280	252	10.0	Ductile Iron	120.0	-226.48	0.93	Open
P-282	656	10.0	Ductile Iron	120.0	-352.04	1.44	Open
P-284	23	8.0	Ductile Iron	120.0	124.91	0.80	Open
P-285	121	8.0	Ductile Iron	120.0	124.45	0.79	Open
P-286	790	2.0	Ductile Iron	110.0	1.61	0.16	Open
P-288	123	8.0	Ductile Iron	120.0	-0.68	0.00	Open
P-295	227	6.0	Ductile Iron	110.0	-18.50	0.21	Open
P-296	385	6.0	Ductile Iron	110.0	-26.02	0.30	Open
P-297	259	6.0	Ductile Iron	110.0	-28.31	0.32	Open
P-298	192	6.0	Ductile Iron	110.0	1.64	0.02	Open
P-299	152	6.0	Ductile Iron	110.0	-30.93	0.35	Open
P-300	140	6.0	Ductile Iron	110.0	4.58	0.05	Open
P-301	355	6.0	Ductile Iron	110.0	2.62	0.03	Open
P-304	332	8.0	Ductile Iron	120.0	1.96	0.01	Open
P-305	424	8.0	Ductile Iron	120.0	1.31	0.01	Open
P-309	100	6.0	Ductile Iron	110.0	5.56	0.06	Open
P-310	128	6.0	Ductile Iron	110.0	0.98	0.01	Open
P-313	143	6.0	Ductile Iron	110.0	1.64	0.02	Open
P-314	158	8.0	Ductile Iron	120.0	0.00	0.00	Open
P-317	411	8.0	Ductile Iron	120.0	222.43	1.42	Open
P-318	150	8.0	Ductile Iron	120.0	217.85	1.39	Open
P-319	204	8.0	Ductile Iron	110.0	-3.27	0.02	Open
P-320	257	8.0	Ductile Iron	120.0	160.63	1.03	Open
P-323	174	8.0	Ductile Iron	120.0	0.65	0.00	Open
P-324	341	8.0	Ductile Iron	120.0	-61.00	0.39	Open
P-325	490	8.0	Ductile Iron	110.0	0.00	0.00	Open
P-327	44	8.0	Ductile Iron	120.0	-440.86	2.81	Open
P-350	70	12.0	Ductile Iron	120.0	-406.51	1.15	Open
P-372	337	8.0	Ductile Iron	120.0	252.60	1.61	Open
P-373	313	8.0	Ductile Iron	120.0	245.44	1.57	Open
P-376	550	8.0	Ductile Iron	120.0	67.18	0.43	Open
P-377	78	8.0	Ductile Iron	120.0	650.00	4.15	Open
P-378	375	12.0	Ductile Iron	120.0	-43.70	0.12	Open
P-379	110	12.0	Ductile Iron	120.0	23.49	0.07	Open
P-383	1,778	12.0	Ductile Iron	120.0	-337.94	0.96	Open
P-387	2,282	12.0	Ductile Iron	120.0	66.27	0.19	Open
P-395	508	8.0	Ductile Iron	120.0	7.89	0.05	Open

	1,724	12.0	Ductile Iron	120.0	66.27	0.19	Open
P-397	1,521	8.0	Ductile Iron	120.0	-7.89	0.05	Open
P-398	559	8.0	Ductile Iron	120.0	-7.89	0.05	Open
P-399	580	12.0	Ductile Iron	120.0	-57.77	0.16	Open
P-400	1,232	12.0	Ductile Iron	120.0	-66.27	0.19	Open
P-404	92	12.0	Ductile Iron	120.0	0.00	0.00	Open
P-405	151	12.0	Ductile Iron	120.0	0.00	0.00	Open
P-409	325	10.0	Ductile Iron	120.0	32.81	0.13	Open
P-410	335	10.0	Ductile Iron	120.0	-50.66	0.21	Open
P-411	285	6.0	Ductile Iron	110.0	80.30	0.91	Open
P-412	427	8.0	Ductile Iron	120.0	-11.13	0.07	Open
P-413	1,247	6.0	Ductile Iron	110.0	37.47	0.43	Open
P-414	219	6.0	Ductile Iron	110.0	6.22	0.07	Open
P-415	318	6.0	Ductile Iron	130.0	-1.96	0.02	Open
P-416	406	8.0	Ductile Iron	110.0	223.59	1.43	Open
P-418	184	12.0	Ductile Iron	120.0	(N/A)	(N/A)	Open
P-419	1,219	8.0	Ductile Iron	120.0	(N/A)	(N/A)	Open
P-420	851	10.0	Ductile Iron	120.0	(N/A)	(N/A)	Open
P-421	251	6.0	Ductile Iron	110.0	45.11	0.51	Open
P-422	255	6.0	Ductile Iron	110.0	80.90	0.92	Open
P-423	639	8.0	Ductile Iron	120.0	-39.06	0.25	Open
P-424	245	8.0	Ductile Iron	120.0	-39.06	0.25	Open
P-425	639	8.0	Ductile Iron	120.0	-40.37	0.26	Open
P-428	331	10.0	Ductile Iron	120.0	313.03	1.28	Open
P-429	105	10.0	Ductile Iron	120.0	361.85	1.48	Open
P-430	774	6.0	Ductile Iron	110.0	52.24	0.59	Open
P-431	368	6.0	Ductile Iron	110.0	122.36	1.39	Open
P-432	151	8.0	Ductile Iron	120.0	(N/A)	(N/A)	Open
P-436	282	6.0	Ductile Iron	110.0	2.62	0.03	Open
P-437	282	6.0	Ductile Iron	110.0	1.96	0.02	Open
P-440	193	8.0	Ductile Iron	120.0	(N/A)	(N/A)	Closed
P-441	413	8.0	Ductile Iron	120.0	(N/A)	(N/A)	Closed
P-442	504	6.0	Ductile Iron	110.0	67.18	0.76	Open
P-443	300	6.0	Ductile Iron	110.0	86.26	0.98	Open
P-444	242	6.0	Ductile Iron	110.0	85.81	0.97	Open
P-445	239	8.0	Ductile Iron	120.0	0.45	0.00	Open
P-447	60	12.0	Ductile Iron	120.0	23.49	0.07	Open
P-449	715	6.0	Ductile Iron	130.0	22.20	0.25	Open
P-450	290	10.0	Ductile Iron	130.0	21.55	0.09	Open
P-451	276	8.0	Ductile Iron	120.0	-219.10	1.40	Open
P-452	118	8.0	Ductile Iron	120.0	-379.85	2.42	Open
P-453	800	6.0	Ductile Iron	130.0	80.38	0.91	Open
P-456	339	6.0	Ductile Iron	130.0	2.62	0.03	Open
P-458	520	12.0	Ductile Iron	120.0	17.32	0.05	Open
P-459	727	12.0	Ductile Iron	120.0	33.03	0.09	Open
P-460	383	12.0	Ductile Iron	120.0	26.16	0.07	Open
P-461	425	12.0	Ductile Iron	120.0	-8.43	0.02	Open
P-462	325	12.0	Ductile Iron	120.0	-16.86	0.05	Open
P-463	289	6.0	Ductile Iron	130.0	5.56	0.06	Open
P-464	429	6.0	Ductile Iron	130.0	1.96	0.02	Open
P-465	456	6.0	Ductile Iron	130.0	8.43	0.10	Open
P-466	165	12.0	Ductile Iron	120.0	406.51	1.15	Open
P-467	1,345	12.0	Ductile Iron	120.0	406.51	1.15	Open
P-468	156	12.0	Ductile Iron	130.0	0.00	0.00	Open
P-469	155	8.0	Ductile Iron	120.0	-77.88	0.50	Open
P-470	280	8.0	Ductile Iron	120.0	-77.88	0.50	Open
P-471	113	8.0	Ductile Iron	130.0	(N/A)	(N/A)	Open
P-472	119	12.0	Ductile Iron	130.0	0.00	0.00	Closed
P-473	266	12.0	Ductile Iron	130.0	36.65	0.10	Open
P-474	285	12.0	Ductile Iron	130.0	36.65	0.10	Open
P-475	370	12.0	Ductile Iron	130.0	36.65	0.10	Open
P-476	213	6.0	Ductile Iron	110.0	53.82	0.61	Open
P-477	677	6.0	Ductile Iron	110.0	90.47	1.03	Open
P-478	143	12.0	Ductile Iron	130.0	36.65	0.10	Open
P-479	349	8.0	Ductile Iron	130.0	0.00	0.00	Open
P-480	1,012	10.0	Ductile Iron	130.0	0.00	0.00	Open
P-481	471	8.0	Ductile Iron	130.0	(N/A)	(N/A)	Open

	199	8.0	Ductile Iron	130.0	(N/A)	(N/A)	Open
P-483	60	12.0	Ductile Iron	120.0	23.49	0.07	Open
P-484	305	12.0	Ductile Iron	120.0	23.49	0.07	Open
P-486	61	6.0	Ductile Iron	130.0	(N/A)	(N/A)	Open
P-488	150	10.0	Ductile Iron	130.0	950.00	3.88	Open
P-489	70	6.0	Ductile Iron	130.0	(N/A)	(N/A)	Open
P-490	54	6.0	Ductile Iron	130.0	(N/A)	(N/A)	Open
P-491	52	6.0	Ductile Iron	130.0	(N/A)	(N/A)	Open
P-492	45	6.0	Ductile Iron	130.0	(N/A)	(N/A)	Open
P-493	44	6.0	Ductile Iron	130.0	(N/A)	(N/A)	Open
P-494	46	6.0	Ductile Iron	130.0	(N/A)	(N/A)	Open
P-495	60	6.0	Ductile Iron	130.0	(N/A)	(N/A)	Open
P-496	181	6.0	Ductile Iron	130.0	(N/A)	(N/A)	Open
P-497	48	6.0	Ductile Iron	130.0	(N/A)	(N/A)	Open
P-498	445	12.0	Ductile Iron	120.0	170.10	0.48	Open
P-499	397	8.0	Ductile Iron	120.0	170.10	1.09	Open

R:\Hydraulic Analysis\Zillah\13033\13033 Zillah Hydraulic Analysis.wtg

Scenario: 2033 PHD
Current Time Step: 0.000Hr
FlexTable: Junction Table

Label	Elevation (ft)	Zone	Demand (gpm)	Hydraulic Grade (ft)	Pressure (psi)	Is Active?
J-1	855.0	Zone-1	-550.00	972.1	50.7	True
J-2	865.0	Zone-1	-400.00	970.8	45.8	True
J-3	818.0	Zone-1	-650.00	975.7	68.2	True
J-4	842.0	Zone-1	80.38	981.0	60.1	True
J-5	820.5	Zone-1	0.33	979.9	68.9	True
J-6	820.0	Zone-1	3.27	976.8	67.8	True
J-7	818.0	Zone-1	0.33	976.8	68.7	True
J-8	810.0	Zone-1	13.31	976.9	72.2	True
J-10	816.0	Zone-1	1.31	976.4	69.4	True
J-11	819.0	Zone-1	0.00	976.4	68.1	True
J-12	820.0	Zone-1	2.62	976.4	67.7	True
J-13	810.0	Zone-1	2.99	976.4	72.0	True
J-14	810.0	Zone-1	10.16	975.7	71.7	True
J-15	819.0	Zone-1	0.00	975.7	67.8	True
J-16	819.0	Zone-1	2.43	975.6	67.8	True
J-17	824.0	Zone-1	1.64	974.3	65.0	True
J-18	824.0	Zone-1	6.04	974.2	65.0	True
J-19	838.0	Zone-1	3.60	974.0	58.9	True
J-20	841.0	Zone-1	1.46	974.2	57.6	True
J-21	841.0	Zone-1	1.70	974.1	57.6	True
J-22	842.0	Zone-1	2.02	974.0	57.1	True
J-23	845.0	Zone-1	2.29	974.0	55.8	True
J-24	834.0	Zone-1	1.64	974.6	60.8	True
J-25	835.0	Zone-1	2.29	974.2	60.2	True
J-26	832.0	Zone-1	1.70	974.1	61.5	True
J-27	835.0	Zone-1	33.46	974.0	60.1	True
J-28	835.0	Zone-1	4.85	973.9	60.1	True
J-29	852.0	Zone-1	0.00	973.0	52.3	True
J-37	872.0	Zone-1	2.29	972.9	43.6	True
J-38	870.0	Zone-1	0.98	972.9	44.5	True
J-39	857.0	Zone-1	0.98	972.9	50.1	True
J-40	860.0	Zone-1	2.94	972.8	48.8	True
J-41	862.0	Zone-1	5.23	972.6	47.9	True
J-42	860.0	Zone-1	2.62	972.5	48.7	True
J-43	840.0	Zone-1	0.00	972.4	57.3	True
J-44	845.0	Zone-1	0.00	972.4	55.1	True
J-45	816.0	Zone-1	3.08	975.6	69.0	True
J-46	764.5	Zone-1	5.29	977.4	92.1	True
J-47	776.0	Zone-1	25.92	976.4	86.7	True
J-48	764.5	Zone-1	3.08	976.4	91.7	True
J-49	780.0	Zone-1	5.66	975.6	84.6	True
J-50	809.0	Zone-1	43.88	975.2	71.9	True
J-51	822.0	Zone-1	3.08	974.5	66.0	True
J-53	819.0	Zone-1	7.38	974.5	67.3	True
J-54	819.0	Zone-1	0.00	974.2	67.1	True
J-55	817.0	Zone-1	9.35	974.4	68.1	True
J-56	818.0	Zone-1	2.35	973.9	67.5	True
J-57	819.0	Zone-1	4.06	973.3	66.7	True
J-58	820.0	Zone-1	1.64	973.2	66.3	True
J-59	830.0	Zone-1	1.31	973.1	61.9	True
J-60	845.0	Zone-1	1.96	973.0	55.4	True
J-61	850.0	Zone-1	0.00	973.0	53.2	True
J-62	821.0	Zone-1	0.33	974.7	66.5	True
J-63	823.0	Zone-1	2.62	973.0	64.9	True
J-64	824.0	Zone-1	2.86	973.0	64.5	True
J-65	826.0	Zone-1	1.87	972.6	63.4	True
J-66	850.0	Zone-1	2.29	972.6	53.0	True

J-67	858.0	Zone-1	0.00	972.6	49.6	True
J-68	815.0	Zone-1	0.00	975.0	69.2	True
J-69	817.0	Zone-1	7.47	973.4	67.7	True
J-70	826.0	Zone-1	28.76	972.4	63.3	True
J-71	803.0	Zone-1	39.80	972.5	73.3	True
J-75	808.0	Zone-1	72.41	971.9	70.9	True
J-76	817.0	Zone-1	6.42	972.4	67.2	True
J-77	822.0	Zone-1	29.88	971.9	64.9	True
J-78	828.0	Zone-1	1.96	971.9	62.3	True
J-79	840.0	Zone-1	1.64	971.9	57.1	True
J-80	830.0	Zone-1	2.77	971.6	61.3	True
J-81	833.0	Zone-1	2.94	971.6	60.0	True
J-82	827.0	Zone-1	3.07	971.7	62.6	True
J-84	808.0	Zone-1	0.00	971.0	70.5	True
J-85	809.0	Zone-1	92.71	970.3	69.8	True
J-86	861.0	Zone-1	7.86	971.3	47.7	True
J-87	838.0	Zone-1	0.98	971.3	57.7	True
J-88	850.0	Zone-1	1.31	971.2	52.4	True
J-89	865.0	Zone-1	2.62	971.1	45.9	True
J-90	860.0	Zone-1	1.31	971.0	48.0	True
J-91	850.0	Zone-1	0.00	971.0	52.4	True
J-92	855.0	Zone-1	1.64	971.0	50.2	True
J-93	863.0	Zone-1	0.00	970.9	46.7	True
J-94	863.0	Zone-1	0.00	970.5	46.5	True
J-95	870.0	Zone-1	3.60	970.8	43.6	True
J-96	870.0	Zone-1	2.94	970.6	43.5	True
J-97	892.0	Zone-2	0.23	1,010.9	51.5	True
J-98	897.0	Zone-2	8.43	1,010.9	49.3	True
J-99	895.0	Zone-2	0.00	1,010.9	50.2	True
J-100	900.5	Zone-2	0.00	1,010.9	47.8	True
J-101	901.0	Zone-2	9.27	1,010.9	47.6	True
J-102	901.0	Zone-2	2.94	1,010.9	47.6	True
J-105	890.0	Zone-2	1.96	1,010.9	52.3	True
J-106	859.0	Zone-1	0.98	970.6	48.3	True
J-107	860.0	Zone-1	4.91	970.2	47.7	True
J-108	825.0	Zone-1	5.86	970.1	62.8	True
J-109	860.0	Zone-1	0.00	970.6	47.8	True
J-110	860.5	Zone-1	1.64	970.6	47.6	True
J-111	855.0	Zone-1	1.64	970.6	50.0	True
J-112	862.0	Zone-1	1.31	970.3	46.9	True
J-113	861.0	Zone-1	2.92	971.2	47.7	True
J-114	861.0	Zone-1	1.46	971.0	47.6	True
J-115	861.0	Zone-1	1.96	970.8	47.5	True
J-116	835.0	Zone-1	6.22	970.2	58.5	True
J-117	818.0	Zone-1	2.58	970.0	65.8	True
J-118	832.0	Zone-1	1.96	970.0	59.7	True
J-120	850.0	Zone-1	1.64	970.0	51.9	True
J-121	861.0	Zone-1	0.00	970.0	47.2	True
J-122	845.0	Zone-1	1.31	970.0	54.1	True
J-123	826.0	Zone-1	9.25	970.4	62.5	True
J-124	850.0	Zone-1	0.98	970.7	52.2	True
J-125	838.0	Zone-1	9.72	970.5	57.3	True
J-126	821.0	Zone-1	43.69	970.3	64.6	True
J-127	815.0	Zone-1	38.23	969.9	67.0	True
J-128	804.0	Zone-1	215.04	969.3	71.5	True
J-129	800.0	Zone-1	92.53	969.3	73.2	True
J-130	792.0	Zone-1	13.29	969.7	76.9	True
J-133	817.0	Zone-1	6.22	970.1	66.2	True
J-134	822.0	Zone-1	7.07	970.1	64.1	True
J-135	826.0	Zone-1	8.18	969.9	62.3	True
J-141	810.0	Zone-1	18.36	969.5	69.0	True
J-142	814.0	Zone-1	2.94	969.7	67.4	True
J-143	816.0	Zone-1	1.31	969.7	66.5	True
J-144	818.0	Zone-1	3.27	969.9	65.7	True
J-145	859.0	Zone-1	1.96	969.9	48.0	True
J-146	820.0	Zone-1	0.98	969.7	64.8	True
J-147	819.0	Zone-1	8.43	969.7	65.2	True

	850.0	Zone-1	0.00	969.9	51.9	True
J-149	813.0	Zone-1	3.27	969.3	67.6	True
J-150	812.0	Zone-1	4.91	968.5	67.7	True
J-151	805.0	Zone-1	0.00	967.2	70.2	True
J-152	808.0	Zone-1	0.00	967.2	68.9	True
J-153	799.0	Zone-1	80.38	966.3	72.4	True
J-154	787.0	Zone-1	0.00	966.4	77.6	True
J-155	785.0	Zone-1	0.00	966.4	78.5	True
J-156	782.0	Zone-1	138.07	966.2	79.7	True
J-157	799.0	Zone-1	80.38	967.2	72.8	True
J-158	801.0	Zone-1	1.64	967.4	72.0	True
J-159	802.0	Zone-1	0.65	967.5	71.6	True
J-160	807.0	Zone-1	1.64	968.0	69.7	True
J-161	830.0	Zone-1	1.04	968.6	60.0	True
J-162	835.0	Zone-1	1.64	968.8	57.9	True
J-164	847.0	Zone-1	1.88	969.0	52.8	True
J-165	845.0	Zone-1	2.94	969.0	53.6	True
J-166	825.0	Zone-1	1.86	968.7	62.2	True
J-167	817.0	Zone-1	2.29	968.6	65.6	True
J-168	815.0	Zone-1	1.96	968.4	66.4	True
J-169	810.0	Zone-1	1.31	968.2	68.4	True
J-170	800.0	Zone-1	0.00	967.2	72.3	True
J-171	802.0	Zone-1	80.70	967.0	71.4	True
J-172	800.0	Zone-1	3.08	966.9	72.2	True
J-173	805.0	Zone-1	69.03	966.9	70.0	True
J-174	830.0	Zone-1	27.46	968.7	60.0	True
J-175	843.0	Zone-1	4.58	968.7	54.4	True
J-176	835.0	Zone-1	2.62	968.6	57.8	True
J-177	820.0	Zone-1	3.60	968.6	64.3	True
J-178	822.0	Zone-1	3.60	968.8	63.5	True
J-179	851.0	Zone-1	1.64	969.0	51.1	True
J-180	819.0	Zone-1	4.58	968.8	64.8	True
J-181	819.0	Zone-1	1.31	968.9	64.8	True
J-183	841.0	Zone-1	1.96	968.9	55.3	True
J-184	837.0	Zone-1	3.50	968.9	57.1	True
J-185	857.0	Zone-1	1.40	969.0	48.5	True
J-186	860.0	Zone-1	2.62	969.0	47.2	True
J-187	862.0	Zone-1	3.27	969.1	46.3	True
J-188	861.0	Zone-1	0.00	969.1	46.8	True
J-189	868.0	Zone-1	3.31	969.2	43.8	True
J-190	863.0	Zone-1	1.31	969.1	45.9	True
J-191	862.0	Zone-1	0.00	969.6	46.5	True
J-192	861.0	Zone-1	1.64	969.9	47.1	True
J-197	855.0	Zone-1	1.64	969.2	49.4	True
J-198	856.0	Zone-1	1.64	969.2	49.0	True
J-199	867.0	Zone-1	3.18	969.7	44.4	True
J-200	868.0	Zone-1	0.00	969.6	44.0	True
J-201	865.0	Zone-1	0.00	969.6	45.3	True
J-202	818.0	Zone-1	2.29	976.4	68.5	True
J-203	820.5	Zone-1	3.60	976.4	67.5	True
J-205	812.0	Zone-1	12.66	971.8	69.1	True
J-206	827.0	Zone-1	20.53	970.8	62.2	True
J-207	845.0	Zone-1	0.33	973.3	55.5	True
J-208	845.0	Zone-1	9.90	970.7	54.4	True
J-211	764.5	Zone-1	21.18	976.5	91.7	True
J-212	760.5	Zone-1	15.88	977.1	93.7	True
J-213	758.0	Zone-1	13.24	977.6	95.0	True
J-214	759.5	Zone-1	7.94	978.3	94.7	True
J-215	765.0	Zone-1	3.08	977.8	92.1	True
J-216	779.0	Zone-1	19.67	975.8	85.1	True
J-217	763.0	Zone-1	2.65	975.7	92.0	True
J-218	770.0	Zone-1	6.16	975.7	89.0	True
J-219	767.0	Zone-1	10.59	975.7	90.3	True
J-220	760.0	Zone-1	26.47	975.7	93.3	True
J-222	821.0	Zone-1	0.00	981.1	69.3	True
J-223	818.0	Zone-1	14.37	976.8	68.7	True
J-224	819.0	Zone-1	0.00	977.6	68.6	True

	828.0	Zone-1	7.15	977.6	64.7	True
J-226	818.0	Zone-1	0.00	977.0	68.8	True
J-227	821.0	Zone-1	0.98	977.0	67.5	True
J-228	828.0	Zone-1	1.31	977.0	64.4	True
J-229	819.5	Zone-1	0.33	975.6	67.5	True
J-230	819.0	Zone-1	0.65	975.7	67.8	True
J-231	819.0	Zone-1	0.45	975.7	67.8	True
J-232	865.0	Zone-1	2.29	972.9	46.7	True
J-237	820.0	Zone-1	2.94	970.0	64.9	True
J-238	852.0	Zone-1	2.29	970.1	51.1	True
J-239	861.0	Zone-1	0.98	970.1	47.2	True
J-240	859.0	Zone-1	1.64	970.1	48.1	True
J-241	860.0	Zone-1	1.64	970.2	47.7	True
J-242	825.0	Zone-1	1.96	970.0	62.8	True
J-243	835.0	Zone-1	2.62	970.0	58.4	True
J-245	824.0	Zone-1	0.00	970.0	63.2	True
J-246	835.0	Zone-1	0.65	970.0	58.4	True
J-247	840.0	Zone-1	1.31	970.0	56.3	True
J-250	839.0	Zone-1	0.65	970.0	56.7	True
J-251	863.0	Zone-1	0.98	970.0	46.3	True
J-254	843.0	Zone-1	1.64	970.0	55.0	True
J-255	863.0	Zone-1	0.00	969.9	46.3	True
J-256	843.0	Zone-1	1.31	969.2	54.6	True
J-259	803.0	Zone-1	0.65	966.3	70.7	True
J-260	800.0	Zone-1	0.00	967.2	72.3	True
J-269	763.0	Zone-1	2.29	979.0	93.4	True
J-272	819.0	Zone-1	0.00	979.8	69.6	True
J-274	772.0	Zone-1	8.43	978.9	89.5	True
J-275	790.0	Zone-1	0.00	978.9	81.7	True
J-278	770.0	Zone-1	0.00	978.9	90.4	True
J-279	890.0	Zone-1	0.00	970.2	34.7	True
J-280	820.0	Zone-1	0.00	979.7	69.1	True
J-281	770.0	Zone-1	0.00	978.9	90.4	True
J-282	780.0	Zone-1	22.59	978.9	86.0	True
J-284	830.0	Zone-1	7.16	975.1	62.8	True
J-285	790.0	Zone-1	0.00	978.9	81.7	True
J-286	790.0	Zone-1	0.00	978.9	81.7	True
J-287	790.0	Zone-1	8.50	978.9	81.7	True
J-290	846.0	Zone-1	3.17	969.0	53.2	True
J-291	848.0	Zone-1	3.27	973.2	54.2	True
J-292	863.0	Zone-1	0.00	973.2	47.7	True
J-293	860.0	Zone-1	1.31	973.3	49.0	True
J-294	821.0	Zone-1	-950.00	981.9	69.6	True
J-295	816.0	Zone-1	3.41	976.5	69.5	True
J-297	885.0	Zone-1	0.00	970.2	36.9	True
J-297	895.0	Zone-2	0.65	1,010.9	50.1	True
J-298	897.0	Zone-2	(N/A)	(N/A)	(N/A)	False
J-299	840.0	Zone-1	0.00	973.5	57.8	True
J-300	845.0	Zone-1	0.45	973.5	55.6	True
J-301	895.0	Zone-2	0.00	1,125.2	99.6	True
J-302	846.0	Zone-1	0.65	972.8	54.9	True
J-303	840.0	Zone-1	21.55	972.8	57.5	True
J-304	795.5	Zone-1	80.38	966.8	74.1	True
J-305	800.0	Zone-1	80.38	966.2	71.9	True
J-308	786.0	Zone-1	2.62	978.9	83.4	True
J-309	783.2	Zone-1	3.27	978.9	84.7	True
J-310	785.5	Zone-1	4.91	978.9	83.6	True
J-311	782.2	Zone-1	0.00	978.9	85.1	True
J-312	783.0	Zone-1	5.56	978.9	84.7	True
J-313	782.0	Zone-1	1.96	978.9	85.2	True
J-314	780.0	Zone-1	8.43	978.9	86.0	True
J-315	812.9	Zone-1	0.00	979.7	72.2	True
J-316	817.7	Zone-1	0.00	974.4	67.8	True
J-317	878.0	Zone-1	0.00	976.4	42.6	True
J-318	800.0	Zone-1	0.00	976.4	76.3	True
J-319	805.0	Zone-1	0.00	976.4	74.1	True
J-320	811.4	Zone-1	0.00	976.4	71.4	True

	808.0	Zone-1	0.00	976.4	72.8	True
J-322	826.0	Zone-1	0.00	972.8	63.5	True
J-323	812.2	<None>	0.00	970.2	68.4	True

R:\Hydraulic Analysis\Zillah\13033\13033 Zillah Hydraulic Analysis.wtg

Scenario: 2033 PHD
Current Time Step: 0.000Hr
FlexTable: Tank Table

Label	Zone	Diameter (ft)	Elevation (Base) (ft)	Elevation (Minimum) (ft)	Elevation (Initial) (ft)	Elevation (Maximum) (ft)	Flow (Out net) (gpm)	Hydraulic Grade (ft)	Status (Calculated)
T-1	Zone-1	22.00	873.9	950.5	970.0	976.9	-774.24	970.0	Filling
T-2	Zone-1	35.83	868.6	922.6	970.0	972.6	449.24	970.0	Emptying
T-4	Zone-1	60.00	821.0	821.0	849.5	850.0	0.00	849.5	Filling

R:\Hydraulic Analysis\Zillah\13033\13033 Zillah Hydraulic Analysis.wtg

Scenario: 2033 PHD
Current Time Step: 0.000Hr
FlexTable: Pump Table

Label	Elevation (ft)	Pump Definition	Status (Initial)	Hydraulic Grade (Suction) (ft)	Hydraulic Grade (Discharge) (ft)	Flow (Total) (gpm)	Pump Head (ft)	Zone
PMP-2	895.0	ALTEEJAN BOOSTER PUMP max day	On	970.2	1,125.2	23.49	155.00	Zone-2
PMP-3	820.0	Cutler Way Booster Pump Future	Off	849.5	979.7	0.00	0.00	Zone-1

R:\Hydraulic Analysis\Zillah\13033\13033 Zillah Hydraulic Analysis.wtg

Scenario: 2011 Max Day Fire Flow
Current Time Step: 0.000Hr
FlexTable: Pipe Table

Label	Length (Scaled) (ft)	Diameter (in)	Material	Hazen-Williams C	Flow (gpm)	Velocity (ft/s)	Status (Initial)
P-6	818	6.0	Ductile Iron	110.0	69.78	0.79	Open
P-9	155	8.0	Ductile Iron	120.0	3.28	0.02	Open
P-10	165	8.0	Ductile Iron	120.0	2.36	0.02	Open
P-11	281	8.0	Ductile Iron	120.0	4.50	0.03	Open
P-12	297	8.0	Ductile Iron	120.0	3.18	0.02	Open
P-13	382	8.0	Ductile Iron	120.0	2.13	0.01	Open
P-16	359	6.0	Ductile Iron	110.0	2.48	0.03	Open
P-17	131	8.0	Ductile Iron	120.0	311.11	1.99	Open
P-18	298	8.0	Ductile Iron	120.0	-274.45	1.75	Open
P-19	373	8.0	Ductile Iron	120.0	36.22	0.23	Open
P-20	781	8.0	Ductile Iron	120.0	-473.25	3.02	Open
P-22	883	8.0	Ductile Iron	120.0	-511.23	3.26	Open
P-23	335	8.0	Ductile Iron	120.0	-215.28	1.37	Open
P-25	486	6.0	Ductile Iron	110.0	211.48	2.40	Open
P-26	253	6.0	Ductile Iron	110.0	210.82	2.39	Open
P-27	650	6.0	Ductile Iron	110.0	125.81	1.43	Open
P-28	256	6.0	Ductile Iron	110.0	124.63	1.41	Open
P-29	476	6.0	Ductile Iron	110.0	152.16	1.73	Open
P-30	216	6.0	Ductile Iron	110.0	-121.93	1.38	Open
P-31	224	6.0	Ductile Iron	110.0	-259.49	2.94	Open
P-32	191	6.0	Ductile Iron	110.0	-239.99	2.72	Open
P-33	281	6.0	Ductile Iron	110.0	-344.67	3.91	Open
P-34	251	6.0	Ductile Iron	110.0	82.59	0.94	Open
P-35	326	6.0	Ductile Iron	110.0	-103.76	1.18	Open
P-36	190	6.0	Ductile Iron	110.0	185.76	2.11	Open
P-37	370	6.0	Ductile Iron	110.0	20.18	0.23	Open
P-38	231	6.0	Ductile Iron	110.0	164.89	1.87	Open
P-39	424	6.0	Ductile Iron	110.0	135.64	1.54	Open
P-40	224	6.0	Ductile Iron	110.0	28.44	0.32	Open
P-41	200	8.0	Ductile Iron	120.0	-1.24	0.01	Open
P-44	230	8.0	Ductile Iron	120.0	-207.06	1.32	Open
P-45	220	8.0	Ductile Iron	120.0	-207.06	1.32	Open
P-47	418	8.0	Ductile Iron	120.0	-711.15	4.54	Open
P-48	306	4.0	Ductile Iron	110.0	0.00	0.00	Open
P-49	207	8.0	Ductile Iron	120.0	496.12	3.17	Open
P-50	429	6.0	Ductile Iron	110.0	-259.77	2.95	Open
P-51	302	8.0	Ductile Iron	120.0	754.95	4.82	Open
P-52	209	8.0	Ductile Iron	120.0	202.33	1.29	Open
P-53	373	8.0	Ductile Iron	120.0	201.67	1.29	Open
P-54	370	8.0	Ductile Iron	120.0	201.14	1.28	Open
P-55	137	8.0	Ductile Iron	120.0	198.14	1.26	Open
P-56	164	6.0	Ductile Iron	110.0	-0.66	0.01	Open
P-57	311	8.0	Ductile Iron	120.0	552.23	3.52	Open
P-58	341	6.0	Ductile Iron	110.0	-156.00	1.77	Open
P-59	350	8.0	Ductile Iron	120.0	-857.06	5.47	Open
P-60	391	8.0	Ductile Iron	120.0	698.81	4.46	Open
P-61	351	8.0	Ductile Iron	120.0	108.73	0.69	Open
P-62	209	8.0	Ductile Iron	120.0	-470.10	3.00	Open
P-63	484	8.0	Ductile Iron	120.0	-24.33	0.16	Open
P-64	288	6.0	Ductile Iron	110.0	-25.25	0.29	Open
P-65	460	8.0	Ductile Iron	120.0	446.52	2.85	Open
P-66	335	8.0	Ductile Iron	120.0	827.18	5.28	Open
P-67	249	8.0	Ductile Iron	120.0	252.65	1.61	Open
P-68	311	8.0	Ductile Iron	120.0	251.86	1.61	Open
P-69	423	8.0	Ductile Iron	120.0	562.53	3.59	Open
P-70	158	8.0	Ductile Iron	120.0	561.56	3.58	Open

P-72	1,296	6.0	Ductile Iron	110.0	469.54	5.33	Open
P-77	283	6.0	Ductile Iron	110.0	62.85	0.71	Open
P-78	436	6.0	Ductile Iron	110.0	392.77	4.46	Open
P-79	331	6.0	Ductile Iron	110.0	392.77	4.46	Open
P-81	426	8.0	Ductile Iron	120.0	652.41	4.16	Open
P-82	748	8.0	Ductile Iron	120.0	649.93	4.15	Open
P-83	354	8.0	Ductile Iron	120.0	645.64	4.12	Open
P-87	357	8.0	Ductile Iron	120.0	160.20	1.02	Open
P-88	278	8.0	Ductile Iron	120.0	0.14	0.00	Open
P-90	360	8.0	Ductile Iron	120.0	0.79	0.01	Open
P-96	247	6.0	Ductile Iron	110.0	159.67	1.81	Open
P-97	395	6.0	Ductile Iron	110.0	158.48	1.80	Open
P-98	497	6.0	Ductile Iron	110.0	156.38	1.77	Open
P-99	240	6.0	Ductile Iron	110.0	155.33	1.76	Open
P-100	213	6.0	Ductile Iron	110.0	155.33	1.76	Open
P-101	217	6.0	Ductile Iron	110.0	-283.71	3.22	Open
P-102	275	6.0	Ductile Iron	110.0	-308.96	3.51	Open
P-103	113	6.0	Ductile Iron	110.0	-110.83	1.26	Open
P-104	224	6.0	Ductile Iron	110.0	439.05	4.98	Open
P-105	64	6.0	Ductile Iron	110.0	690.25	7.83	Open
P-106	394	6.0	Ductile Iron	110.0	29.05	0.33	Open
P-107	414	8.0	Ductile Iron	120.0	660.34	4.21	Open
P-108	242	6.0	Ductile Iron	110.0	139.81	1.59	Open
P-109	279	6.0	Ductile Iron	110.0	139.28	1.58	Open
P-110	311	6.0	Ductile Iron	110.0	138.23	1.57	Open
P-111	240	6.0	Ductile Iron	110.0	253.12	2.87	Open
P-112	51	6.0	Ductile Iron	110.0	597.09	6.78	Open
P-114	346	6.0	Ductile Iron	110.0	-0.09	0.00	Open
P-115	296	6.0	Ductile Iron	110.0	2.63	0.03	Open
P-116	396	6.0	Ductile Iron	110.0	2.63	0.03	Open
P-117	247	6.0	Ductile Iron	110.0	2.63	0.03	Open
P-118	321	6.0	Ductile Iron	110.0	1.18	0.01	Open
P-122	291	8.0	Ductile Iron	120.0	550.81	3.52	Open
P-123	345	8.0	Ductile Iron	120.0	115.41	0.74	Open
P-124	86	8.0	Ductile Iron	120.0	435.39	2.78	Open
P-125	275	8.0	Ductile Iron	120.0	344.76	2.20	Open
P-126	284	8.0	Ductile Iron	120.0	344.76	2.20	Open
P-127	428	8.0	Ductile Iron	120.0	89.98	0.57	Open
P-128	472	8.0	Ductile Iron	120.0	-30.67	0.20	Open
P-129	501	8.0	Ductile Iron	120.0	-589.96	3.77	Open
P-130	146	8.0	Ductile Iron	120.0	556.14	3.55	Open
P-131	82	8.0	Ductile Iron	120.0	927.35	5.92	Open
P-132	82	8.0	Ductile Iron	120.0	1,016.64	6.49	Open
P-133	227	8.0	Ductile Iron	120.0	822.08	5.25	Open
P-134	184	8.0	Ductile Iron	120.0	821.56	5.24	Open
P-135	90	8.0	Ductile Iron	120.0	400.00	2.55	Open
P-136	78	8.0	Ductile Iron	120.0	997.25	6.37	Open
P-137	328	8.0	Ductile Iron	120.0	-597.25	3.81	Open
P-138	234	6.0	Ductile Iron	110.0	-69.23	0.79	Open
P-139	211	6.0	Ductile Iron	110.0	-69.63	0.79	Open
P-140	214	6.0	Ductile Iron	110.0	-69.63	0.79	Open
P-141	190	6.0	Ductile Iron	110.0	-70.28	0.80	Open
P-142	231	6.0	Ductile Iron	110.0	-193.77	2.20	Open
P-143	380	6.0	Ductile Iron	110.0	122.83	1.39	Open
P-144	270	6.0	Ductile Iron	110.0	82.34	0.93	Open
P-145	789	6.0	Ductile Iron	110.0	-4.13	0.05	Open
P-152	258	8.0	Ductile Iron	120.0	-549.48	3.51	Open
P-153	356	8.0	Ductile Iron	120.0	-554.69	3.54	Open
P-154	360	8.0	Ductile Iron	120.0	-333.77	2.13	Open
P-155	306	6.0	Ductile Iron	110.0	-2.36	0.03	Open
P-156	128	8.0	Ductile Iron	120.0	-550.00	3.51	Open
P-157	232	8.0	Ductile Iron	120.0	178.79	1.14	Open
P-158	368	8.0	Ductile Iron	120.0	231.52	1.48	Open
P-159	326	8.0	Ductile Iron	120.0	228.34	1.46	Open
P-160	28	8.0	Ductile Iron	120.0	-52.86	0.34	Open
P-162	318	8.0	Ductile Iron	120.0	-53.65	0.34	Open
P-163	257	8.0	Ductile Iron	120.0	254.50	1.62	Open

	307	8.0	Ductile Iron	120.0	152.74	0.97	Open
P-165	372	8.0	Ductile Iron	120.0	119.23	0.76	Open
P-166	304	4.0	Ductile Iron	110.0	65.46	1.67	Open
P-167	380	8.0	Ductile Iron	120.0	-441.94	2.82	Open
P-170	797	8.0	Ductile Iron	120.0	503.93	3.22	Open
P-171	215	8.0	Ductile Iron	120.0	404.12	2.58	Open
P-172	560	8.0	Ductile Iron	120.0	402.81	2.57	Open
P-173	215	8.0	Ductile Iron	120.0	584.20	3.73	Open
P-174	162	8.0	Ductile Iron	120.0	675.45	4.31	Open
P-175	837	6.0	Ductile Iron	110.0	-131.37	1.49	Open
P-176	525	6.0	Ductile Iron	110.0	0.79	0.01	Open
P-177	371	6.0	Ductile Iron	110.0	-133.21	1.51	Open
P-178	487	6.0	Ductile Iron	110.0	-84.11	0.95	Open
P-179	525	6.0	Ductile Iron	110.0	4.07	0.05	Open
P-182	291	6.0	Ductile Iron	110.0	1.58	0.02	Open
P-183	261	6.0	Ductile Iron	110.0	0.92	0.01	Open
P-184	185	8.0	Ductile Iron	120.0	806.29	5.15	Open
P-185	91	10.0	Ductile Iron	120.0	622.57	2.54	Open
P-186	497	10.0	Ductile Iron	120.0	622.57	2.54	Open
P-187	381	10.0	Ductile Iron	120.0	622.57	2.54	Open
P-188	441	12.0	Ductile Iron	120.0	351.19	1.00	Open
P-190	643	12.0	Ductile Iron	120.0	-351.85	1.00	Open
P-191	416	12.0	Ductile Iron	120.0	-353.12	1.00	Open
P-192	587	12.0	Ductile Iron	120.0	-79.53	0.23	Open
P-193	64	6.0	Ductile Iron	110.0	-79.53	0.90	Open
P-194	609	6.0	Ductile Iron	110.0	-79.53	0.90	Open
P-195	70	6.0	Ductile Iron	110.0	273.60	3.10	Open
P-197	303	4.0	Ductile Iron	110.0	0.53	0.01	Open
P-199	230	8.0	Ductile Iron	120.0	-69.92	0.45	Open
P-201	157	8.0	Ductile Iron	120.0	-70.57	0.45	Open
P-202	484	8.0	Ductile Iron	120.0	-140.24	0.90	Open
P-203	130	8.0	Ductile Iron	120.0	260.07	1.66	Open
P-204	381	8.0	Ductile Iron	120.0	400.84	2.56	Open
P-205	751	4.0	Ductile Iron	110.0	17.70	0.45	Open
P-206	313	6.0	Ductile Iron	110.0	69.28	0.79	Open
P-207	354	6.0	Ductile Iron	110.0	52.50	0.60	Open
P-208	341	6.0	Ductile Iron	110.0	36.74	0.42	Open
P-209	297	6.0	Ductile Iron	110.0	14.97	0.17	Open
P-210	522	6.0	Ductile Iron	110.0	34.75	0.39	Open
P-211	148	6.0	Ductile Iron	110.0	-20.57	0.23	Open
P-212	505	6.0	Ductile Iron	110.0	43.15	0.49	Open
P-213	176	6.0	Ductile Iron	110.0	-64.25	0.73	Open
P-214	69	6.0	Ductile Iron	110.0	-46.55	0.53	Open
P-215	234	8.0	Ductile Iron	120.0	33.52	0.21	Open
P-216	507	8.0	Ductile Iron	120.0	1.24	0.01	Open
P-218	478	8.0	Ductile Iron	120.0	-80.06	0.51	Open
P-220	155	6.0	Ductile Iron	110.0	0.00	0.00	Open
P-222	255	8.0	Ductile Iron	120.0	-32.54	0.21	Open
P-223	398	8.0	Ductile Iron	120.0	-32.54	0.21	Open
P-224	384	8.0	Ductile Iron	120.0	32.28	0.21	Open
P-226	670	6.0	Ductile Iron	110.0	8.21	0.09	Open
P-227	231	6.0	Ductile Iron	110.0	33.93	0.38	Open
P-228	415	10.0	Ductile Iron	120.0	256.25	1.05	Open
P-229	737	6.0	Ductile Iron	110.0	-39.17	0.44	Open
P-230	277	6.0	Ductile Iron	110.0	-7.08	0.08	Open
P-231	288	6.0	Ductile Iron	110.0	26.62	0.30	Open
P-232	297	6.0	Ductile Iron	110.0	68.59	0.78	Open
P-233	933	6.0	Ductile Iron	110.0	31.30	0.36	Open
P-234	272	6.0	Ductile Iron	110.0	21.21	0.24	Open
P-235	192	6.0	Ductile Iron	110.0	-7.66	0.09	Open
P-236	312	10.0	Ductile Iron	120.0	-294.37	1.20	Open
P-237	333	10.0	Ductile Iron	120.0	285.66	1.17	Open
P-239	244	6.0	Ductile Iron	110.0	-68.80	0.78	Open
P-240	407	6.0	Ductile Iron	110.0	-28.86	0.33	Open
P-241	272	6.0	Ductile Iron	110.0	-40.46	0.46	Open
P-242	415	6.0	Ductile Iron	110.0	-9.44	0.11	Open
P-243	314	6.0	Ductile Iron	110.0	-31.55	0.36	Open

	193	6.0	Ductile Iron	110.0	-16.37	0.19	Open
P-245	625	6.0	Ductile Iron	110.0	-17.16	0.19	Open
P-246	480	6.0	Ductile Iron	110.0	-16.31	0.19	Open
P-248	378	6.0	Ductile Iron	110.0	-16.84	0.19	Open
P-249	308	6.0	Ductile Iron	110.0	-35.84	0.41	Open
P-253	222	6.0	Ductile Iron	110.0	-216.52	2.46	Open
P-254	394	6.0	Ductile Iron	110.0	259.90	2.95	Open
P-255	363	8.0	Ductile Iron	120.0	0.00	0.00	Open
P-256	319	6.0	Ductile Iron	110.0	-220.23	2.50	Open
P-257	407	6.0	Ductile Iron	110.0	-223.94	2.54	Open
P-258	381	8.0	Ductile Iron	120.0	512.47	3.27	Open
P-259	337	8.0	Ductile Iron	120.0	511.23	3.26	Open
P-260	577	6.0	Ductile Iron	110.0	220.23	2.50	Open
P-261	217	8.0	Ductile Iron	120.0	-473.25	3.02	Open
P-262	293	8.0	Ductile Iron	120.0	7.43	0.05	Open
P-263	231	8.0	Ductile Iron	120.0	7.43	0.05	Open
P-264	264	8.0	Ductile Iron	120.0	4.95	0.03	Open
P-265	505	8.0	Ductile Iron	120.0	4.95	0.03	Open
P-266	519	8.0	Ductile Iron	120.0	-480.67	3.07	Open
P-267	1,780	10.0	Ductile Iron	120.0	-32.28	0.13	Open
P-268	220	10.0	Ductile Iron	120.0	-32.28	0.13	Open
P-270	120	10.0	Ductile Iron	120.0	1.31	0.01	Open
P-271	230	6.0	Ductile Iron	110.0	-1.31	0.01	Open
P-272	1,307	10.0	Ductile Iron	120.0	1,079.46	4.41	Open
P-273	708	10.0	Ductile Iron	120.0	826.30	3.38	Open
P-274	990	8.0	Ductile Iron	120.0	1.63	0.01	Open
P-275	167	10.0	Ductile Iron	120.0	825.39	3.37	Open
P-276	410	8.0	Ductile Iron	120.0	0.92	0.01	Open
P-277	580	8.0	Ductile Iron	120.0	0.53	0.00	Open
P-278	27	8.0	Ductile Iron	120.0	585.56	3.74	Open
P-280	252	10.0	Ductile Iron	120.0	-682.66	2.79	Open
P-282	656	10.0	Ductile Iron	120.0	-996.43	4.07	Open
P-284	23	8.0	Ductile Iron	120.0	313.77	2.00	Open
P-285	121	8.0	Ductile Iron	120.0	313.59	2.00	Open
P-286	790	2.0	Ductile Iron	110.0	2.22	0.23	Open
P-288	123	8.0	Ductile Iron	120.0	1.69	0.01	Open
P-295	227	6.0	Ductile Iron	110.0	-53.69	0.61	Open
P-296	385	6.0	Ductile Iron	110.0	-56.71	0.64	Open
P-297	259	6.0	Ductile Iron	110.0	-57.63	0.65	Open
P-298	192	6.0	Ductile Iron	110.0	0.66	0.01	Open
P-299	152	6.0	Ductile Iron	110.0	-58.55	0.66	Open
P-300	140	6.0	Ductile Iron	110.0	1.84	0.02	Open
P-301	355	6.0	Ductile Iron	110.0	1.05	0.01	Open
P-304	332	8.0	Ductile Iron	120.0	0.79	0.01	Open
P-305	424	8.0	Ductile Iron	120.0	0.53	0.00	Open
P-309	100	6.0	Ductile Iron	110.0	2.23	0.03	Open
P-310	128	6.0	Ductile Iron	110.0	0.39	0.00	Open
P-313	143	6.0	Ductile Iron	110.0	0.66	0.01	Open
P-314	158	8.0	Ductile Iron	120.0	0.00	0.00	Open
P-317	411	8.0	Ductile Iron	120.0	183.33	1.17	Open
P-318	150	8.0	Ductile Iron	120.0	181.62	1.16	Open
P-319	204	4.0	Ductile Iron	110.0	-1.18	0.03	Open
P-320	257	8.0	Ductile Iron	120.0	-92.44	0.59	Open
P-323	174	8.0	Ductile Iron	120.0	0.26	0.00	Open
P-324	341	8.0	Ductile Iron	120.0	-112.34	0.72	Open
P-325	490	6.0	Ductile Iron	110.0	0.00	0.00	Open
P-327	44	8.0	Ductile Iron	120.0	-241.71	1.54	Open
P-350	70	12.0	Ductile Iron	120.0	1,111.87	3.15	Open
P-372	337	8.0	Ductile Iron	120.0	1,268.08	8.09	Open
P-373	313	8.0	Ductile Iron	120.0	1,267.95	8.09	Open
P-376	550	8.0	Ductile Iron	120.0	67.89	0.43	Open
P-377	78	8.0	Ductile Iron	120.0	650.00	4.15	Open
P-378	375	12.0	Ductile Iron	120.0	-65.18	0.18	Open
P-379	110	12.0	Ductile Iron	120.0	2.72	0.01	Open
P-383	1,778	12.0	Ductile Iron	120.0	-736.41	2.09	Open
P-387	2,282	12.0	Ductile Iron	120.0	4.92	0.01	Open
P-395	508	8.0	Ductile Iron	120.0	-2.33	0.01	Open

	1,724	12.0	Ductile Iron	120.0	4.92	0.01	Open
P-397	1,521	8.0	Ductile Iron	120.0	2.33	0.01	Open
P-398	559	8.0	Ductile Iron	120.0	2.33	0.01	Open
P-399	580	12.0	Ductile Iron	120.0	-4.92	0.01	Open
P-400	1,232	12.0	Ductile Iron	120.0	-4.92	0.01	Open
P-404	92	12.0	Ductile Iron	120.0	1,854.12	5.26	Open
P-405	151	12.0	Ductile Iron	120.0	1,854.12	5.26	Open
P-409	325	10.0	Ductile Iron	120.0	250.75	1.02	Open
P-410	335	10.0	Ductile Iron	120.0	265.64	1.09	Open
P-411	285	6.0	Ductile Iron	110.0	-16.03	0.18	Open
P-412	427	8.0	Ductile Iron	120.0	-6.10	0.04	Open
P-413	1,247	6.0	Ductile Iron	110.0	38.00	0.43	Open
P-414	219	6.0	Ductile Iron	110.0	2.50	0.03	Open
P-415	318	6.0	Ductile Iron	130.0	-0.79	0.01	Open
P-416	406	6.0	Ductile Iron	110.0	456.28	5.18	Open
P-418	184	12.0	Ductile Iron	120.0	(N/A)	(N/A)	Open
P-419	1,219	8.0	Ductile Iron	120.0	(N/A)	(N/A)	Open
P-420	851	8.0	Ductile Iron	120.0	(N/A)	(N/A)	Open
P-421	251	6.0	Ductile Iron	110.0	144.72	1.64	Open
P-422	255	6.0	Ductile Iron	110.0	271.03	3.08	Open
P-423	639	8.0	Ductile Iron	120.0	-127.10	0.81	Open
P-424	245	8.0	Ductile Iron	120.0	-127.10	0.81	Open
P-425	639	8.0	Ductile Iron	120.0	-127.10	0.81	Open
P-428	331	10.0	Ductile Iron	120.0	823.94	3.37	Open
P-429	105	10.0	Ductile Iron	120.0	1,000.24	4.09	Open
P-430	774	6.0	Ductile Iron	110.0	176.66	2.00	Open
P-431	368	6.0	Ductile Iron	110.0	251.52	2.85	Open
P-432	151	8.0	Ductile Iron	120.0	(N/A)	(N/A)	Open
P-436	282	6.0	Ductile Iron	110.0	1.05	0.01	Open
P-437	282	6.0	Ductile Iron	110.0	0.79	0.01	Open
P-440	193	8.0	Ductile Iron	120.0	(N/A)	(N/A)	Open
P-441	413	8.0	Ductile Iron	120.0	(N/A)	(N/A)	Open
P-442	504	6.0	Ductile Iron	110.0	67.89	0.77	Open
P-443	300	6.0	Ductile Iron	110.0	272.13	3.09	Open
P-444	242	6.0	Ductile Iron	110.0	271.95	3.09	Open
P-445	239	8.0	Ductile Iron	120.0	0.18	0.00	Open
P-447	60	12.0	Ductile Iron	120.0	2.72	0.01	Open
P-449	715	6.0	Ductile Iron	130.0	0.66	0.01	Open
P-450	290	10.0	Ductile Iron	130.0	0.39	0.00	Open
P-451	276	8.0	Ductile Iron	120.0	-64.82	0.41	Open
P-452	118	8.0	Ductile Iron	120.0	-129.37	0.83	Open
P-453	800	6.0	Ductile Iron	130.0	32.28	0.37	Open
P-456	339	6.0	Ductile Iron	130.0	0.00	0.00	Open
P-458	520	12.0	Ductile Iron	120.0	4.49	0.01	Open
P-459	727	12.0	Ductile Iron	120.0	7.25	0.02	Open
P-460	383	12.0	Ductile Iron	120.0	5.80	0.02	Open
P-461	425	12.0	Ductile Iron	120.0	0.00	0.00	Open
P-462	325	12.0	Ductile Iron	120.0	0.00	0.00	Open
P-463	289	6.0	Ductile Iron	130.0	1.31	0.01	Open
P-464	429	6.0	Ductile Iron	130.0	0.79	0.01	Open
P-465	456	6.0	Ductile Iron	130.0	0.00	0.00	Open
P-466	165	12.0	Ductile Iron	120.0	-1,111.87	3.15	Open
P-467	1,345	12.0	Ductile Iron	120.0	742.25	2.11	Open
P-468	156	12.0	Ductile Iron	130.0	1,854.12	5.26	Open
P-469	155	8.0	Ductile Iron	120.0	-706.94	4.51	Open
P-470	280	8.0	Ductile Iron	120.0	-706.94	4.51	Open
P-471	113	8.0	Ductile Iron	130.0	(N/A)	(N/A)	Open
P-472	119	12.0	Ductile Iron	130.0	0.00	0.00	Closed
P-473	266	12.0	Ductile Iron	130.0	242.13	0.69	Open
P-474	285	12.0	Ductile Iron	130.0	242.13	0.69	Open
P-475	370	12.0	Ductile Iron	130.0	242.13	0.69	Open
P-476	213	6.0	Ductile Iron	110.0	69.78	0.79	Open
P-477	677	6.0	Ductile Iron	110.0	311.91	3.54	Open
P-478	143	12.0	Ductile Iron	130.0	242.13	0.69	Open
P-479	349	8.0	Ductile Iron	130.0	0.00	0.00	Open
P-480	1,012	10.0	Ductile Iron	130.0	0.00	0.00	Open
P-481	471	6.0	Ductile Iron	130.0	(N/A)	(N/A)	Open

	199	6.0	Ductile Iron	130.0	(N/A)	(N/A)	Open
P-483	60	12.0	Ductile Iron	120.0	2.72	0.01	Open
P-484	305	12.0	Ductile Iron	120.0	2.72	0.01	Open
P-486	61	6.0	Ductile Iron	130.0	(N/A)	(N/A)	Open
P-488	150	6.0	Ductile Iron	130.0	0.00	0.00	Open
P-489	70	6.0	Ductile Iron	130.0	(N/A)	(N/A)	Open
P-490	54	6.0	Ductile Iron	130.0	(N/A)	(N/A)	Open
P-491	52	6.0	Ductile Iron	130.0	(N/A)	(N/A)	Open
P-492	45	6.0	Ductile Iron	130.0	(N/A)	(N/A)	Open
P-493	44	6.0	Ductile Iron	130.0	(N/A)	(N/A)	Open
P-494	46	6.0	Ductile Iron	130.0	(N/A)	(N/A)	Open
P-495	60	6.0	Ductile Iron	130.0	(N/A)	(N/A)	Open
P-496	181	6.0	Ductile Iron	130.0	(N/A)	(N/A)	Open
P-497	48	6.0	Ductile Iron	130.0	(N/A)	(N/A)	Open
P-498	445	12.0	Ductile Iron	120.0	355.54	1.01	Open
P-499	397	8.0	Ductile Iron	120.0	355.54	2.27	Open

R:\Hydraulic Analysis\Zillah\13033\13033 Zillah Hydraulic Analysis.wtg

Scenario: 2011 Max Day Fire Flow
Current Time Step: 0.000Hr
Fire Flow Node FlexTable: Fire Flow Report

Label	Zone	Elevation (ft)	Hydraulic Grade (ft)	Demand (gpm)	Satisfies Fire Flow Constraints?	Fire Flow (Available) (gpm)	Pressure (psi)	Pressure (Calculated Residual) (psi)	Is Active?
H-2	<None>	0.0	(N/A)	(N/A)	(N/A)	(N/A)	(N/A)	(N/A)	False
H-3	<None>	0.0	(N/A)	(N/A)	(N/A)	(N/A)	(N/A)	(N/A)	False
H-4	<None>	0.0	(N/A)	(N/A)	(N/A)	(N/A)	(N/A)	(N/A)	False
H-5	<None>	0.0	(N/A)	(N/A)	(N/A)	(N/A)	(N/A)	(N/A)	False
H-6	<None>	0.0	(N/A)	(N/A)	(N/A)	(N/A)	(N/A)	(N/A)	False
H-7	<None>	0.0	(N/A)	(N/A)	(N/A)	(N/A)	(N/A)	(N/A)	False
H-8	<None>	0.0	(N/A)	(N/A)	(N/A)	(N/A)	(N/A)	(N/A)	False
H-9	<None>	0.0	(N/A)	(N/A)	(N/A)	(N/A)	(N/A)	(N/A)	False
H-10	<None>	0.0	(N/A)	(N/A)	(N/A)	(N/A)	(N/A)	(N/A)	False
H-11	<None>	0.0	(N/A)	(N/A)	(N/A)	(N/A)	(N/A)	(N/A)	False
J-1	Zone-1	855.0	962.8	-550.00	True	4,627.67	46.6	20.0	True
J-2	Zone-1	865.0	954.5	-400.00	True	4,667.98	38.7	20.0	True
J-3	Zone-1	818.0	986.8	-650.00	True	4,801.89	73.0	20.0	True
J-4	Zone-1	842.0	1,040.6	32.28	True	2,782.57	85.9	20.0	True
J-5	Zone-1	820.5	1,040.6	0.13	True	6,280.30	95.2	37.7	True
J-6	Zone-1	820.0	1,025.5	1.31	True	2,191.64	88.9	20.0	True
J-7	Zone-1	818.0	1,025.5	0.13	True	5,614.47	89.8	20.9	True
J-8	Zone-1	810.0	1,027.0	5.08	True	3,738.15	93.9	20.0	True
J-10	Zone-1	816.0	1,023.1	0.53	True	5,775.83	89.6	22.0	True
J-11	Zone-1	819.0	1,023.1	0.00	True	3,594.91	88.3	20.6	True
J-12	Zone-1	820.0	1,023.1	1.05	True	3,187.87	87.9	20.0	True
J-13	Zone-1	810.0	1,026.4	0.00	True	3,203.96	93.6	20.0	True
J-14	Zone-1	810.0	1,018.1	2.48	True	1,852.82	90.0	20.0	True
J-15	Zone-1	819.0	1,018.1	0.00	True	5,749.91	86.1	20.0	True
J-16	Zone-1	819.0	1,017.7	0.00	True	6,122.14	86.0	21.1	True
J-17	Zone-1	824.0	993.4	0.66	True	2,642.23	73.3	20.0	True
J-18	Zone-1	824.0	992.0	2.42	True	3,001.91	72.7	20.0	True
J-19	Zone-1	838.0	990.6	1.18	True	2,125.38	66.0	20.0	True
J-20	Zone-1	841.0	991.7	0.59	True	2,965.53	65.2	20.0	True
J-21	Zone-1	841.0	990.9	0.68	True	2,936.09	64.8	20.0	True
J-22	Zone-1	842.0	990.0	0.81	True	2,828.03	64.0	20.0	True
J-23	Zone-1	845.0	990.0	0.92	True	2,563.80	62.7	20.0	True
J-24	Zone-1	834.0	996.2	0.66	True	5,147.01	70.2	20.0	True
J-25	Zone-1	835.0	992.2	0.92	True	3,409.86	68.0	20.0	True
J-26	Zone-1	832.0	990.8	0.68	True	3,270.35	68.7	20.0	True
J-27	Zone-1	835.0	989.0	13.44	True	3,551.33	66.6	20.0	True
J-28	Zone-1	835.0	988.5	1.95	True	2,981.90	66.4	20.0	True
J-29	Zone-1	852.0	980.6	0.00	True	2,387.86	55.6	28.0	True
J-37	Zone-1	872.0	980.4	0.79	True	1,360.21	46.9	20.0	True
J-38	Zone-1	870.0	980.4	0.39	True	1,620.07	47.7	20.9	True
J-39	Zone-1	857.0	980.4	0.39	True	1,950.21	53.4	26.5	True
J-40	Zone-1	860.0	979.5	1.18	True	1,674.43	51.7	20.0	True
J-41	Zone-1	862.0	978.2	2.10	True	1,445.02	50.3	20.0	True
J-42	Zone-1	860.0	976.6	1.05	True	1,577.45	50.4	20.0	True
J-43	Zone-1	840.0	975.8	0.00	True	2,017.15	58.8	24.7	True
J-44	Zone-1	845.0	975.1	0.00	True	3,268.73	56.3	21.1	True
J-45	Zone-1	816.0	1,018.3	1.24	True	5,411.67	87.5	22.2	True
J-46	Zone-1	764.5	1,031.8	0.00	True	4,277.77	115.7	41.2	True
J-47	Zone-1	776.0	1,026.4	3.71	True	3,623.74	108.3	63.8	True
J-48	Zone-1	764.5	1,026.8	1.24	True	3,747.91	113.5	45.7	True
J-49	Zone-1	780.0	1,022.4	0.00	True	4,441.14	104.9	28.1	True
J-50	Zone-1	809.0	1,018.3	39.93	True	4,964.98	90.6	20.0	True
J-51	Zone-1	822.0	991.4	1.24	True	3,590.67	73.3	20.0	True
J-53	Zone-1	819.0	991.4	2.96	True	4,875.45	74.6	21.3	True
J-54	Zone-1	819.0	992.2	0.00	True	674.32	74.9	20.0	True
J-55	Zone-1	817.0	986.6	3.75	True	5,464.38	73.4	27.5	True
J-56	Zone-1	818.0	985.4	0.94	True	5,254.93	72.4	28.9	True
J-57	Zone-1	819.0	981.6	0.39	True	5,083.39	70.4	31.4	True
J-58	Zone-1	820.0	981.4	0.66	True	4,490.78	69.8	25.5	True
J-59	Zone-1	830.0	981.0	0.53	True	3,793.91	65.3	23.1	True
J-60	Zone-1	845.0	980.6	0.79	True	3,299.18	58.7	24.1	True
J-61	Zone-1	850.0	980.4	0.00	True	3,141.75	56.4	25.2	True
J-62	Zone-1	821.0	986.3	0.00	True	5,326.92	71.5	20.0	True
J-63	Zone-1	823.0	979.4	0.66	True	2,312.04	67.7	20.0	True
J-64	Zone-1	824.0	979.4	1.15	True	5,513.66	67.2	26.7	True
J-65	Zone-1	826.0	977.2	0.75	True	5,270.52	65.4	27.0	True
J-66	Zone-1	850.0	977.2	0.92	True	3,292.27	55.0	20.0	True
J-67	Zone-1	858.0	977.3	0.00	True	3,137.65	51.6	20.0	True
J-68	Zone-1	815.0	986.1	0.00	True	5,423.81	74.0	21.0	True
J-69	Zone-1	817.0	980.5	2.25	True	5,902.94	70.7	20.0	True

J-70	Zone-1	826.0	976.1	11.55	True	6,024.77	65.0	27.7	True
J-71	Zone-1	803.0	986.0	13.26	True	2,458.83	79.2	20.0	True
J-75	Zone-1	808.0	976.4	0.66	True	3,771.80	72.9	20.0	True
J-76	Zone-1	817.0	976.2	0.53	True	6,608.27	68.9	24.1	True
J-77	Zone-1	822.0	971.1	12.00	True	6,309.32	64.5	20.0	True
J-78	Zone-1	828.0	970.7	0.79	True	5,246.80	61.7	20.0	True
J-79	Zone-1	840.0	970.2	0.66	True	5,208.36	56.3	20.0	True
J-80	Zone-1	830.0	967.0	0.85	True	5,776.02	59.3	20.0	True
J-81	Zone-1	833.0	966.9	0.66	True	5,423.92	57.9	20.0	True
J-82	Zone-1	827.0	968.0	0.97	True	5,268.06	61.0	20.0	True
J-84	Zone-1	808.0	968.6	0.00	True	2,852.43	69.5	20.0	True
J-85	Zone-1	809.0	962.7	37.23	True	3,869.64	66.5	20.0	True
J-86	Zone-1	861.0	962.9	3.16	True	5,965.65	44.1	20.0	True
J-87	Zone-1	838.0	962.9	0.39	True	6,086.69	54.0	25.5	True
J-88	Zone-1	850.0	962.2	0.53	True	2,428.41	48.6	20.0	True
J-89	Zone-1	865.0	961.5	1.05	True	1,949.59	41.8	20.0	True
J-90	Zone-1	860.0	960.7	0.53	True	3,949.66	43.6	20.0	True
J-91	Zone-1	850.0	960.8	0.00	True	6,133.86	48.0	20.1	True
J-92	Zone-1	855.0	960.5	0.66	True	6,000.32	45.6	20.0	True
J-93	Zone-1	863.0	959.6	0.00	True	4,232.29	41.8	20.0	True
J-94	Zone-1	863.0	954.1	0.00	True	8,080.46	39.4	20.7	True
J-95	Zone-1	870.0	958.8	0.79	True	4,455.44	38.4	20.0	True
J-96	Zone-1	870.0	956.8	1.18	True	4,533.15	37.6	23.1	True
J-97	Zone-2	892.0	1,010.9	0.09	True	1,464.39	51.5	20.0	True
J-98	Zone-2	897.0	1,010.9	0.00	True	2,172.02	49.3	21.7	True
J-99	Zone-2	895.0	1,010.9	0.00	True	1,477.12	50.2	22.6	True
J-100	Zone-2	900.5	1,010.9	0.00	True	941.33	47.8	20.2	True
J-101	Zone-2	901.0	1,010.9	0.39	True	799.73	47.6	20.0	True
J-102	Zone-2	901.0	1,010.9	1.18	True	682.79	47.6	20.0	True
J-105	Zone-2	890.0	1,010.9	0.79	True	677.15	52.3	20.0	True
J-106	Zone-1	859.0	957.0	0.39	True	2,189.96	42.4	20.0	True
J-107	Zone-1	860.0	956.4	1.97	True	1,102.83	41.7	30.6	True
J-108	Zone-1	825.0	956.4	2.35	True	1,561.59	56.8	42.4	True
J-109	Zone-1	860.0	957.1	0.00	True	1,948.67	42.0	20.0	True
J-110	Zone-1	860.5	957.3	0.66	True	2,074.20	41.9	20.0	True
J-111	Zone-1	855.0	957.4	0.66	True	3,102.63	44.3	20.0	True
J-112	Zone-1	862.0	955.2	0.53	True	6,418.46	40.3	20.0	True
J-113	Zone-1	861.0	961.9	0.00	True	7,301.53	43.6	20.0	True
J-114	Zone-1	861.0	960.3	0.68	True	7,408.11	43.0	20.0	True
J-115	Zone-1	861.0	958.6	0.79	True	6,990.36	42.2	20.0	True
J-116	Zone-1	835.0	956.6	2.50	True	2,278.61	52.6	31.1	True
J-117	Zone-1	818.0	955.9	0.53	True	1,548.15	59.7	41.7	True
J-118	Zone-1	832.0	955.9	0.79	True	772.75	53.6	33.4	True
J-120	Zone-1	850.0	955.9	0.66	True	631.42	45.8	25.6	True
J-121	Zone-1	861.0	955.9	0.00	True	551.76	41.0	20.9	True
J-122	Zone-1	845.0	955.9	0.53	True	500.54	48.0	27.8	True
J-123	Zone-1	826.0	961.7	3.71	True	7,285.65	58.7	20.0	True
J-124	Zone-1	850.0	961.7	0.13	True	6,193.79	48.3	20.0	True
J-125	Zone-1	838.0	961.1	3.18	True	4,926.30	53.3	20.0	True
J-126	Zone-1	821.0	960.7	7.43	True	6,495.17	60.4	20.0	True
J-127	Zone-1	815.0	961.3	15.35	True	6,001.66	63.3	20.0	True
J-128	Zone-1	804.0	961.1	33.52	True	3,888.43	67.9	20.0	True
J-129	Zone-1	800.0	960.9	53.76	True	3,091.06	69.6	20.0	True
J-130	Zone-1	792.0	959.5	3.48	True	5,594.96	72.5	20.0	True
J-133	Zone-1	817.0	958.2	2.36	True	1,675.65	61.1	20.0	True
J-134	Zone-1	822.0	958.2	2.84	True	5,476.52	58.9	20.0	True
J-135	Zone-1	826.0	956.4	3.28	True	6,008.76	56.4	20.0	True
J-141	Zone-1	810.0	954.7	7.37	True	6,600.59	62.6	20.0	True
J-142	Zone-1	814.0	954.7	1.18	True	7,239.42	60.9	25.5	True
J-143	Zone-1	816.0	953.0	0.53	True	7,152.01	59.3	24.4	True
J-144	Zone-1	818.0	955.0	1.05	True	1,415.54	59.3	39.5	True
J-145	Zone-1	859.0	955.0	0.79	True	738.45	41.5	21.7	True
J-146	Zone-1	820.0	950.4	0.39	True	7,741.44	56.4	25.6	True
J-147	Zone-1	819.0	950.1	0.00	True	8,198.97	56.7	21.8	True
J-148	Zone-1	850.0	948.6	0.00	True	7,566.65	42.7	20.0	True
J-149	Zone-1	813.0	953.9	1.31	True	5,083.29	61.0	20.0	True
J-150	Zone-1	812.0	951.7	1.97	True	4,356.66	60.4	20.0	True
J-151	Zone-1	805.0	949.9	0.00	True	1,170.73	62.7	20.0	True
J-152	Zone-1	808.0	949.9	0.00	True	1,312.24	61.4	20.0	True
J-153	Zone-1	799.0	949.8	32.28	True	1,888.52	65.2	21.7	True
J-154	Zone-1	787.0	949.8	0.00	True	2,113.28	70.4	26.9	True
J-155	Zone-1	785.0	949.8	0.00	True	2,685.06	71.3	27.8	True
J-156	Zone-1	782.0	949.8	32.28	True	2,367.30	72.6	20.0	True
J-157	Zone-1	799.0	949.8	32.28	True	3,644.13	65.2	20.0	True
J-158	Zone-1	801.0	950.0	0.66	True	4,246.29	64.5	22.8	True
J-159	Zone-1	802.0	949.7	0.00	True	3,384.74	63.9	20.0	True
J-160	Zone-1	807.0	950.2	0.53	True	4,834.84	62.0	20.0	True
J-161	Zone-1	830.0	949.9	0.39	True	4,492.73	51.9	20.0	True
J-162	Zone-1	835.0	949.9	0.66	True	4,369.35	49.7	20.0	True
J-164	Zone-1	847.0	949.9	0.79	True	4,760.84	44.5	20.0	True
J-165	Zone-1	845.0	949.5	1.18	True	4,337.45	45.2	22.4	True
J-166	Zone-1	825.0	949.7	0.75	True	3,586.36	54.0	20.0	True

	Zone-1	817.0	949.5	0.79	True	3,355.47	57.3	20.0	True
J-168	Zone-1	815.0	949.5	0.79	True	3,329.13	58.2	20.0	True
J-169	Zone-1	810.0	949.5	0.53	True	3,486.28	60.4	20.0	True
J-170	Zone-1	800.0	949.7	0.00	True	3,294.86	64.8	22.2	True
J-171	Zone-1	802.0	949.7	32.28	True	2,665.75	63.9	21.3	True
J-172	Zone-1	800.0	949.7	1.24	True	2,007.34	64.8	22.2	True
J-173	Zone-1	805.0	949.7	0.00	True	1,747.55	62.6	20.0	True
J-174	Zone-1	830.0	949.5	11.03	True	2,973.60	51.7	20.0	True
J-175	Zone-1	843.0	949.4	1.84	True	2,659.52	46.0	20.0	True
J-176	Zone-1	835.0	949.4	1.05	True	2,737.96	49.5	20.0	True
J-177	Zone-1	820.0	949.4	1.18	True	2,976.73	56.0	20.0	True
J-178	Zone-1	822.0	949.2	1.44	True	2,545.53	55.0	20.0	True
J-179	Zone-1	851.0	949.0	0.66	True	2,123.95	42.4	20.0	True
J-180	Zone-1	819.0	949.1	1.84	True	1,999.20	56.3	23.2	True
J-181	Zone-1	819.0	949.1	0.53	True	1,730.70	56.3	20.0	True
J-183	Zone-1	841.0	949.1	0.79	True	1,544.29	46.8	20.0	True
J-184	Zone-1	837.0	949.1	1.14	True	1,846.51	48.5	20.1	True
J-185	Zone-1	857.0	949.0	0.53	True	1,987.82	39.8	20.0	True
J-186	Zone-1	860.0	949.2	1.05	True	3,910.86	38.6	20.0	True
J-187	Zone-1	862.0	949.0	1.05	True	3,900.78	37.6	20.0	True
J-188	Zone-1	861.0	949.0	0.00	True	2,369.38	38.1	20.0	True
J-189	Zone-1	868.0	948.8	1.33	True	3,706.94	34.9	20.0	True
J-190	Zone-1	863.0	949.0	0.53	True	2,239.14	37.2	20.0	True
J-191	Zone-1	862.0	948.2	0.00	True	2,599.84	37.3	20.0	True
J-192	Zone-1	861.0	947.7	0.66	True	7,575.14	37.5	21.1	True
J-197	Zone-1	855.0	950.0	0.66	True	525.06	41.1	20.5	True
J-198	Zone-1	856.0	950.0	0.53	False	324.24	40.7	20.0	True
J-199	Zone-1	867.0	948.0	1.28	True	5,003.48	35.0	20.0	True
J-200	Zone-1	868.0	948.1	0.00	True	4,404.68	34.7	20.0	True
J-201	Zone-1	865.0	948.2	0.00	True	3,605.74	36.0	20.0	True
J-202	Zone-1	818.0	1,023.1	0.92	True	4,414.40	88.7	21.1	True
J-203	Zone-1	820.5	1,023.1	1.31	True	3,218.85	87.6	20.0	True
J-205	Zone-1	812.0	972.2	2.48	True	4,989.41	69.3	20.0	True
J-206	Zone-1	827.0	965.0	4.29	True	4,741.57	59.7	20.0	True
J-207	Zone-1	845.0	983.6	0.13	True	1,960.98	60.0	25.6	True
J-208	Zone-1	845.0	961.7	0.79	True	6,181.73	50.5	20.0	True
J-211	Zone-1	764.5	1,028.2	3.71	True	3,330.02	114.1	20.0	True
J-212	Zone-1	760.5	1,031.7	0.00	True	2,875.59	117.3	20.0	True
J-213	Zone-1	758.0	1,033.7	3.71	True	3,151.69	119.3	20.0	True
J-214	Zone-1	759.5	1,036.2	0.00	True	4,883.42	119.7	53.3	True
J-215	Zone-1	765.0	1,033.9	1.24	True	4,444.11	116.3	42.6	True
J-216	Zone-1	779.0	1,023.6	0.00	True	4,272.69	105.8	35.3	True
J-217	Zone-1	763.0	1,023.6	0.00	True	3,731.55	112.7	23.0	True
J-218	Zone-1	770.0	1,023.6	2.48	True	3,186.29	109.7	20.0	True
J-219	Zone-1	767.0	1,023.6	0.00	True	2,815.89	111.0	20.0	True
J-220	Zone-1	760.0	1,023.6	4.95	True	2,382.88	114.0	20.0	True
J-222	Zone-1	821.0	1,040.6	0.00	True	5,615.43	95.0	29.1	True
J-223	Zone-1	818.0	1,025.5	0.00	True	5,205.45	89.8	20.9	True
J-224	Zone-1	819.0	1,029.9	0.00	True	5,738.13	91.2	23.9	True
J-225	Zone-1	828.0	1,029.9	1.63	True	2,306.55	87.3	20.0	True
J-226	Zone-1	818.0	1,026.3	0.00	True	5,418.14	90.1	24.3	True
J-227	Zone-1	821.0	1,026.3	0.39	True	3,155.01	88.8	23.0	True
J-228	Zone-1	828.0	1,026.3	0.53	True	2,252.05	85.8	20.0	True
J-229	Zone-1	819.5	1,017.5	0.13	True	6,181.84	85.7	20.5	True
J-230	Zone-1	819.0	1,018.4	0.00	True	6,107.39	86.3	20.4	True
J-231	Zone-1	819.0	1,018.4	0.18	True	5,993.67	86.3	20.0	True
J-232	Zone-1	865.0	980.4	0.53	True	1,622.42	49.9	20.4	True
J-237	Zone-1	820.0	956.0	1.18	True	1,438.01	58.8	37.8	True
J-238	Zone-1	852.0	956.2	0.92	True	1,256.27	45.1	27.2	True
J-239	Zone-1	861.0	956.3	0.26	True	1,133.08	41.2	28.5	True
J-240	Zone-1	859.0	956.3	0.66	True	1,098.17	42.1	20.0	True
J-241	Zone-1	860.0	956.4	0.53	True	1,048.61	41.7	32.8	True
J-242	Zone-1	825.0	956.0	0.79	True	1,419.32	56.7	24.3	True
J-243	Zone-1	835.0	956.0	1.05	True	987.19	52.3	20.0	True
J-245	Zone-1	824.0	955.9	0.00	True	772.78	57.1	30.5	True
J-246	Zone-1	835.0	955.9	0.26	True	772.80	52.3	23.9	True
J-247	Zone-1	840.0	955.9	0.53	True	762.93	50.1	20.0	True
J-250	Zone-1	839.0	955.9	0.26	True	667.46	50.6	30.4	True
J-251	Zone-1	863.0	955.9	0.39	False	479.97	40.2	20.0	True
J-254	Zone-1	843.0	955.9	0.66	True	551.76	48.8	26.6	True
J-255	Zone-1	863.0	955.0	0.00	True	721.55	39.8	20.0	True
J-256	Zone-1	843.0	950.0	0.53	True	4,196.46	46.3	25.6	True
J-259	Zone-1	803.0	949.8	0.26	True	1,772.43	63.5	20.0	True
J-260	Zone-1	800.0	949.9	0.00	True	4,071.48	64.9	23.5	True
J-269	Zone-1	763.0	1,039.2	0.92	True	5,541.20	119.5	53.7	True
J-272	Zone-1	819.0	1,040.9	0.00	True	6,280.49	96.0	39.7	True
J-274	Zone-1	772.0	1,039.2	0.00	True	2,997.57	115.6	20.5	True
J-275	Zone-1	790.0	1,039.2	0.00	True	2,997.57	107.8	20.0	True
J-278	Zone-1	770.0	1,039.2	0.00	True	3,461.06	116.5	28.7	True
J-279	Zone-1	890.0	956.4	0.00	True	1,036.88	28.7	20.0	True
J-280	Zone-1	820.0	1,042.7	0.00	True	6,421.86	96.4	42.2	True
J-281	Zone-1	770.0	1,039.2	0.00	True	4,577.26	116.5	28.7	True

	Zone-1	780.0	1,039.2	2.16	True	2,834.47	112.1	22.6	True
J-284	Zone-1	830.0	1,006.5	0.13	True	5,206.34	76.3	20.0	True
J-285	Zone-1	790.0	1,039.2	0.00	True	2,609.60	107.8	20.0	True
J-286	Zone-1	790.0	1,039.2	0.00	True	2,655.71	107.8	20.0	True
J-287	Zone-1	790.0	1,039.2	0.00	True	3,125.69	107.8	20.0	True
J-290	Zone-1	846.0	949.7	1.14	True	4,651.93	44.9	20.0	True
J-291	Zone-1	848.0	982.9	0.79	True	1,970.30	58.4	25.4	True
J-292	Zone-1	863.0	983.2	0.00	True	1,730.10	52.0	20.0	True
J-293	Zone-1	860.0	983.3	0.00	True	1,776.34	53.4	20.0	True
J-294	Zone-1	824.0	1,040.6	0.00	True	3,143.01	93.7	20.0	True
J-295	Zone-1	816.0	1,023.8	0.36	True	5,870.10	89.9	20.0	True
J-297	Zone-1	885.0	956.5	0.00	True	1,148.41	30.9	20.6	True
J-297	Zone-2	895.0	1,010.9	0.26	True	729.54	50.2	20.0	True
J-298	Zone-2	897.0	(N/A)	(N/A)	(N/A)	(N/A)	(N/A)	(N/A)	False
J-299	Zone-1	840.0	985.8	0.00	True	2,178.54	63.1	22.2	True
J-300	Zone-1	845.0	985.8	0.18	True	1,904.28	60.9	20.0	True
J-301	Zone-2	895.0	1,111.4	0.00	True	2,200.23	93.6	22.6	True
J-302	Zone-1	846.0	980.4	0.26	True	1,016.68	58.1	20.0	True
J-303	Zone-1	840.0	980.4	0.39	True	1,016.72	60.7	21.8	True
J-304	Zone-1	795.5	949.8	32.28	True	3,508.56	66.8	23.3	True
J-305	Zone-1	800.0	949.7	32.28	True	1,201.44	64.8	20.0	True
J-308	Zone-1	786.0	1,039.2	0.00	True	1,985.37	109.5	20.0	True
J-309	Zone-1	783.2	1,039.2	0.00	True	2,878.95	110.8	21.4	True
J-310	Zone-1	785.5	1,039.2	0.66	True	2,914.22	109.7	20.8	True
J-311	Zone-1	782.2	1,039.2	0.00	True	2,997.57	111.2	20.2	True
J-312	Zone-1	783.0	1,039.2	1.31	True	2,099.35	110.8	20.0	True
J-313	Zone-1	782.0	1,039.2	0.79	True	1,909.97	111.3	20.0	True
J-314	Zone-1	780.0	1,039.2	0.00	True	1,897.63	112.1	20.0	True
J-315	Zone-1	812.9	1,041.5	0.00	True	6,297.82	98.9	45.4	True
J-316	Zone-1	817.7	988.3	0.00	True	5,305.37	73.8	20.0	True
J-317	Zone-1	878.0	1,026.4	0.00	True	3,539.67	64.2	20.0	True
J-318	Zone-1	800.0	1,026.3	0.00	True	3,595.77	97.9	52.1	True
J-319	Zone-1	805.0	1,026.3	0.00	True	3,667.24	95.7	47.9	True
J-320	Zone-1	811.4	1,026.2	0.00	True	3,695.17	92.9	44.4	True
J-321	Zone-1	808.0	1,026.3	0.00	True	3,534.87	94.4	20.0	True
J-322	Zone-1	826.0	980.4	0.00	True	1,016.69	66.8	25.1	True
J-323	<None>	812.2	962.5	0.00	True	3,944.04	65.0	20.0	True

R:\Hydraulic Analysis\Zillah\13033\13033 Zillah Hydraulic Analysis.wtg

Scenario: 2011 Max Day Fire Flow
Current Time Step: 0.000Hr
FlexTable: Tank Table

Label	Zone	Diameter (ft)	Elevation (Base) (ft)	Elevation (Minimum) (ft)	Elevation (Initial) (ft)	Elevation (Maximum) (ft)	Flow (Out net) (gpm)	Hydraulic Grade (ft)	Status (Calculated)
T-1	Zone-1	22.00	873.9	950.5	952.5	976.9	-1,818.81	952.5	Filling
T-2	Zone-1	35.83	868.6	922.6	947.5	972.6	-973.76	947.5	Filling
T-4	Zone-1	60.00	821.0	821.0	849.5	850.0	1,854.12	849.5	Emptying

R:\Hydraulic Analysis\Zillah\13033\13033 Zillah Hydraulic Analysis.wtg

Scenario: 2011 Max Day Fire Flow
Current Time Step: 0.000Hr
FlexTable: Pump Table

Label	Elevation (ft)	Pump Definition	Status (Initial)	Hydraulic Grade (Suction) (ft)	Hydraulic Grade (Discharge) (ft)	Flow (Total) (gpm)	Pump Head (ft)	Zone
PMP-2	895.0	ALTEEJAN BOOSTER PUMP max day	On	956.4	1,111.4	2.72	155.00	Zone-2
PMP-3	820.0	Cutler Way Booster Pump Future	On	848.7	1,044.1	1,854.12	195.45	Zone-1

R:\Hydraulic Analysis\Zillah\13033\13033 Zillah Hydraulic Analysis.wtg

Scenario: 2019 MD FF
Current Time Step: 0.000Hr
FlexTable: Pipe Table

Label	Length (Scaled) (ft)	Diameter (in)	Material	Hazen-Williams C	Flow (gpm)	Velocity (ft/s)	Status (Initial)
P-6	818	6.0	Ductile Iron	110.0	93.61	1.06	Open
P-9	155	8.0	Ductile Iron	120.0	3.76	0.02	Open
P-10	165	8.0	Ductile Iron	120.0	2.75	0.02	Open
P-11	281	8.0	Ductile Iron	120.0	4.71	0.03	Open
P-12	297	8.0	Ductile Iron	120.0	3.12	0.02	Open
P-13	382	8.0	Ductile Iron	120.0	1.96	0.01	Open
P-16	359	8.0	Ductile Iron	110.0	2.72	0.02	Open
P-17	131	8.0	Ductile Iron	120.0	368.78	2.35	Open
P-18	298	8.0	Ductile Iron	120.0	-30.24	0.19	Open
P-19	373	8.0	Ductile Iron	120.0	320.90	2.05	Open
P-20	781	8.0	Ductile Iron	120.0	-559.34	3.57	Open
P-22	883	8.0	Ductile Iron	120.0	-586.30	3.74	Open
P-23	335	8.0	Ductile Iron	120.0	-247.12	1.58	Open
P-25	486	6.0	Ductile Iron	110.0	213.32	2.42	Open
P-26	253	6.0	Ductile Iron	110.0	212.60	2.41	Open
P-27	650	6.0	Ductile Iron	110.0	106.21	1.21	Open
P-28	256	6.0	Ductile Iron	110.0	104.62	1.19	Open
P-29	476	6.0	Ductile Iron	110.0	122.07	1.39	Open
P-30	216	6.0	Ductile Iron	110.0	-109.08	1.24	Open
P-31	224	6.0	Ductile Iron	110.0	-191.96	2.18	Open
P-32	191	6.0	Ductile Iron	110.0	-167.42	1.90	Open
P-33	281	6.0	Ductile Iron	110.0	-371.54	4.22	Open
P-34	251	6.0	Ductile Iron	110.0	103.72	1.18	Open
P-35	326	6.0	Ductile Iron	110.0	-44.95	0.51	Open
P-36	190	6.0	Ductile Iron	110.0	148.03	1.68	Open
P-37	370	6.0	Ductile Iron	110.0	25.30	0.29	Open
P-38	231	6.0	Ductile Iron	110.0	121.98	1.38	Open
P-39	424	6.0	Ductile Iron	110.0	102.62	1.16	Open
P-40	224	6.0	Ductile Iron	110.0	18.47	0.21	Open
P-41	200	8.0	Ductile Iron	120.0	-1.36	0.01	Open
P-44	230	8.0	Ductile Iron	120.0	-163.44	1.04	Open
P-45	220	8.0	Ductile Iron	120.0	-163.59	1.04	Open
P-47	418	8.0	Ductile Iron	120.0	-550.02	3.51	Open
P-48	306	8.0	Ductile Iron	110.0	158.16	1.01	Open
P-49	207	8.0	Ductile Iron	120.0	535.84	3.42	Open
P-50	429	6.0	Ductile Iron	110.0	-170.71	1.94	Open
P-51	302	8.0	Ductile Iron	120.0	705.51	4.50	Open
P-52	209	8.0	Ductile Iron	120.0	203.75	1.30	Open
P-53	373	8.0	Ductile Iron	120.0	203.03	1.30	Open
P-54	370	8.0	Ductile Iron	120.0	202.45	1.29	Open
P-55	137	8.0	Ductile Iron	120.0	199.02	1.27	Open
P-56	164	6.0	Ductile Iron	110.0	-1.16	0.01	Open
P-57	311	8.0	Ductile Iron	120.0	499.96	3.19	Open
P-58	341	6.0	Ductile Iron	110.0	-160.75	1.82	Open
P-59	350	8.0	Ductile Iron	120.0	-813.44	5.19	Open
P-60	391	8.0	Ductile Iron	120.0	650.21	4.15	Open
P-61	351	8.0	Ductile Iron	120.0	162.26	1.04	Open
P-62	209	8.0	Ductile Iron	120.0	-417.20	2.66	Open
P-63	484	8.0	Ductile Iron	120.0	0.79	0.01	Open
P-64	288	6.0	Ductile Iron	110.0	-0.23	0.00	Open
P-65	460	8.0	Ductile Iron	120.0	418.82	2.67	Open
P-66	335	8.0	Ductile Iron	120.0	806.23	5.15	Open
P-67	249	8.0	Ductile Iron	120.0	249.62	1.59	Open
P-68	311	8.0	Ductile Iron	120.0	248.75	1.59	Open
P-69	423	8.0	Ductile Iron	120.0	543.41	3.47	Open
P-70	158	8.0	Ductile Iron	120.0	542.05	3.46	Open

P-72	1,296	8.0	Ductile Iron	110.0	856.30	5.47	Open
P-77	283	6.0	Ductile Iron	110.0	141.84	1.61	Open
P-78	436	8.0	Ductile Iron	110.0	697.98	4.46	Open
P-79	331	8.0	Ductile Iron	110.0	697.98	4.46	Open
P-81	426	8.0	Ductile Iron	120.0	629.22	4.02	Open
P-82	748	8.0	Ductile Iron	120.0	623.62	3.98	Open
P-83	354	8.0	Ductile Iron	120.0	612.71	3.91	Open
P-87	357	8.0	Ductile Iron	120.0	149.09	0.95	Open
P-88	278	8.0	Ductile Iron	120.0	1.33	0.01	Open
P-90	360	8.0	Ductile Iron	120.0	1.01	0.01	Open
P-96	247	6.0	Ductile Iron	110.0	147.32	1.67	Open
P-97	395	6.0	Ductile Iron	110.0	146.02	1.66	Open
P-98	497	6.0	Ductile Iron	110.0	143.71	1.63	Open
P-99	240	6.0	Ductile Iron	110.0	142.55	1.62	Open
P-100	213	6.0	Ductile Iron	110.0	142.55	1.62	Open
P-101	217	6.0	Ductile Iron	110.0	-276.34	3.14	Open
P-102	275	6.0	Ductile Iron	110.0	-276.57	3.14	Open
P-103	113	6.0	Ductile Iron	110.0	-77.55	0.88	Open
P-104	224	6.0	Ductile Iron	110.0	418.89	4.75	Open
P-105	64	6.0	Ductile Iron	110.0	666.92	7.57	Open
P-106	394	8.0	Ductile Iron	110.0	28.83	0.18	Open
P-107	414	8.0	Ductile Iron	120.0	636.87	4.06	Open
P-108	242	6.0	Ductile Iron	110.0	140.60	1.60	Open
P-109	279	6.0	Ductile Iron	110.0	140.02	1.59	Open
P-110	311	6.0	Ductile Iron	110.0	138.86	1.58	Open
P-111	240	6.0	Ductile Iron	110.0	262.17	2.97	Open
P-112	51	6.0	Ductile Iron	110.0	623.06	7.07	Open
P-114	346	8.0	Ductile Iron	110.0	-0.10	0.00	Open
P-115	296	8.0	Ductile Iron	110.0	2.81	0.02	Open
P-116	396	6.0	Ductile Iron	110.0	2.81	0.03	Open
P-117	247	6.0	Ductile Iron	110.0	2.81	0.03	Open
P-118	321	6.0	Ductile Iron	110.0	1.30	0.01	Open
P-122	291	8.0	Ductile Iron	120.0	551.07	3.52	Open
P-123	345	8.0	Ductile Iron	120.0	123.89	0.79	Open
P-124	86	8.0	Ductile Iron	120.0	427.19	2.73	Open
P-125	275	8.0	Ductile Iron	120.0	362.48	2.31	Open
P-126	284	8.0	Ductile Iron	120.0	362.48	2.31	Open
P-127	428	8.0	Ductile Iron	120.0	63.98	0.41	Open
P-128	472	8.0	Ductile Iron	120.0	-55.23	0.35	Open
P-129	501	8.0	Ductile Iron	120.0	-569.58	3.64	Open
P-130	146	8.0	Ductile Iron	120.0	510.87	3.26	Open
P-131	82	8.0	Ductile Iron	120.0	967.10	6.17	Open
P-132	82	8.0	Ductile Iron	120.0	1,030.33	6.58	Open
P-133	227	8.0	Ductile Iron	120.0	799.47	5.10	Open
P-134	184	8.0	Ductile Iron	120.0	798.89	5.10	Open
P-135	90	8.0	Ductile Iron	120.0	400.00	2.55	Open
P-136	78	8.0	Ductile Iron	120.0	939.38	6.00	Open
P-137	328	8.0	Ductile Iron	120.0	-539.38	3.44	Open
P-138	234	6.0	Ductile Iron	110.0	-63.49	0.72	Open
P-139	211	6.0	Ductile Iron	110.0	-63.92	0.73	Open
P-140	214	6.0	Ductile Iron	110.0	-63.92	0.73	Open
P-141	190	6.0	Ductile Iron	110.0	-64.65	0.73	Open
P-142	231	6.0	Ductile Iron	110.0	-230.00	2.61	Open
P-143	380	6.0	Ductile Iron	110.0	164.63	1.87	Open
P-144	270	6.0	Ductile Iron	110.0	168.46	1.91	Open
P-145	789	6.0	Ductile Iron	110.0	-15.18	0.17	Open
P-152	258	8.0	Ductile Iron	120.0	-607.29	3.88	Open
P-153	356	8.0	Ductile Iron	120.0	-613.16	3.91	Open
P-154	360	8.0	Ductile Iron	120.0	-384.10	2.45	Open
P-155	306	6.0	Ductile Iron	110.0	-2.75	0.03	Open
P-156	128	8.0	Ductile Iron	120.0	-550.00	3.51	Open
P-157	232	8.0	Ductile Iron	120.0	93.78	0.60	Open
P-158	368	8.0	Ductile Iron	120.0	244.82	1.56	Open
P-159	326	8.0	Ductile Iron	120.0	241.32	1.54	Open
P-160	28	8.0	Ductile Iron	120.0	-151.47	0.97	Open
P-162	318	8.0	Ductile Iron	120.0	-152.34	0.97	Open
P-163	257	8.0	Ductile Iron	120.0	72.18	0.46	Open

	307	8.0	Ductile Iron	120.0	215.92	1.38	Open
P-165	372	8.0	Ductile Iron	120.0	108.00	0.69	Open
P-166	304	4.0	Ductile Iron	110.0	71.94	1.84	Open
P-167	380	8.0	Ductile Iron	120.0	-496.37	3.17	Open
P-170	797	8.0	Ductile Iron	120.0	563.94	3.60	Open
P-171	215	8.0	Ductile Iron	120.0	396.76	2.53	Open
P-172	560	8.0	Ductile Iron	120.0	395.31	2.52	Open
P-173	215	8.0	Ductile Iron	120.0	597.10	3.81	Open
P-174	162	8.0	Ductile Iron	120.0	754.87	4.82	Open
P-175	837	6.0	Ductile Iron	110.0	64.99	0.74	Open
P-176	525	6.0	Ductile Iron	110.0	221.54	2.51	Open
P-177	371	6.0	Ductile Iron	110.0	-158.00	1.79	Open
P-178	487	6.0	Ductile Iron	110.0	-181.05	2.05	Open
P-179	525	6.0	Ductile Iron	110.0	141.78	1.61	Open
P-182	291	6.0	Ductile Iron	110.0	139.03	1.58	Open
P-183	261	6.0	Ductile Iron	110.0	138.31	1.57	Open
P-184	185	8.0	Ductile Iron	120.0	689.30	4.40	Open
P-185	91	10.0	Ductile Iron	120.0	526.09	2.15	Open
P-186	497	10.0	Ductile Iron	120.0	526.09	2.15	Open
P-187	381	10.0	Ductile Iron	120.0	526.09	2.15	Open
P-188	441	12.0	Ductile Iron	120.0	297.65	0.84	Open
P-190	643	12.0	Ductile Iron	120.0	-298.37	0.85	Open
P-191	416	12.0	Ductile Iron	120.0	-299.78	0.85	Open
P-192	587	12.0	Ductile Iron	120.0	-67.51	0.19	Open
P-193	64	6.0	Ductile Iron	110.0	-67.51	0.77	Open
P-194	609	6.0	Ductile Iron	110.0	-67.51	0.77	Open
P-195	70	6.0	Ductile Iron	110.0	232.27	2.64	Open
P-197	303	8.0	Ductile Iron	110.0	0.72	0.00	Open
P-199	230	8.0	Ductile Iron	120.0	-52.98	0.34	Open
P-201	157	8.0	Ductile Iron	120.0	-53.70	0.34	Open
P-202	484	8.0	Ductile Iron	120.0	-112.49	0.72	Open
P-203	130	8.0	Ductile Iron	120.0	279.92	1.79	Open
P-204	381	8.0	Ductile Iron	120.0	393.14	2.51	Open
P-205	751	4.0	Ductile Iron	110.0	15.03	0.38	Open
P-206	313	6.0	Ductile Iron	110.0	58.36	0.66	Open
P-207	354	6.0	Ductile Iron	110.0	49.08	0.56	Open
P-208	341	6.0	Ductile Iron	110.0	25.23	0.29	Open
P-209	297	6.0	Ductile Iron	110.0	22.84	0.26	Open
P-210	522	6.0	Ductile Iron	110.0	19.97	0.23	Open
P-211	148	6.0	Ductile Iron	110.0	2.00	0.02	Open
P-212	505	6.0	Ductile Iron	110.0	23.41	0.27	Open
P-213	176	6.0	Ductile Iron	110.0	-21.99	0.25	Open
P-214	69	6.0	Ductile Iron	110.0	-7.25	0.08	Open
P-215	234	8.0	Ductile Iron	120.0	79.03	0.50	Open
P-216	507	8.0	Ductile Iron	120.0	43.37	0.28	Open
P-218	478	8.0	Ductile Iron	120.0	-60.36	0.39	Open
P-220	155	8.0	Ductile Iron	110.0	45.96	0.29	Open
P-222	255	8.0	Ductile Iron	120.0	10.15	0.06	Open
P-223	398	8.0	Ductile Iron	120.0	10.15	0.06	Open
P-224	384	8.0	Ductile Iron	120.0	66.09	0.42	Open
P-226	670	6.0	Ductile Iron	110.0	13.54	0.15	Open
P-227	231	6.0	Ductile Iron	110.0	26.64	0.30	Open
P-228	415	10.0	Ductile Iron	120.0	205.07	0.84	Open
P-229	737	6.0	Ductile Iron	110.0	-29.01	0.33	Open
P-230	277	6.0	Ductile Iron	110.0	-4.39	0.05	Open
P-231	288	6.0	Ductile Iron	110.0	14.43	0.16	Open
P-232	297	6.0	Ductile Iron	110.0	36.25	0.41	Open
P-233	933	6.0	Ductile Iron	110.0	29.45	0.33	Open
P-234	272	6.0	Ductile Iron	110.0	29.64	0.34	Open
P-235	192	6.0	Ductile Iron	110.0	8.54	0.10	Open
P-236	312	10.0	Ductile Iron	120.0	-232.92	0.95	Open
P-237	333	10.0	Ductile Iron	120.0	240.02	0.98	Open
P-239	244	6.0	Ductile Iron	110.0	-61.22	0.69	Open
P-240	407	6.0	Ductile Iron	110.0	-21.10	0.24	Open
P-241	272	6.0	Ductile Iron	110.0	-40.71	0.46	Open
P-242	415	6.0	Ductile Iron	110.0	0.91	0.01	Open
P-243	314	6.0	Ductile Iron	110.0	-42.20	0.48	Open

	193	6.0	Ductile Iron	110.0	-16.73	0.19	Open
P-245	625	6.0	Ductile Iron	110.0	-17.60	0.20	Open
P-246	480	6.0	Ductile Iron	110.0	-27.02	0.31	Open
P-248	378	6.0	Ductile Iron	110.0	14.41	0.16	Open
P-249	308	6.0	Ductile Iron	110.0	-5.21	0.06	Open
P-253	222	6.0	Ductile Iron	110.0	-248.49	2.82	Open
P-254	394	6.0	Ductile Iron	110.0	239.47	2.72	Open
P-255	363	8.0	Ductile Iron	120.0	42.00	0.27	Open
P-256	319	6.0	Ductile Iron	110.0	-252.57	2.87	Open
P-257	407	6.0	Ductile Iron	110.0	-256.66	2.91	Open
P-258	381	8.0	Ductile Iron	120.0	587.66	3.75	Open
P-259	337	8.0	Ductile Iron	120.0	586.30	3.74	Open
P-260	577	6.0	Ductile Iron	110.0	252.57	2.87	Open
P-261	217	8.0	Ductile Iron	120.0	-561.84	3.59	Open
P-262	293	8.0	Ductile Iron	120.0	8.17	0.05	Open
P-263	231	8.0	Ductile Iron	120.0	8.17	0.05	Open
P-264	264	8.0	Ductile Iron	120.0	5.45	0.03	Open
P-265	505	8.0	Ductile Iron	120.0	5.45	0.03	Open
P-266	519	8.0	Ductile Iron	120.0	-570.01	3.64	Open
P-267	1,780	10.0	Ductile Iron	120.0	-35.52	0.15	Open
P-268	220	10.0	Ductile Iron	120.0	-35.52	0.15	Open
P-270	120	10.0	Ductile Iron	120.0	1.45	0.01	Open
P-271	230	6.0	Ductile Iron	110.0	-1.45	0.02	Open
P-272	1,307	10.0	Ductile Iron	120.0	1,221.39	4.99	Open
P-273	708	10.0	Ductile Iron	120.0	926.78	3.79	Open
P-274	990	8.0	Ductile Iron	120.0	3.16	0.02	Open
P-275	167	10.0	Ductile Iron	120.0	925.77	3.78	Open
P-276	410	8.0	Ductile Iron	120.0	1.01	0.01	Open
P-277	580	8.0	Ductile Iron	120.0	0.58	0.00	Open
P-278	27	8.0	Ductile Iron	120.0	399.01	2.55	Open
P-280	252	10.0	Ductile Iron	120.0	-739.42	3.02	Open
P-282	656	10.0	Ductile Iron	120.0	-1,111.41	4.54	Open
P-284	23	8.0	Ductile Iron	120.0	371.70	2.37	Open
P-285	121	8.0	Ductile Iron	120.0	371.50	2.37	Open
P-286	790	2.0	Ductile Iron	110.0	2.57	0.26	Open
P-288	123	8.0	Ductile Iron	120.0	1.56	0.01	Open
P-295	227	6.0	Ductile Iron	110.0	-119.32	1.35	Open
P-296	385	6.0	Ductile Iron	110.0	-122.64	1.39	Open
P-297	259	6.0	Ductile Iron	110.0	-123.65	1.40	Open
P-298	192	6.0	Ductile Iron	110.0	0.72	0.01	Open
P-299	152	6.0	Ductile Iron	110.0	-124.81	1.42	Open
P-300	140	6.0	Ductile Iron	110.0	2.02	0.02	Open
P-301	355	6.0	Ductile Iron	110.0	1.16	0.01	Open
P-304	332	8.0	Ductile Iron	120.0	0.87	0.01	Open
P-305	424	8.0	Ductile Iron	120.0	0.58	0.00	Open
P-309	100	6.0	Ductile Iron	110.0	139.76	1.59	Open
P-310	128	6.0	Ductile Iron	110.0	137.73	1.56	Open
P-313	143	6.0	Ductile Iron	110.0	0.72	0.01	Open
P-314	158	8.0	Ductile Iron	120.0	220.68	1.41	Open
P-317	411	8.0	Ductile Iron	120.0	162.77	1.04	Open
P-318	150	8.0	Ductile Iron	120.0	160.75	1.03	Open
P-319	204	8.0	Ductile Iron	110.0	-1.45	0.01	Open
P-320	257	8.0	Ductile Iron	120.0	-159.07	1.02	Open
P-323	174	8.0	Ductile Iron	120.0	-45.67	0.29	Open
P-324	341	8.0	Ductile Iron	120.0	-95.88	0.61	Open
P-325	490	8.0	Ductile Iron	110.0	45.96	0.29	Open
P-327	44	8.0	Ductile Iron	120.0	-264.18	1.69	Open
P-350	70	12.0	Ductile Iron	120.0	1,257.06	3.57	Open
P-372	337	8.0	Ductile Iron	120.0	1,138.29	7.27	Open
P-373	313	8.0	Ductile Iron	120.0	1,135.60	7.25	Open
P-376	550	8.0	Ductile Iron	120.0	145.87	0.93	Open
P-377	78	8.0	Ductile Iron	120.0	650.00	4.15	Open
P-378	375	12.0	Ductile Iron	120.0	-142.88	0.41	Open
P-379	110	12.0	Ductile Iron	120.0	2.99	0.01	Open
P-383	1,778	12.0	Ductile Iron	120.0	-844.32	2.40	Open
P-387	2,282	12.0	Ductile Iron	120.0	15.10	0.04	Open
P-395	508	8.0	Ductile Iron	120.0	-1.48	0.01	Open

	1,724	12.0	Ductile Iron	120.0	15.10	0.04	Open
P-397	1,521	8.0	Ductile Iron	120.0	1.48	0.01	Open
P-398	559	8.0	Ductile Iron	120.0	1.48	0.01	Open
P-399	580	12.0	Ductile Iron	120.0	-11.34	0.03	Open
P-400	1,232	12.0	Ductile Iron	120.0	-15.10	0.04	Open
P-404	92	12.0	Ductile Iron	120.0	2,117.49	6.01	Open
P-405	151	12.0	Ductile Iron	120.0	2,117.49	6.01	Open
P-409	325	10.0	Ductile Iron	120.0	212.86	0.87	Open
P-410	335	10.0	Ductile Iron	120.0	219.91	0.90	Open
P-411	285	6.0	Ductile Iron	110.0	-8.45	0.10	Open
P-412	427	8.0	Ductile Iron	120.0	-17.35	0.11	Open
P-413	1,247	6.0	Ductile Iron	110.0	-6.58	0.07	Open
P-414	219	6.0	Ductile Iron	110.0	140.05	1.59	Open
P-415	318	6.0	Ductile Iron	130.0	-0.87	0.01	Open
P-416	406	8.0	Ductile Iron	110.0	841.55	5.37	Open
P-418	184	12.0	Ductile Iron	120.0	357.98	1.02	Open
P-419	1,219	8.0	Ductile Iron	120.0	137.30	0.88	Open
P-420	851	10.0	Ductile Iron	120.0	-42.00	0.17	Open
P-421	251	6.0	Ductile Iron	110.0	121.57	1.38	Open
P-422	255	6.0	Ductile Iron	110.0	226.64	2.57	Open
P-423	639	8.0	Ductile Iron	120.0	-106.52	0.68	Open
P-424	245	8.0	Ductile Iron	120.0	-106.52	0.68	Open
P-425	639	8.0	Ductile Iron	120.0	-107.10	0.68	Open
P-428	331	10.0	Ductile Iron	120.0	924.18	3.78	Open
P-429	105	10.0	Ductile Iron	120.0	1,115.75	4.56	Open
P-430	774	6.0	Ductile Iron	110.0	191.97	2.18	Open
P-431	368	6.0	Ductile Iron	110.0	291.46	3.31	Open
P-432	151	8.0	Ductile Iron	120.0	-45.96	0.29	Open
P-436	282	6.0	Ductile Iron	110.0	1.07	0.01	Open
P-437	282	6.0	Ductile Iron	110.0	0.87	0.01	Open
P-440	193	8.0	Ductile Iron	120.0	-0.08	0.00	Open
P-441	413	8.0	Ductile Iron	120.0	-0.08	0.00	Open
P-442	504	6.0	Ductile Iron	110.0	145.87	1.66	Open
P-443	300	6.0	Ductile Iron	110.0	229.01	2.60	Open
P-444	242	6.0	Ductile Iron	110.0	228.81	2.60	Open
P-445	239	8.0	Ductile Iron	120.0	0.20	0.00	Open
P-447	60	12.0	Ductile Iron	120.0	2.99	0.01	Open
P-449	715	6.0	Ductile Iron	130.0	1.45	0.02	Open
P-450	290	10.0	Ductile Iron	130.0	1.16	0.00	Open
P-451	276	8.0	Ductile Iron	120.0	-55.94	0.36	Open
P-452	118	8.0	Ductile Iron	120.0	-122.33	0.78	Open
P-453	800	6.0	Ductile Iron	130.0	30.87	0.35	Open
P-456	339	6.0	Ductile Iron	130.0	1.16	0.01	Open
P-458	520	12.0	Ductile Iron	120.0	5.87	0.02	Open
P-459	727	12.0	Ductile Iron	120.0	12.81	0.04	Open
P-460	383	12.0	Ductile Iron	120.0	9.78	0.03	Open
P-461	425	12.0	Ductile Iron	120.0	0.00	0.00	Open
P-462	325	12.0	Ductile Iron	120.0	0.00	0.00	Open
P-463	289	6.0	Ductile Iron	130.0	2.46	0.03	Open
P-464	429	6.0	Ductile Iron	130.0	0.87	0.01	Open
P-465	456	6.0	Ductile Iron	130.0	0.00	0.00	Open
P-466	165	12.0	Ductile Iron	120.0	-1,257.06	3.57	Open
P-467	1,345	12.0	Ductile Iron	120.0	860.43	2.44	Open
P-468	156	12.0	Ductile Iron	130.0	2,117.49	6.01	Open
P-469	155	8.0	Ductile Iron	120.0	-703.56	4.49	Open
P-470	280	8.0	Ductile Iron	120.0	-545.40	3.48	Open
P-471	113	8.0	Ductile Iron	130.0	158.16	1.01	Open
P-472	119	12.0	Ductile Iron	130.0	0.00	0.00	Closed
P-473	266	12.0	Ductile Iron	130.0	259.32	0.74	Open
P-474	285	12.0	Ductile Iron	130.0	259.32	0.74	Open
P-475	370	12.0	Ductile Iron	130.0	259.32	0.74	Open
P-476	213	6.0	Ductile Iron	110.0	93.18	1.06	Open
P-477	677	6.0	Ductile Iron	110.0	352.49	4.00	Open
P-478	143	12.0	Ductile Iron	130.0	259.32	0.74	Open
P-479	349	8.0	Ductile Iron	130.0	0.00	0.00	Open
P-480	1,012	10.0	Ductile Iron	130.0	0.00	0.00	Open
P-481	471	8.0	Ductile Iron	130.0	-30.57	0.20	Open

	199	8.0	Ductile Iron	130.0	25.92	0.17	Open
P-483	60	12.0	Ductile Iron	120.0	2.99	0.01	Open
P-484	305	12.0	Ductile Iron	120.0	2.99	0.01	Open
P-486	61	6.0	Ductile Iron	130.0	(N/A)	(N/A)	Open
P-488	150	10.0	Ductile Iron	130.0	0.00	0.00	Open
P-489	70	6.0	Ductile Iron	130.0	(N/A)	(N/A)	Open
P-490	54	6.0	Ductile Iron	130.0	(N/A)	(N/A)	Open
P-491	52	6.0	Ductile Iron	130.0	(N/A)	(N/A)	Open
P-492	45	6.0	Ductile Iron	130.0	(N/A)	(N/A)	Open
P-493	44	6.0	Ductile Iron	130.0	(N/A)	(N/A)	Open
P-494	46	6.0	Ductile Iron	130.0	(N/A)	(N/A)	Open
P-495	60	6.0	Ductile Iron	130.0	(N/A)	(N/A)	Open
P-496	181	6.0	Ductile Iron	130.0	(N/A)	(N/A)	Open
P-497	48	6.0	Ductile Iron	130.0	(N/A)	(N/A)	Open
P-498	445	12.0	Ductile Iron	120.0	657.01	1.86	Open
P-499	397	8.0	Ductile Iron	120.0	657.01	4.19	Open

R:\Hydraulic Analysis\Zillah\13033\13033 Zillah Hydraulic Analysis.wtg

Scenario: 2019 MD FF
Current Time Step: 0.000Hr
Fire Flow Node FlexTable: Fire Flow Report

Label	Zone	Elevation (ft)	Hydraulic Grade (ft)	Demand (gpm)	Satisfies Fire Flow Constraints?	Fire Flow (Available) (gpm)	Pressure (psi)	Pressure (Calculated Residual) (psi)	Is Active?
H-2	<None>	0.0	(N/A)	(N/A)	(N/A)	(N/A)	(N/A)	(N/A)	False
H-3	<None>	0.0	(N/A)	(N/A)	(N/A)	(N/A)	(N/A)	(N/A)	False
H-4	<None>	0.0	(N/A)	(N/A)	(N/A)	(N/A)	(N/A)	(N/A)	False
H-5	<None>	0.0	(N/A)	(N/A)	(N/A)	(N/A)	(N/A)	(N/A)	False
H-6	<None>	0.0	(N/A)	(N/A)	(N/A)	(N/A)	(N/A)	(N/A)	False
H-7	<None>	0.0	(N/A)	(N/A)	(N/A)	(N/A)	(N/A)	(N/A)	False
H-8	<None>	0.0	(N/A)	(N/A)	(N/A)	(N/A)	(N/A)	(N/A)	False
H-9	<None>	0.0	(N/A)	(N/A)	(N/A)	(N/A)	(N/A)	(N/A)	False
H-10	<None>	0.0	(N/A)	(N/A)	(N/A)	(N/A)	(N/A)	(N/A)	False
H-11	<None>	0.0	(N/A)	(N/A)	(N/A)	(N/A)	(N/A)	(N/A)	False
J-1	Zone-1	855.0	962.6	-550.00	True	4,641.22	46.6	20.0	True
J-2	Zone-1	865.0	954.3	-400.00	True	4,659.81	38.6	20.0	True
J-3	Zone-1	818.0	984.9	-650.00	True	4,808.07	72.2	20.0	True
J-4	Zone-1	842.0	1,037.1	35.52	True	2,727.13	84.4	20.0	True
J-5	Zone-1	820.5	1,037.1	0.14	True	6,527.70	93.7	36.5	True
J-6	Zone-1	820.0	1,018.2	1.45	True	2,153.37	85.7	20.0	True
J-7	Zone-1	818.0	1,018.2	0.14	True	5,732.01	86.6	20.9	True
J-8	Zone-1	810.0	1,019.8	5.88	True	3,726.69	90.8	20.0	True
J-10	Zone-1	816.0	1,015.2	0.58	True	5,925.40	86.2	22.0	True
J-11	Zone-1	819.0	1,015.2	0.00	True	3,576.76	84.9	20.6	True
J-12	Zone-1	820.0	1,015.2	1.16	True	3,163.68	84.5	20.0	True
J-13	Zone-1	810.0	1,018.8	0.43	True	3,189.11	90.3	20.0	True
J-14	Zone-1	810.0	1,009.0	2.72	True	3,330.99	86.1	20.0	True
J-15	Zone-1	819.0	1,009.0	0.00	True	5,933.43	82.2	20.0	True
J-16	Zone-1	819.0	1,008.6	0.00	True	6,448.49	82.0	20.0	True
J-17	Zone-1	824.0	988.2	0.72	True	2,665.24	71.1	20.0	True
J-18	Zone-1	824.0	986.8	2.67	True	3,127.10	70.4	20.0	True
J-19	Zone-1	838.0	985.7	1.59	True	2,186.08	63.9	20.0	True
J-20	Zone-1	841.0	986.4	0.64	True	3,284.82	62.9	20.0	True
J-21	Zone-1	841.0	985.8	0.75	True	3,217.54	62.7	20.0	True
J-22	Zone-1	842.0	985.4	0.89	True	3,031.51	62.0	20.0	True
J-23	Zone-1	845.0	985.3	1.01	True	2,703.31	60.7	20.0	True
J-24	Zone-1	834.0	991.0	0.72	True	5,168.76	67.9	20.0	True
J-25	Zone-1	835.0	986.5	1.01	True	4,613.03	65.5	20.0	True
J-26	Zone-1	832.0	985.8	0.75	True	3,698.09	66.5	20.0	True
J-27	Zone-1	835.0	984.7	14.78	True	3,800.24	64.8	20.0	True
J-28	Zone-1	835.0	984.4	2.15	True	3,095.93	64.6	20.0	True
J-29	Zone-1	852.0	978.6	0.00	True	2,360.62	54.8	28.0	True
J-37	Zone-1	872.0	978.4	1.01	True	1,344.03	46.0	20.0	True
J-38	Zone-1	870.0	978.4	0.43	True	1,600.70	46.9	20.9	True
J-39	Zone-1	857.0	978.4	0.43	True	1,926.42	52.5	26.5	True
J-40	Zone-1	860.0	977.7	1.30	True	1,660.01	50.9	20.0	True
J-41	Zone-1	862.0	976.6	2.31	True	1,433.60	49.6	20.0	True
J-42	Zone-1	860.0	975.2	1.16	True	1,566.54	49.8	20.0	True
J-43	Zone-1	840.0	974.5	0.00	True	2,001.74	58.2	24.8	True
J-44	Zone-1	845.0	973.9	0.00	True	3,242.07	55.8	21.3	True
J-45	Zone-1	816.0	1,008.6	1.36	True	5,912.63	83.3	20.1	True
J-46	Zone-1	764.5	1,025.7	0.00	True	4,347.57	113.0	40.0	True
J-47	Zone-1	776.0	1,018.8	4.09	True	3,670.58	105.0	63.8	True
J-48	Zone-1	764.5	1,019.3	1.36	True	3,797.89	110.2	45.1	True
J-49	Zone-1	780.0	1,013.3	2.50	True	4,714.14	100.9	25.9	True
J-50	Zone-1	809.0	1,007.7	23.94	True	5,608.25	85.9	20.0	True
J-51	Zone-1	822.0	988.1	1.36	True	3,581.41	71.9	20.0	True
J-53	Zone-1	819.0	988.1	3.26	True	4,859.83	73.2	21.3	True
J-54	Zone-1	819.0	986.2	0.00	True	5,304.96	72.4	20.0	True
J-55	Zone-1	817.0	984.5	4.13	True	5,330.94	72.5	31.4	True
J-56	Zone-1	818.0	983.1	1.04	True	5,109.91	71.4	30.4	True
J-57	Zone-1	819.0	979.7	1.80	True	4,976.51	69.5	32.2	True
J-58	Zone-1	820.0	979.5	0.72	True	4,398.21	69.0	26.3	True
J-59	Zone-1	830.0	979.1	0.58	True	3,734.04	64.5	23.7	True
J-60	Zone-1	845.0	978.7	0.87	True	3,255.93	57.8	24.4	True
J-61	Zone-1	850.0	978.5	0.00	True	3,100.30	55.6	25.4	True
J-62	Zone-1	821.0	984.3	0.14	True	5,395.61	70.7	20.0	True
J-63	Zone-1	823.0	977.9	1.16	True	2,306.63	67.0	20.0	True
J-64	Zone-1	824.0	977.9	1.26	True	5,442.02	66.6	27.5	True
J-65	Zone-1	826.0	976.0	0.83	True	5,255.47	64.9	27.0	True
J-66	Zone-1	850.0	976.0	1.01	True	3,277.96	54.5	20.0	True
J-67	Zone-1	858.0	976.0	0.00	True	3,115.93	51.0	20.0	True
J-68	Zone-1	815.0	984.1	0.00	True	5,462.28	73.2	21.0	True
J-69	Zone-1	817.0	979.1	2.48	True	5,957.01	70.1	20.0	True

J-70	Zone-1	826.0	975.1	12.71	True	5,996.25	64.5	28.4	True
J-71	Zone-1	803.0	983.5	14.74	True	4,369.56	78.1	20.0	True
J-75	Zone-1	808.0	976.1	1.73	True	5,196.07	72.7	20.0	True
J-76	Zone-1	817.0	975.3	0.58	True	6,677.09	68.5	25.9	True
J-77	Zone-1	822.0	970.3	13.21	True	6,349.94	64.2	20.0	True
J-78	Zone-1	828.0	969.9	0.87	True	5,258.00	61.4	20.0	True
J-79	Zone-1	840.0	969.4	0.72	True	5,280.02	56.0	20.0	True
J-80	Zone-1	830.0	966.4	1.22	True	6,320.56	59.0	20.0	True
J-81	Zone-1	833.0	966.4	1.30	True	5,992.24	57.7	20.0	True
J-82	Zone-1	827.0	967.4	1.36	True	5,510.44	60.8	20.0	True
J-84	Zone-1	808.0	970.5	0.00	True	4,583.56	70.3	20.0	True
J-85	Zone-1	809.0	966.3	40.97	True	4,772.34	68.1	20.0	True
J-86	Zone-1	861.0	962.6	3.47	True	6,065.34	44.0	20.0	True
J-87	Zone-1	838.0	962.6	0.43	True	6,209.22	53.9	25.4	True
J-88	Zone-1	850.0	961.9	0.58	True	2,427.18	48.4	20.0	True
J-89	Zone-1	865.0	961.2	1.16	True	1,948.41	41.6	20.0	True
J-90	Zone-1	860.0	960.4	0.58	True	3,961.92	43.4	20.0	True
J-91	Zone-1	850.0	960.5	0.00	True	6,216.84	47.8	20.0	True
J-92	Zone-1	855.0	960.1	0.72	True	6,063.88	45.5	20.0	True
J-93	Zone-1	863.0	959.3	0.00	True	4,255.45	41.6	20.0	True
J-94	Zone-1	863.0	954.0	0.00	True	8,095.52	39.4	20.7	True
J-95	Zone-1	870.0	958.3	1.59	True	4,494.70	38.2	20.0	True
J-96	Zone-1	870.0	956.2	1.30	True	4,929.96	37.3	21.3	True
J-97	Zone-2	892.0	1,010.9	0.10	True	2,067.63	51.5	20.0	True
J-98	Zone-2	897.0	1,010.9	0.00	True	2,225.95	49.3	21.7	True
J-99	Zone-2	895.0	1,010.9	0.00	True	2,133.67	50.2	20.0	True
J-100	Zone-2	900.5	1,010.9	0.00	True	1,883.10	47.8	20.0	True
J-101	Zone-2	901.0	1,010.9	0.43	True	1,890.61	47.6	20.0	True
J-102	Zone-2	901.0	1,010.9	1.30	True	1,161.06	47.6	20.0	True
J-105	Zone-2	890.0	1,010.9	0.87	True	1,460.63	52.3	20.0	True
J-106	Zone-1	859.0	956.3	0.43	True	2,185.87	42.1	20.0	True
J-107	Zone-1	860.0	954.4	2.17	True	1,173.10	40.8	30.4	True
J-108	Zone-1	825.0	954.3	2.59	True	2,033.92	56.0	38.2	True
J-109	Zone-1	860.0	956.5	0.00	True	1,945.52	41.7	20.0	True
J-110	Zone-1	860.5	956.6	0.72	True	2,075.06	41.6	20.0	True
J-111	Zone-1	855.0	956.7	0.72	True	3,136.94	44.0	20.0	True
J-112	Zone-1	862.0	955.1	0.58	True	6,430.23	40.3	20.0	True
J-113	Zone-1	861.0	961.7	0.00	True	7,494.93	43.6	20.0	True
J-114	Zone-1	861.0	960.1	0.75	True	7,565.31	42.9	20.0	True
J-115	Zone-1	861.0	958.2	0.87	True	7,069.24	42.1	20.0	True
J-116	Zone-1	835.0	955.4	2.75	True	3,027.35	52.1	20.1	True
J-117	Zone-1	818.0	952.3	0.58	True	2,221.19	58.1	41.6	True
J-118	Zone-1	832.0	950.8	0.87	True	1,671.55	51.4	23.5	True
J-120	Zone-1	850.0	950.0	0.72	True	1,450.26	43.3	20.0	True
J-121	Zone-1	861.0	949.2	0.00	True	1,329.51	38.2	20.0	True
J-122	Zone-1	845.0	948.6	0.58	True	1,690.75	44.8	23.0	True
J-123	Zone-1	826.0	961.9	4.09	True	7,663.54	58.8	20.0	True
J-124	Zone-1	850.0	961.7	0.43	True	6,379.60	48.3	20.0	True
J-125	Zone-1	838.0	961.1	3.50	True	5,013.75	53.3	20.0	True
J-126	Zone-1	821.0	960.6	12.26	True	6,681.68	60.4	20.0	True
J-127	Zone-1	815.0	961.8	16.90	True	6,614.05	63.5	20.0	True
J-128	Zone-1	804.0	961.5	107.92	True	4,002.75	68.1	20.0	True
J-129	Zone-1	800.0	961.3	36.06	True	3,154.91	69.8	20.0	True
J-130	Zone-1	792.0	959.6	4.38	True	5,855.62	72.5	20.0	True
J-133	Zone-1	817.0	957.5	2.75	True	1,678.78	60.8	20.0	True
J-134	Zone-1	822.0	957.5	3.12	True	5,599.10	58.6	20.0	True
J-135	Zone-1	826.0	955.4	3.61	True	6,191.37	56.0	20.0	True
J-141	Zone-1	810.0	953.8	8.11	True	6,834.41	62.2	20.0	True
J-142	Zone-1	814.0	953.6	1.30	True	8,178.72	60.4	20.0	True
J-143	Zone-1	816.0	951.6	0.58	True	7,990.57	58.7	20.0	True
J-144	Zone-1	818.0	951.0	1.45	True	3,480.96	57.6	20.0	True
J-145	Zone-1	859.0	947.8	0.87	True	4,401.14	38.4	20.0	True
J-146	Zone-1	820.0	949.6	0.43	True	7,981.00	56.1	25.2	True
J-147	Zone-1	819.0	949.4	0.00	True	8,462.71	56.4	21.0	True
J-148	Zone-1	850.0	948.3	0.00	True	7,613.54	42.5	20.0	True
J-149	Zone-1	813.0	953.0	1.45	True	5,223.05	60.6	20.0	True
J-150	Zone-1	812.0	950.8	2.17	True	4,542.31	60.1	20.0	True
J-151	Zone-1	805.0	949.0	0.00	True	3,252.97	62.3	20.0	True
J-152	Zone-1	808.0	949.0	0.00	True	3,280.93	61.0	20.0	True
J-153	Zone-1	799.0	949.0	35.52	True	3,346.47	64.9	20.0	True
J-154	Zone-1	787.0	949.0	0.00	True	3,648.27	70.1	20.9	True
J-155	Zone-1	785.0	949.0	0.00	True	4,357.53	71.0	21.1	True
J-156	Zone-1	782.0	948.9	35.52	True	4,122.45	72.2	20.0	True
J-157	Zone-1	799.0	949.0	35.52	True	4,061.44	64.9	20.0	True
J-158	Zone-1	801.0	949.2	0.72	True	4,810.58	64.1	22.0	True
J-159	Zone-1	802.0	948.9	0.29	True	3,983.72	63.6	20.0	True
J-160	Zone-1	807.0	949.4	0.72	True	5,239.71	61.6	20.2	True
J-161	Zone-1	830.0	949.2	0.43	True	4,557.58	51.6	20.0	True
J-162	Zone-1	835.0	949.2	0.72	True	4,400.50	49.4	20.0	True
J-164	Zone-1	847.0	949.2	0.87	True	4,780.17	44.2	20.0	True
J-165	Zone-1	845.0	948.9	1.30	True	4,343.71	45.0	22.3	True
J-166	Zone-1	825.0	949.1	0.82	True	3,585.99	53.7	20.0	True

	Zone-1	817.0	948.9	1.01	True	3,363.21	57.1	20.0	True
J-168	Zone-1	815.0	948.9	0.87	True	3,375.13	57.9	20.0	True
J-169	Zone-1	810.0	948.9	0.58	True	3,621.23	60.1	20.0	True
J-170	Zone-1	800.0	948.9	0.00	True	4,556.80	64.4	20.6	True
J-171	Zone-1	802.0	948.9	35.67	True	3,859.48	63.5	20.0	True
J-172	Zone-1	800.0	948.8	1.36	True	3,369.56	64.4	20.0	True
J-173	Zone-1	805.0	948.8	0.00	True	3,163.84	62.2	20.3	True
J-174	Zone-1	830.0	948.9	12.13	True	2,974.64	51.4	20.0	True
J-175	Zone-1	843.0	948.9	2.02	True	2,661.85	45.8	20.0	True
J-176	Zone-1	835.0	948.9	1.16	True	2,755.98	49.3	20.0	True
J-177	Zone-1	820.0	948.9	1.59	True	3,041.07	55.8	20.0	True
J-178	Zone-1	822.0	948.8	1.59	True	2,822.03	54.9	20.0	True
J-179	Zone-1	851.0	948.7	0.72	True	2,277.08	42.3	20.0	True
J-180	Zone-1	819.0	948.8	2.02	True	2,701.25	56.2	20.0	True
J-181	Zone-1	819.0	948.8	0.58	True	2,929.34	56.2	20.0	True
J-183	Zone-1	841.0	948.8	0.87	True	1,865.75	46.6	20.0	True
J-184	Zone-1	837.0	948.7	1.55	True	2,355.63	48.3	20.0	True
J-185	Zone-1	857.0	948.7	0.58	True	2,234.16	39.7	20.0	True
J-186	Zone-1	860.0	948.8	1.16	True	3,923.87	38.4	20.0	True
J-187	Zone-1	862.0	948.6	1.45	True	3,947.99	37.5	20.0	True
J-188	Zone-1	861.0	948.6	0.00	True	2,466.70	37.9	20.0	True
J-189	Zone-1	868.0	948.4	1.46	True	3,767.15	34.8	20.0	True
J-190	Zone-1	863.0	948.6	0.58	True	2,349.90	37.0	20.0	True
J-191	Zone-1	862.0	948.0	0.00	True	2,604.18	37.2	20.0	True
J-192	Zone-1	861.0	947.6	0.72	True	7,619.48	37.5	21.0	True
J-197	Zone-1	855.0	949.3	0.72	True	2,536.70	40.8	20.4	True
J-198	Zone-1	856.0	949.3	0.72	True	1,787.57	40.4	20.0	True
J-199	Zone-1	867.0	947.8	1.41	True	5,034.80	35.0	20.0	True
J-200	Zone-1	868.0	948.0	0.00	True	4,438.99	34.6	20.0	True
J-201	Zone-1	865.0	948.0	0.00	True	3,624.65	35.9	20.0	True
J-202	Zone-1	818.0	1,015.2	1.01	True	4,421.96	85.3	21.1	True
J-203	Zone-1	820.5	1,015.2	1.59	True	3,194.44	84.3	20.0	True
J-205	Zone-1	812.0	971.5	5.59	True	5,034.28	69.0	20.0	True
J-206	Zone-1	827.0	964.9	10.91	True	4,798.36	59.7	20.0	True
J-207	Zone-1	845.0	980.8	0.14	True	1,941.40	58.8	25.6	True
J-208	Zone-1	845.0	961.7	0.87	True	6,361.18	50.5	20.0	True
J-211	Zone-1	764.5	1,021.0	4.09	True	3,324.27	111.0	20.0	True
J-212	Zone-1	760.5	1,025.6	0.00	True	2,854.73	114.7	20.0	True
J-213	Zone-1	758.0	1,028.1	4.09	True	3,133.93	116.8	20.0	True
J-214	Zone-1	759.5	1,031.4	0.00	True	4,987.24	117.6	51.9	True
J-215	Zone-1	765.0	1,028.4	1.36	True	4,517.16	113.9	41.5	True
J-216	Zone-1	779.0	1,014.9	0.00	True	4,464.03	102.1	34.1	True
J-217	Zone-1	763.0	1,014.9	0.00	True	3,784.17	109.0	23.0	True
J-218	Zone-1	770.0	1,014.9	2.72	True	3,210.28	105.9	20.0	True
J-219	Zone-1	767.0	1,014.9	0.00	True	2,815.65	107.2	20.0	True
J-220	Zone-1	760.0	1,014.9	5.45	True	2,366.87	110.3	20.0	True
J-222	Zone-1	821.0	1,037.1	0.00	True	5,673.32	93.5	29.1	True
J-223	Zone-1	818.0	1,018.2	0.00	True	5,274.00	86.6	20.9	True
J-224	Zone-1	819.0	1,023.6	0.00	True	5,845.47	88.5	23.9	True
J-225	Zone-1	828.0	1,023.6	3.16	True	2,260.09	84.6	20.0	True
J-226	Zone-1	818.0	1,019.2	0.00	True	5,511.37	87.1	24.3	True
J-227	Zone-1	821.0	1,019.2	0.43	True	3,130.67	85.8	23.0	True
J-228	Zone-1	828.0	1,019.2	0.58	True	2,211.40	82.7	20.0	True
J-229	Zone-1	819.5	1,008.5	0.14	True	6,468.59	81.8	20.0	True
J-230	Zone-1	819.0	1,009.5	0.29	True	6,367.60	82.4	20.0	True
J-231	Zone-1	819.0	1,009.5	0.20	True	6,210.75	82.4	20.0	True
J-232	Zone-1	865.0	978.4	1.01	True	1,603.03	49.1	20.4	True
J-237	Zone-1	820.0	952.7	1.30	True	1,810.90	57.4	34.7	True
J-238	Zone-1	852.0	953.5	1.01	True	1,420.79	43.9	25.7	True
J-239	Zone-1	861.0	954.1	0.43	True	1,221.02	40.3	28.1	True
J-240	Zone-1	859.0	954.1	0.72	True	1,127.22	41.1	20.0	True
J-241	Zone-1	860.0	954.4	0.72	True	1,094.81	40.8	32.9	True
J-242	Zone-1	825.0	952.7	0.87	True	1,548.50	55.3	24.3	True
J-243	Zone-1	835.0	952.7	1.16	True	1,023.73	50.9	20.0	True
J-245	Zone-1	824.0	950.8	0.00	True	1,161.93	54.9	26.9	True
J-246	Zone-1	835.0	950.8	0.29	True	1,078.74	50.1	22.2	True
J-247	Zone-1	840.0	950.8	0.58	True	993.41	48.0	20.0	True
J-250	Zone-1	839.0	950.3	0.29	True	1,535.65	48.1	22.4	True
J-251	Zone-1	863.0	948.2	0.43	True	1,695.68	36.9	20.0	True
J-254	Zone-1	843.0	949.2	0.72	True	1,257.15	46.0	20.0	True
J-255	Zone-1	863.0	947.6	0.00	True	10,000.00	36.6	22.7	True
J-256	Zone-1	843.0	949.3	0.58	True	4,210.49	46.0	25.6	True
J-259	Zone-1	803.0	949.0	0.29	True	3,262.23	63.2	20.0	True
J-260	Zone-1	800.0	949.1	0.00	True	4,634.24	64.5	23.2	True
J-269	Zone-1	763.0	1,035.2	1.01	True	5,702.58	117.8	52.1	True
J-272	Zone-1	819.0	1,037.5	0.00	True	6,528.25	94.5	38.5	True
J-274	Zone-1	772.0	1,035.2	0.00	True	2,952.70	113.9	20.7	True
J-275	Zone-1	790.0	1,035.2	0.00	True	2,952.69	106.1	20.0	True
J-278	Zone-1	770.0	1,035.2	0.00	True	3,427.20	114.7	28.7	True
J-279	Zone-1	890.0	954.4	0.00	True	1,077.96	27.9	20.0	True
J-280	Zone-1	820.0	1,039.8	0.00	True	6,669.23	95.1	40.9	True
J-281	Zone-1	770.0	1,035.2	0.00	True	4,569.15	114.7	28.7	True

	Zone-1	780.0	1,035.2	3.24	True	2,788.86	110.4	22.6	True
J-284	Zone-1	830.0	999.4	2.68	True	5,237.10	73.3	20.0	True
J-285	Zone-1	790.0	1,035.2	0.00	True	2,560.79	106.1	20.0	True
J-286	Zone-1	790.0	1,035.2	0.00	True	2,607.43	106.1	20.0	True
J-287	Zone-1	790.0	1,035.2	3.76	True	3,082.90	106.1	20.0	True
J-290	Zone-1	846.0	949.1	1.40	True	4,656.31	44.6	20.0	True
J-291	Zone-1	848.0	980.3	1.45	True	1,948.85	57.2	25.5	True
J-292	Zone-1	863.0	980.5	0.00	True	1,711.61	50.8	20.0	True
J-293	Zone-1	860.0	980.6	0.58	True	1,758.09	52.2	20.0	True
J-294	Zone-1	821.0	1,037.1	0.00	True	5,626.81	93.5	20.0	True
J-295	Zone-1	816.0	1,016.2	0.39	True	6,022.05	86.6	20.0	True
J-297	Zone-1	885.0	954.7	0.00	True	1,197.52	30.2	20.4	True
J-297	Zone-2	895.0	1,010.9	0.29	True	2,072.65	50.2	20.0	True
J-298	Zone-2	897.0	1,010.9	0.00	True	2,169.03	49.3	20.0	True
J-299	Zone-1	840.0	982.4	0.00	True	2,171.39	61.6	22.2	True
J-300	Zone-1	845.0	982.4	0.20	True	1,892.16	59.4	20.0	True
J-301	Zone-2	895.0	1,109.4	0.00	True	2,256.06	92.8	22.6	True
J-302	Zone-1	846.0	978.4	0.29	True	1,008.64	57.3	20.0	True
J-303	Zone-1	840.0	978.4	1.16	True	1,008.66	59.9	21.8	True
J-304	Zone-1	795.5	949.0	35.52	True	4,538.31	66.4	20.0	True
J-305	Zone-1	800.0	948.9	35.52	True	4,235.84	64.4	20.0	True
J-308	Zone-1	786.0	1,035.2	1.16	True	1,948.12	107.8	20.0	True
J-309	Zone-1	783.2	1,035.2	1.45	True	2,832.79	109.0	21.5	True
J-310	Zone-1	785.5	1,035.2	2.17	True	2,868.42	108.0	20.8	True
J-311	Zone-1	782.2	1,035.2	0.00	True	2,952.70	109.5	20.3	True
J-312	Zone-1	783.0	1,035.2	2.46	True	2,060.49	109.1	20.0	True
J-313	Zone-1	782.0	1,035.2	0.87	True	1,875.54	109.5	20.0	True
J-314	Zone-1	780.0	1,035.2	0.00	True	1,864.01	110.4	20.0	True
J-315	Zone-1	812.9	1,038.2	0.00	True	6,542.94	97.5	44.3	True
J-316	Zone-1	817.7	986.2	0.00	True	5,392.02	72.9	26.0	True
J-317	Zone-1	878.0	1,018.7	0.00	True	3,576.65	60.9	20.0	True
J-318	Zone-1	800.0	1,018.6	0.00	True	3,637.48	94.6	52.1	True
J-319	Zone-1	805.0	1,018.6	0.00	True	3,716.01	92.4	47.8	True
J-320	Zone-1	811.4	1,018.5	0.00	True	3,746.40	89.6	44.3	True
J-321	Zone-1	808.0	1,018.6	0.00	True	3,549.79	91.1	20.0	True
J-322	Zone-1	826.0	978.4	0.00	True	1,008.62	65.9	25.1	True
J-323	<None>	812.2	965.7	0.00	True	4,794.69	66.4	20.0	True

R:\Hydraulic Analysis\Zillah\13033\13033 Zillah Hydraulic Analysis.wtg

Scenario: 2019 MD FF
Current Time Step: 0.000Hr
FlexTable: Tank Table

Label	Zone	Diameter (ft)	Elevation (Base) (ft)	Elevation (Minimum) (ft)	Elevation (Initial) (ft)	Elevation (Maximum) (ft)	Flow (Out net) (gpm)	Hydraulic Grade (ft)	Status (Calculated)
T-1	Zone-1	22.00	873.9	950.5	952.5	976.9	-1,738.27	952.5	Filling
T-2	Zone-1	35.83	868.6	922.6	947.5	972.6	-1,181.72	947.5	Filling
T-4	Zone-1	60.00	821.0	821.0	849.5	850.0	2,117.49	849.5	Emptying

R:\Hydraulic Analysis\Zillah\13033\13033 Zillah Hydraulic Analysis.wtg

Scenario: 2019 MD FF
Current Time Step: 0.000Hr
FlexTable: Pump Table

Label	Elevation (ft)	Pump Definition	Status (Initial)	Hydraulic Grade (Suction) (ft)	Hydraulic Grade (Discharge) (ft)	Flow (Total) (gpm)	Pump Head (ft)	Zone
PMP-2	895.0	ALTEEJAN BOOSTER PUMP max day	On	954.4	1,109.4	2.99	155.00	Zone-2
PMP-3	820.0	Cutler Way Booster Pump Future	On	848.4	1,041.6	2,117.49	193.15	Zone-1

R:\Hydraulic Analysis\Zillah\13033\13033 Zillah Hydraulic Analysis.wtg

CITY OF ZILLAH
DESIGN AND CONSTRUCTION STANDARDS

CITY OF ZILLAH

DESIGN AND CONSTRUCTION STANDARDS AND SPECIFICATIONS FOR PUBLIC WORKS IMPROVEMENTS

City of Zillah
503 First Avenue
Zillah, WA 98953
Phone (509) 829-5151
Fax (509) 829-5457

April 2007

INDEX

CHAPTER 1 - GENERAL 1
1. ENACTING AUTHORITY 1
2. PURPOSE 1
3. STATE ENVIRONMENT POLICY ACT (SEPA) 1
4. CONFLICTING PROVISIONS 1
5. SEVERANCE 1
6. PROCESS 1
7. ENGINEERING DESIGN PLAN REQUIREMENTS 2
8. PLAN REVIEW AND INSPECTION FEE 2
9. RECORD DRAWINGS 3
10. TRANSFER OF OWNERSHIP 3
11. EASEMENTS 3

CHAPTER 2 - GENERAL PLAN REQUIREMENTS 4
GENERAL PLAN FORMAT 4
SANITARY SEWER SYSTEM PLAN REQUIREMENTS 5
WATER SYSTEM PLAN REQUIREMENTS 5
STORMWATER SYSTEM PLAN REQUIREMENTS 6
STREET PLAN REQUIREMENTS 7

CHAPTER 3 - GENERAL REQUIREMENTS FOR ALL PROJECTS 9
FORWARD 9
GENERAL 9
1-01 DEFINITIONS AND TERMS 10
1-04 SCOPE OF THE WORK 11
1-05 CONTROL OF WORK 12
1-07 LEGAL RELATION AND RESPONSIBILITIES TO THE PUBLIC 15
1-08 PROSECUTION AND PROGRESS 18
1-10 TEMPORARY TRAFFIC CONTROL 18

CHAPTER 4 - WATER SYSTEM IMPROVEMENTS 20
GENERAL REQUIREMENTS FOR WATER MAINS 20
REQUIREMENTS FOR IRRIGATION SYSTEMS 21
SPECIAL PROVISIONS FOR WATER MAINS 21
7-09 WATER MAINS 21
7-12 VALVES FOR WATER MAINS 22
7-14 FIRE HYDRANTS 23
7-15 SERVICE CONNECTIONS 24

CHAPTER 5 - SANITARY SEWER SYSTEM IMPROVEMENTS 25
GENERAL REQUIREMENTS FOR SANITARY SEWER MAINS 25
SPECIAL PROVISIONS FOR SANITARY SEWER MAINS 26
7-05 MANHOLES, INLETS, CATCH BASINS, AND DRYWELLS 26
7-08 GENERAL PIPE INSTALLATION REQUIREMENTS 27
7-17 SANITARY SEWERS 28
7-18 SIDE SEWERS 29

CHAPTER 6 - STORMWATER IMPROVEMENTS 30
GENERAL REQUIREMENTS FOR STORMWATER IMPROVEMENTS 30
SPECIAL PROVISIONS FOR STORM SEWERS AND DRAINAGE 30
7-02 CULVERTS 30

7-04 STORM SEWERS 31
7-05 MANHOLES, INLETS, CATCH BASINS, AND DRYWELLS 32

CHAPTER 7 - STREET IMPROVEMENTS 33
GENERAL REQUIREMENTS FOR STREET IMPROVEMENTS 33
TRAFFIC STUDIES 33
STREET DESIGN REQUIREMENTS 33
SPECIAL PROVISIONS FOR STREET IMPROVEMENTS 34
2-03 ROADWAY EXCAVATION AND EMBANKMENT 34
2-07 WATERING 34
5-04 HOT MIX ASPHALT 35
8-04 CURBS, GUTTERS, AND SPILLWAYS 37
8-06 CEMENT CONCRETE DRIVEWAY ENTRANCES 38
8-14 CEMENT CONCRETE SIDEWALKS 38
8-21 PERMANENT SIGNING 38
8-30 CONTROLLED DENSITY FILL 39

APPENDIX A - TRANSFER OF OWNERSHIP FORMS
APPENDIX B - STANDARD DETAILS

CHAPTER 1 - GENERAL

1. ENACTING AUTHORITY

These Design and Construction Standards are enacted by the City of Zillah, in accordance with state law, to protect and preserve the public health, safety, and general welfare.

2. PURPOSE

The purpose of these Design and Construction Standards is to provide consistent requirements, standards, and specifications for the design and construction of public works infrastructure improvements by the City and by private developers.

3. STATE ENVIRONMENT POLICY ACT (SEPA)

These Standards will not affect any considerations involving issues under the State Environmental Policy Act (SEPA). The City's responsible official will continue to make all necessary SEPA decisions when individual proposals are submitted.

4. CONFLICTING PROVISIONS

The standards, procedures, and requirements of these Standards are the minimum necessary to promote the health, safety, and welfare of the residents of the City of Zillah. The City may adopt more rigorous or different standards, procedures, and requirements whenever necessary. If the provisions of these Standards conflict with one another, or if a provision of these Standards conflicts with the provision of the City Code or another Ordinance of the City, the most restrictive provision or the provision imposing the highest standard shall prevail.

5. SEVERANCE

If any provision of these Standards or its application to any person or circumstance is for any reason held to be invalid, the remainder of these Standards or the application of the provisions is not affected.

6. PROCESS

Design Phase

Any person, firm, or corporation (the "Developer") which intends to plat land in accordance with the City of Zillah Code and construct a public works improvement shall apply to the City Director of Public Works. The request by the Developer shall include a map showing the area to be served; the number and type of proposed units, or the type and size of the proposed facility and a general layout of the development.

Upon receipt of the design requirements from the Director of Public Works, the Developer shall employ a Consulting Engineer to prepare plans and specifications for the public works improvements in accordance with these Construction Standards and the Zillah Municipal Code. The Developer or its Consulting Engineer shall submit three (3) paper sets of plans and specifications for review by the City and/or the City's engineer.

The City shall review the initial submittal and indicate corrections or additions or request additional information and return one "red lined" set to the Developer. The Developer shall make the required corrections and resubmit two (2) paper sets of revised plans and specifications to the City Public Works Department.

When it has been determined the plans and specifications indicate compliance with City of Zillah standards, the Developer shall submit the original plan tracings and specifications for final approval to the City. The cover sheet of the original plans shall contain an "APPROVED FOR CONSTRUCTION BY THE CITY OF ZILLAH" signature block. The City's responsible official will sign the plans. Such approved plans and specifications shall not be changed, modified, or altered without authorization from the City Public Works Director. The Developer shall provide the City with a minimum of three (3) copies of the approved plan set and specifications for use by City Inspectors and City Departments as required.

Upon receipt by the Director of Public Works of the plan review fee, as discussed in Chapter 1, Section 8, the approved original plans and specifications will be returned to the Developer.

Construction Phase

Before the Developer's Contractor commences any work, he shall be required to attend a Preconstruction Conference with the City Public Works Department, the City's Engineer, and utility companies as determined by the City of Zillah. The Contractor will submit his insurance and construction schedule at this meeting.

All construction shall be inspected by the City of Zillah or its authorized agent. The Contractor shall give ten (10) days minimum prior notice to the Director of Public Works the start of any construction activities.

After cleanup by the Contractor and final inspection by the City, the City will calculate the inspection fees and submit them to the Developer. The Developer will pay the inspection fee, as discussed in Section 8, to the Public Works Department.

7. ENGINEERING DESIGN PLAN REQUIREMENTS

All plans, specifications, engineering calculations, diagrams, and other relevant data shall be designed and prepared by a Civil Engineer licensed by the State of Washington (Consultant), in accordance with Chapter 2 - General Plan Requirements.

8. PLAN REVIEW AND INSPECTION FEE

Plan review and inspection fees are hereby established to defray the administrative expense of plan review and inspection costs incurred by the City of Zillah.

The plan review and inspection fee shall be the total actual costs incurred by the City of Zillah, its agents, employees, and elected or appointed officials, for review and approval of the plans and specifications and for inspection of construction of the public works improvements. The fee shall include, but not be limited to, initial plan review, subsequent meetings with the Developer, explanations to the Developer's engineering consultant, reviews of revised plans, construction inspection, re-inspections, and a final inspection prior to the expiration of the maintenance period.

The plan review fee shall be tabulated and sent to the Developer and paid by the Developer in full prior to the City releasing the approved original plans and specifications for construction or the issuance of a Building Permit.

The construction inspection fee shall be tabulated and sent to the Developer and paid by the Developer in full prior to the City issuing a Certificate of Occupancy or final acceptance of the public works improvements.

9. RECORD DRAWINGS

The Developer's Consulting Engineer shall maintain a neatly marked, full-sized print set of record drawings showing the final location and layout of all new construction of the public facilities. Prior to final acceptance by the City of Zillah, one (1) set of reproducible Record Drawings and two (2) sets of prints prepared by the Developer's engineer and clearly marked "Record Drawings" shall be delivered to the Director of Public Works for review and approval.

10. TRANSFER OF OWNERSHIP

The Developer shall complete a Transfer of Ownership Form upon completion of the construction of the public works improvements and pending acceptance by the City. This form may be found in Appendix A.

11. EASEMENTS

Public utility easements shall be established for the location of new and future public improvements serving new land divisions and land developments. Easements shall also be granted across the front of new lots and existing lots to provide future utility access as required.

All easements required shall be prepared by the Developer on the proper form and format for recording at the Yakima County Auditor's Office. The easement legal description shall be prepared by a land surveyor licensed in the State of Washington. The executed and notarized easement document shall be submitted to the Director of Public Works for recording.

Eight (8) foot wide utility easements shall be dedicated along the front of each lot in subdivisions and short subdivisions. Easements for new and/or future utility lines shall be a minimum of sixteen (16) feet wide, provided the width of the easements for buried utilities will be at least twice the depth of the planned excavation.

Utility easements shall be continuous and aligned from block to block within a subdivision and with easements in adjoining subdivisions to facilitate the extension and future extension of public utilities.

CHAPTER 2 - GENERAL PLAN REQUIREMENTS

All plans, specifications, engineering calculations, diagrams, and other relevant data shall be designed and prepared by a Civil Engineer licensed by the State of Washington.

GENERAL PLAN FORMAT

1. Plan sheets and profile sheets or combined plan and profile sheets and detail sheets shall be on a sheet size of 24" x 36" or 22" x 34".

2. Each sheet shall contain the following project information:

   a. Project title and City project number, work order number, or LID number, if appropriate.
   b. Quarter section, Section - Township - Range
   c. Sheet title.
   d. Page (of page) numbering.
   e. Revision block.
   f. Subdivision or short plat name

3. The Cover sheet shall contain the following:

   a. Name, address, and phone number of the owner/developer;
   b. Name, address, and phone number and stamp of the Civil Engineer preparing the plans (Consultant);
   c. "APPROVED FOR CONSTRUCTION BY THE CITY OF ZILLAH" signature block for City final approval of the plans;
   d. "APPROVED FOR CONSTRUCTION BY THE CITY OF ZILLAH FIRE CHIEF" signature block
   e. Vicinity map showing the project site location;
   f. An overall site plan with contours;
   g. Table of Contents;
   h. Applicable project information; and
   i. Utility Locater Call # 1-800-424-5555.

4. All plan sheets must have a NORTH arrow preferably pointing to the top of the sheet or to the left, and must indicate the drawing scale. All engineering plans must be drawn to an appropriate engineer's scale. For profiles, the vertical scale shall be 1"=2, 1"=5 or 1"=10'. The horizontal scale shall be the same for both plan and profile and shall normally be 1" = 20'. Plan and profile stationing shall generally read left to right.

5. The Vertical Datum for all plan submittals must be based on the City of Zillah Datum. The benchmark used shall be referenced on the plans. An assumed datum will not be accepted.

6. Existing features and topography within the project construction limits must be shown on the plans. This shall include existing road width and surfacing, utility poles, existing underground utilities and surface appurtenances, significant trees, landscaping, and other elements that may affect design/construction.

7. Plan sheets shall indicate all adjacent property lines, right of way lines, and easements.

8. Plan sheets shall show all horizontal survey control as required to properly locate and tie the improvements in horizontal location.

SANITARY SEWER SYSTEM PLAN REQUIREMENTS

1. Show all existing and proposed sanitary sewer system features including, but not limited to, the following:

   a. Sewer lines, gravity and force mains
   b. Side service, proposed locations
   c. Manholes
   d. Clean outs
   e. Pump stations.

2. Indicate all easements required for the sanitary sewer line extensions and laterals.

3. Provide an overall site plan of development with contours, to show that all lots/parcels will be served by the proposed sewer system at design depth for all new development.

4. Show the sanitary sewer system and water system on the same plan and profile for verification of minimum separation requirements. The design information for each may be on individual drawings for that system.

5. Slope, length, size, and pipe type shall be indicated for all lines and side sewers. Pipe length shall be measured from centerline of manholes. The minimum sewer line size allowed will be eight (8) inch diameter.

6. Provide a profile for each sanitary sewer line extension. Clearly indicate the vertical and horizontal scale. Show the profile on the same sheet with, and aligned underneath, the plan view as practical.

7. The plan and profile must show the location of all existing and proposed gas, water, irrigation, storm drain, and other utility crossings.

8. Generally show all vertical data in the profile view and all horizontal data in the plan view. It is not desirable to repeat the vertical data in the plan view unless it does not show in a profile.

9. Each manhole shall be uniquely numbered and shall be stationed off of a referenced centerline. Indicate rim and invert elevations in and out at all manholes. Indicate the length of each side sewer stub, the centerline stationing for each side sewer, and the size.

WATER SYSTEM PLAN REQUIREMENTS

1. Show all existing and proposed water system features if known, including but not limited to:

   a. Water mains
   b. Water valves
   c. Water meters
   d. Fire hydrants
   e. Blow offs
   f. Air and vacuum release valve assemblies

g. Pressure reducing valves
h. Fire sprinkler system lines
I. Double check valves
j. Post indicator valves
k. Thrust blocking

2. Indicate all easements required for the water main extensions and future extensions.

3. Show the water system and the sanitary sewer system on the same plan and profile view for verification of minimum separation requirements. The design information for each system may be on individual drawings for that system.

4. Show the length, size, and pipe type for all main extensions, fire sprinkler system services, and domestic services where applicable.

5. Identify all joint connections; provide detail of all non-standard joints.

6. Show by station or dimension the location of all fire hydrants, tees, crosses, and services relative to centerlines or property lines.

7. A profile view shall be shown for all City water main extensions, aligned if practical with the plan view. Clearly indicate the horizontal and vertical scales.

8. Show the minimum cover and minimum separation on each sheet.

9. In the profile view, show all utilities crossing the proposed water main.

STORMWATER SYSTEM PLAN REQUIREMENTS

1. Show all existing features if known and all proposed storm sewer (drain) system features, including but not limited to:

a. Storm drain mains and lines
b. Catch basins
c. Inlets
d. Infiltration trenches
e. Retention systems
f. Biofiltration swales
g. Culverts
h. Streams
I. Ditches
j. Natural drainage swales
k. Headwalls
l. Oil/water separator assembly
m. Other requirements of the Department of Ecology Stormwater Manual for Eastern Washington

2. Indicate all easements required for the storm drainage system.

3. The plan shall clearly indicate the location of the storm drainage items stationed from a referenced centerline.

4. Show all horizontal measurements and control in the plan view.

5. Show slope, length, size, and pipe material for all storm drain mains and lines.

6. All catch basins and inlets shall be uniquely numbered and shall be clearly labeled. Stationing and offsets shall be indicated from referenced centerline. Show all proposed storm drain features within the right of way in a profile.

7. Indicate all grate, rim, and invert elevations in the profile view.

8. Provide stormwater runoff and drainage facilities sizing calculations as described in Chapter 6.

STREET PLAN REQUIREMENTS

1. Show all existing and proposed roadway improvements, including but not limited to:

   a. Pavement
   b. Concrete curb and gutter
   c. Edge of pavement
   d. Sidewalk(s)
   e. Utilities (manholes, power poles, pedestals, valves, water meters, etc.)
   f. Sidewalk ramps
   g. Signs and Barricades
   h. Driveways
   I. Rockery or retaining walls
   j. Mailboxes
   k. Monuments
   l. Streetlights, J-boxes and conduit runs
   m. Compliance with ADA requirements

2. Show all Right of Way (R/W) lines, centerlines, and roadway widths for all rights of way.

3. Clearly differentiate between areas of existing pavement, areas of new pavement, and areas to be overlaid.

4. Provide a cross section or typical section of all rights of way indicating right of way width, centerline, pavement width, sidewalk, curb and gutter, pavement, and base thickness of proposed section.

5. Provide a Plan and Profile of all new public roadways or extensions of existing roadways. Provide topography within the R/W including utilities. Indicate all horizontal and vertical curve data, percent of grade, bearings, centerline stationing every 50 feet, finish grade elevations, and existing ground line. The profile of the existing centerline ground should extend a minimum of 100 feet before the beginning and at the end of the proposed improvements to show the gradient blend.

6. Align the profile view with the plan view, if practical. Clearly indicate the horizontal and the vertical scale.

7. Clearly label all profiles with respective street names and plan sheet reference numbers if drawn on separate sheets.

8. For developments where road work is required on an existing street, development plans are required to include cross section of the existing street and spot elevations at proposed intersections and appurtenances to the project.

CHAPTER 3 - GENERAL REQUIREMENTS FOR ALL PROJECTS

FORWARD

The City of Zillah has adopted the latest edition of the Standard Specifications for Road, Bridge, and Municipal Construction prepared by the Washington State Department of Transportation (WSDOT), and the American Public Works Association (APWA) General Special Provisions (GSP's) for Division One General Requirements as the standard specifications governing all design and construction of public works improvements by the City and by private developers.

All references hereinafter made to the "Standard Specifications" shall refer to the latest edition of the Standard Specifications described above. Except as may be amended, modified, or supplemented hereinafter, each section of the Standard Specifications shall be considered as much a part of these requirements as if they were actually set forth herein.

The Standard Specifications, General and Project Special Provisions, and City Standard Plans and Details contained in these **City Construction Standards** shall apply in their entirety to all City of Zillah public works projects. These Standards have been prepared to form a compiled document intended to assist and inform developers, consultants, and contractors of the construction requirements to be used on proposed public works improvements.

The Standard Specifications, General and Project Special Provisions, and City Standard Plans and Details shall periodically be revised and updated. It shall be the responsibility of each user of this information to verify that he has the latest revisions prior to submitting any work covered by these specifications and details.

Developers and contractors are encouraged to contact the City of Zillah Public Works Department to obtain a copy of these standards.

GENERAL

All work shall be done in accordance with the approved Plans, the Standard Specifications for Road, Bridge, and Municipal Construction prepared by the Washington State Department of Transportation, latest edition, amendments, referenced codes and organizations, and these Special Provisions.

Note: The American Public Works Association (APWA) General Special Provisions (G.S.P.'s) to Division One of the WSDOT Standard Specifications amend Division One of the "Standard Specifications For Road, Bridge, And Municipal Construction." These GSP's are available at www.wsdot.wa.gov/partners/apwa.

All materials incorporated into a proposed public works improvements project shall meet the requirements of Division Nine of the Standard Specifications or City of Zillah Standards as shown in the Standard Plans and Details and Special Provisions.

Any Public Works facility improvements or components that are not specifically addressed in these Construction Standards shall be designed by a professional engineer and provided to the City for review by the City Engineer and approval.

1-01 DEFINITIONS AND TERMS

1-01.3 DEFINITIONS

The terms defined in Section 1-01.3 of Division One of the Standard Specifications and the APWA GSP's shall be further described by the following:

Consultant:	Means an engineer licensed in the State of Washington, employed by the Developer to design the improvement and prepare plans and specifications, perform construction staking, or similar services.
Contract Documents:	Means the plans and specifications prepared by the Developer's Consultant for the public works improvements contemplated and approved by the City.
City:	Means the City of Zillah, a municipal corporation, as represented by its authorized officials, employees or agents.
Contractor:	Means the person or firm employed by the Developer or under Contract with the City to do the construction of the public works improvements.
Developer:	Means the person or firm constructing the development and engaging the services of and employing consultants, and/or contractors and paying for the design and construction of the public works improvements to be transferred to the City.
Drawings:	Means the construction plans prepared by the Developer's Consultant for the public works improvements contemplated. The terms "Contract Documents," "Plans," "Engineer's Plans," "Engineer's Drawings," "Working Drawings," and "Project Manual" are synonymous.
Public Works Director:	Means the appointed official for the City per 16.08.070.
Engineer:	Means the appointed City Engineer for the City of Zillah or his/her duly authorized agent or representative.
Owner:	Means the City of Zillah acting through its legally established officials, boards, commissions, etc., as represented by its authorized officers, employees, or agents.
Standard Plans and Details:	Means specific drawings adopted by the City of Zillah and revised from time to time which show frequently recurring components of work which have been standardized for use.
Standard Specifications:	The latest edition of the Standard Specifications for Road, Bridge, and Municipal Construction prepared by the Washington State Department of Transportation, and amendments, and the APWA GSP's for Division One that are, by this reference, made part of the Contract Documents. Except as may be amended, modified, or supplemented hereinafter, each section of the Standard

Specifications shall be considered as much a part of these Contract Documents as if they were actually set forth herein.

Special Provisions: The Special Provisions supersede any conflicting provisions of the Standard Specifications for Road, Bridge, and Municipal Construction and the appended amendments to the Standard Specifications and are made a part of a Contract Document.

Should any conflicts be encountered, the following inter-relationships shall govern: The Special Provisions shall supersede the APWA GSP's, which shall supersede the WSDOT Amendments, which shall supersede the Standard Specifications.

1-04 SCOPE OF THE WORK

1-04.4 CHANGES

The provisions of Section 1-04.4 of the Standard Specifications shall be modified as follows:

No changes in the work covered by the approved Contract Documents shall be made without having prior written approval of the Developer and the City.

1-04.11 FINAL CLEANUP

The Contractor shall perform final cleanup as provided in this section to the Developer's and City's satisfaction. The date of completion will not be established until this is done. The material sites and all ground the Contractor occupied to do the work shall be left neat and presentable. The Contractor shall:

1. Remove all rubbish, surplus materials, discarded materials, falsework, temporary structures, equipment, and debris, and

2. Deposit in embankments, or remove from the project, all unneeded, oversized rock left from grading, surfacing, or paving.

Partial cleanup shall be done by the Contractor when he feels it is necessary or when, in the opinion of the City or Developer, partial clean-up should be done prior to either major cleanup or final inspection.

1-04.12 WASTE SITE (NEW SECTION)

The following new section shall be added to the Standard Specifications:

Where there is additional waste excavation in excess of that needed for the project and in excess of that needed for compliance with requests of the Developer or City, the Contractor shall secure and operate his own waste site at his own expense. The Contractor shall also be required to secure and operate his own waste site at his own expense for the disposal of all unsuitable material, asphalt, concrete, debris, waste material, and any other objectionable material which is directed to waste.

The Contractor shall comply with the State of Washington's regulations regarding disposal of waste material as outlined in WAC 173-304, Subchapter 461.

1-05 CONTROL OF WORK

1-05.1 AUTHORITY OF THE ENGINEER

This section is supplemented with the following:

Unless otherwise expressly provided in the Contract Drawings, Specifications and Addenda, the means and methods of construction shall be such as the Contractor may choose; subject, however, to the Consultant and the City's right to reject the means and methods proposed by the Contractor which (1) will constitute or create a hazard to the work, or to persons or property; or (2) will not produce finished work in accordance with the terms of the approved Contract. Documents Approval of the Contractor's means and methods of construction or his failure to exercise his right to reject such means or methods shall not relieve the Contractor of the obligation to accomplish the result intended by the Contract Documents; nor shall the exercise of such right to reject create a cause for action for damages.

1-05.3(1) Project Record Drawings (New Section)

The following new section shall be added to the Standard Specifications:

The Contractor shall maintain a neatly marked, full-size set of as-built drawings showing the final location and layout of all new construction. Drawings shall be kept current weekly, with all field instruction, change orders, and construction adjustment.

Drawings shall be subject to the inspection of the Developer and the City at all times. Prior to acceptance of the work, the Contractor shall deliver to the Developer one set of neatly marked as-built drawings showing the information required above. The Developer shall have prepared and delivered to the City of Zillah the neatly marked Record Drawings in accordance with Section 9 of Chapter 1 - General.

1-05.5 CONSTRUCTION STAKING (NEW SECTION)

The following new section shall be added to the Standard Specifications:

The Consultant retained by the Developer will establish the line and grade of proposed construction by offset stakes. The Consultant will establish the centerline for minor structures and establish bench marks at convenient locations for use by the Contractor.

The Contractor shall establish grades from the Consultant's stakes at suitable intervals in accordance with good practice and acceptable to the City. Where new construction adjoins existing construction, the Contractor shall make such adjustments in grade as are necessary.

1-05.6(1) Testing (New Section)

The following new section shall be added to the Standard Specifications:

The Contractor/Developer shall be responsible for scheduling and paying for all material and compaction testing required by these Construction Standards for new public works improvements. All testing services shall be performed by an independent, certified testing firm and/or laboratory meeting the approval of the Engineer or City. The Contractor shall submit information relating to the qualifications of the proposed testing firm to the Engineer or City for review and approval prior to the preconstruction conference. The testing service shall provide copies of all test results to the Engineer or City immediately after completion. The testing frequencies listed below may be modified to assure compliance with the Specifications.

Trench Backfill

Copies of moisture-density curves for each type of material encountered and copies of all test results shall be provided to the Engineer or City as construction progresses.

Compaction tests shall be taken at a frequency and at depths sufficient to document that the required density has been achieved. At a minimum, one (1) compaction test shall be taken for each 100 linear feet of mainline pipeline trench and one (1) test for each street crossing. At alternating 100-foot locations along the main trench line, tests shall be taken at 1-foot, 2-foot, and 3-foot depths below finish grade.

The Engineer or City may request additional tests be performed at the Contractor's/Developer's expense, if test results do not meet the required trench backfill densities.

All trenches shall be backfilled and compacted as specified in Section 2-03.3(14)D or to at least 95 percent of maximum density as determined by ASTM D 698 (Standard Proctor).

Roadway Subgrade (Embankment and Excavation Sections)

Copies of the moisture density curves for each type of material encountered and copies of all test results shall be provided to the Engineer or City as construction progresses.

Compaction tests shall be taken at a frequency sufficient to document that the required density has been achieved. At a minimum, one (1) compaction test shall be taken for every 5,000 square feet of subgrade.

The Engineer or City may request additional tests be performed at the Contractor's expense, if test results do not meet the required subgrade densities. Subgrade compaction shall be as specified for Roadway Embankment in Section 2-03.3(14)C Method "C" and 2-03.3(14)D.

Ballast and Crushed Surfacing

Copies of the moisture density curves and gradation for each type of material incorporated into the project and copies of all test results shall be provided to the Engineer or City as construction progresses.

Compaction tests shall be taken at a frequency sufficient to document that the required density has been achieved. At a minimum, one (1) compaction test shall

be taken for every 5,000 square feet of surface area for each lift of ballast or crushed surfacing.

The Engineer or City may request additional tests be performed at the Contractor's/Developer's expense, if test results do not meet the required subgrade densities.

Compaction of ballast and crushed surfacing shall be as specified in SECTION 4-04.3(5).

Asphalt Pavement

Copies of the reference maximum density test for each class of Hot Mix Asphalt pavement and copies of all test results shall be provided to the Engineer or City as construction progresses.

Density tests shall be taken at a frequency sufficient to document that the required density has been achieved. At a minimum, one (1) compaction test shall be taken for every 5,000 square feet of surface area for each lift of asphalt concrete pavement.

The Engineer or City may request additional tests be performed at the Contractor's/Developer's expense, if test results do not meet the required subgrade densities.

Compaction of Hot Mix Asphalt pavement shall be as specified in the following SECTION 5-04.3(10)B in Chapter 7.

Cement Concrete Curb, Gutter, and Sidewalk

A copy of the cement concrete design mix or certification from the concrete supplier that the concrete provided has been prepared to the strength requirement as specified elsewhere in these specifications.

Concrete strength cylinders shall be taken and tested for each truck load of concrete delivered to the job. All testing procedures shall be conducted in accordance with applicable Sections of Division 6-02 of the Standard Specifications.

Copies of all test results shall be provided to the Engineer or City as construction progresses.

1-05.10 GUARANTEES (APWA)

The following new section shall be added to the APWA G.S.P.:

If, within two years (2) after the date of Final Acceptance of the Work, defective and unauthorized materials or work is discovered, the Developer/Contractor shall promptly, upon written request, return and in accordance with the instructions either correct such work, or if such work has been rejected, remove it from the Project Site and replace it with non-defective and authorized work, all without cost to the City. If the Contractor does not promptly comply with the written request to correct defective and unauthorized work, or if an emergency exists, the City reserves the right to have defective and unauthorized work

corrected or rejected, removed, and replaced pursuant to the provisions of Section 1-05.7 of the APWA Division I GSP's of the Standard Specifications.

The Developer/Contractor agrees the above two-year limitation shall not exclude nor diminish any rights under any law to obtain damages and recover costs resulting from defective and unauthorized work discovered after two years.

The Developer shall post a bond for the successful operation and condition of all public improvements for a period of two (2) years following final inspection and acceptance in accordance with the Zillah Municipal Code. (16.32.070)

1-05.16 WATER AND POWER (APWA)

Water shall be furnished and applied in accordance with the provisions of Sections 1-05.16 of the APWA Division One GSP's and 2-07 of the Standard Specifications modified as follows:

Water Supply: Water for use on the projects may be obtained/purchased from the City of Zillah and the Contractor shall arrange for and convey the water from the nearest convenient hydrant or other source at his own expense. The hydrants shall be used in accordance with the City of Zillah Water Department regulations.

The City reserves the right to deny the use of fire hydrants where deemed inappropriate by the City.

1-07 LEGAL RELATION AND RESPONSIBILITIES TO THE PUBLIC

1-07.1 LAWS TO BE OBSERVED

Amend the second sentence of the first paragraph to read:

The Contractor/Developer shall indemnify and save harmless the City of Zillah (including any agents, officers, employees, and representatives) against any claims that may arise because the Contractor (or any employee of the Contractor or subcontractor or materialman) violated a legal requirement.

1-07.5(3) State Department of Ecology

This Section is supplemented with the following:

9) Comply with the requirements and special general conditions of the "General Permit for Storm Water Discharge Associated with Construction Activities" issued by the Washington State Department of Ecology to the Developer/Contractor for this project.

1-07.5(4) Air Quality

In addition to the requirements of Section 1-07.5(4), the Contractor shall comply with the environmental provisions of local air pollution authorities, Yakima County Clean Air Authority.

A method of dust control during construction shall be submitted to, and approved by, the Yakima County Clean Air Authority. A written copy of their approval shall be submitted to the Public Works Director prior to commencement of construction. The Contractor/Developer shall designate a

project coordinator for contact during construction regarding alleged air quality violations and other complaints.

1-07.13 CONTRACTOR'S RESPONSIBILITY FOR WORK

The following shall be added to this section of the Standard Specifications:

The Contractor is responsible for constructing and completing all work included in the Contract Documents and any other work directed by the Developer in a professional manner with first-class workmanship.

The Contractor shall keep the City of Zillah, the Developer, and the Consultant informed in writing of the address to which official correspondence is to be directed, the address and phone number of the person in charge of his field personnel, and the address and telephone number of the Contractor's representative who will be responsible and available outside of normal working hours for emergency repairs and the maintenance of traffic control and safety devices.

1-07.17 UTILITIES AND SIMILAR FACILITIES

Section 1-07.17 is supplemented by the following:

It shall be the Contractor's responsibility to investigate and verify the presence and location of all utilities prior to construction.

The Contractor/Developer shall call for field location, not less than two nor more than ten business days before the scheduled date for commencement of excavation which may affect underground utility facilities, unless otherwise agreed upon by the parties involved. A business day is defined as any day other than Saturday, Sunday, or a legal local, state, or federal holiday. **The phone number for the Northwest Utility Notification Center for Zillah is 1-800-424-5555.** If no one-number locator service is available, notice shall be provided individually by the Contractor to those owners known to or suspected of having underground facilities within the area of proposed excavation.

The Contractor/Developer is alerted to the existence of Chapter 19.122 RCW, a law relating to underground utilities. Any cost to the Contractor/Developer incurred as a result of this law shall be at the Contractor's/Developer's expense.

No excavation shall begin until all known facilities, in the vicinity of the excavation area, have been located and marked.

1-07.18 PUBLIC LIABILITY AND PROPERTY DAMAGE INSURANCE

The Contractor shall obtain and maintain in full force and effect during the duration of this Contract public liability and property damage insurance in accordance with Section 1-07.18 of the APWA Division One GSP's and as modified herein.

Prior to start of construction, the Contractor/Developer shall furnish the City of Zillah a Certificate of Insurance and the additional insured endorsements as evidence of compliance with these requirements. This certificate shall name **the City of Zillah, its employees, agents, elected and appointed officials, engineering consultant, and all subcontractors** as "additional insureds" and shall stipulate that the policies named thereon cannot be canceled unless at least forty-five (45) days written notice has been given to the City of Zillah. The certificate shall not contain the following or similar wording regarding

cancellation notification: **"Failure to mail such notice shall impose no obligation or liability of any kind upon the company, its agents, or representatives."**

1-07.23 PUBLIC CONVENIENCE AND SAFETY

The provisions of Section 1-07.23 of the Standard Specifications are supplemented as follows:

At entrances to business properties and other private roads, driveways, bridges, or other such means as to provide access shall be provided by the Contractor. The Contractor shall maintain vehicular and pedestrian access to businesses at all times that businesses are open for business.

Upon failure of the Contractor to provide immediately and maintain adequate suitable access, when ordered to do so, the City shall be at liberty, without further notice to the Contractor or the Surety, to provide the same and request payment for providing proper access, and the City assumes no liability connected therewith.

Any traffic restriction must have prior approval of the City of Zillah. Appropriate traffic control measures and signing are required during such temporary road closures.

It shall be the responsibility of the Contractor to secure the approval of and notify the Developer, City of Zillah, and the Police and Fire Departments at least 24 hours prior to closing any street, in addition to correlating the proposed closures with the City of Zillah to ensure proper detouring of traffic. When the street is re-opened, it shall again be the responsibility of the Contractor to notify the above named departments and persons.

1-07.23(3) Notifying Property Owners (New Section)

The following new section shall be added to the Standard Specifications:

When construction activities will affect ingress and egress to a property along the project alignment, the Contractor shall be responsible for notifying the occupant/occupants of the property 24 hours prior to the construction activity beginning. If personal contact with the occupant is not possible, the Contractor shall leave written notification.

1-07.29 SAFETY STANDARDS (NEW SECTION)

The following new section shall be added to the Standard Specifications:

All work shall be performed in accordance with all applicable local, state, and federal health and safety codes, standards, regulations, and/or accepted industry standards. It shall be the responsibility of the Contractor to ensure that his work force and the public are adequately protected against any hazards.

The City of Zillah or Developer shall have the authority at all times to issue a stop work order at no penalty if, in their opinion, working conditions present an undue hazard to the public, property, or the work force. Such authority shall not, however, relieve the Contractor of responsibility for the maintenance of safe working conditions or assess any responsibility to the City or Developer for the identification of any or all unsafe conditions.

1-08 PROSECUTION AND PROGRESS

1-08.3 PROGRESS SCHEDULE

The provisions of SECTION 1-08.3 of the Standard Specifications, Division One shall be supplemented with the following:

Prior to the commencement of any work, a preconstruction conference shall be held. The Contractor or Developer shall contact the City of Zillah and set a date and time for the meeting. It shall be the responsibility of the Contractor/Developer to notify and invite all parties having an interest in the project to the meeting.

At this conference all points of the approved Plans and Specifications will be open to discussion including scope, order and coordination of work, equipment lead time required, means and methods of construction, inspection and reporting procedures, etc. The Contractor should satisfy himself that all provisions and intentions of the work are fully understood.

The Contractor shall prepare and submit to the City and Developer at the Preconstruction Conference a Construction Progress and Completion Schedule using a bar graph format. Items in the Schedule shall be arranged in the order and sequence in which they will be performed. The schedule shall be drawn to a time scale, shown along the base of the diagram, using an appropriate measurement per day with weekends and holidays indicated. The Construction Progress Schedule shall be continuously updated and, if necessary, redrawn upon the first working day of each month or upon issuance of any Change Order which substantially affects the scheduling. Copies (2 prints or 1 reproducible) of newly updated Schedules shall be forwarded to the City and Engineer, as directed, immediately upon preparation.

1-10 TEMPORARY TRAFFIC CONTROL

This section is supplemented with the following:

The provisions of the latest edition of the Manual on Uniform Traffic Control Devices for Streets and Highways and amendments thereto published by the U.S. Department of Transportation, Federal Highway Administration, and WSDOT by this reference are made a part of these Documents.

1-10.2(2) Traffic Control Plans

Delete the entire section and replace with the following:

The Contractor shall prepare a signing plan showing the necessary Class A and B construction signing, barricades, and traffic control devices required for the project and submit it to the Consultant and City for review no later than the preconstruction conference date. When the Class B signing for a particular area will be provided as detailed on one or more of the figures included in the MUTCD without modification, the Contractor may reference the applicable MUTCD figure at the appropriate location on the Plan. When this procedure is used, variable distances such as minimum length of taper must be specified by the Contractor.

The signing plan prepared by the Contractor shall provide for adequate warning within the limits of the project and on all streets, alleys, and driveways entering the project so that approaching traffic may turn left or right onto existing undisturbed streets before reaching the project. The Plan shall be prepared to create a minimum of inconvenience for pedestrian and vehicle traffic.

All modifications to the accepted signing plans shall be reviewed by the City.

1-10.3(3)A Construction Signs

The first sentence of the first paragraph is revised to read:

All signs, barricades, flashers, cones, traffic safety drums, barricades, and other traffic control devices required by the approved traffic control plan(s), as well as any other appropriate signs prescribed by the City or County, shall be furnished and maintained by the Contractor.

Open trenches shall be provided with proper barricades and at night they shall be distinctly indicated by adequately spaced lights.

CHAPTER 4 - WATER SYSTEM IMPROVEMENTS

GENERAL REQUIREMENTS FOR WATER SYSTEM IMPROVEMENTS

All extensions and additions to the City of Zillah's domestic water system shall conform to the design and construction standards of the City of Zillah and the Washington State Department of Health (WSDOH) as follows:

All new lots and developments shall be served by a public water supply line to be maintained by the City of Zillah and located adjacent to the lot or development site. The water supply line shall be capable of providing sufficient flow and pressure to satisfy the fire flow and domestic service requirements of the proposed lots and development requirements.

Water lines shall be extended by the Developer to the point where the adjoining property owner's responsibility for further extension begins. This typically requires an extension across the entire frontage of the property to the property line of the adjoining owner. In some cases, it will require dedication of an easement and a line extension across the property or extension across two or more sides of the developing property. Extensions will be consistent with and implement the City's adopted Comprehensive Water Plan.

All new public domestic water mains shall be a minimum diameter of 8-inch. Fire hydrant runs less than 50 feet from the water main to the fire hydrant shall be a minimum of 6-inch.

New water mains shall be located in existing or proposed streets and shall be offset from the street centerline and not located within a vehicle wheel path.

Larger public water mains may be required depending upon fire flow requirements as determined by the City of Zillah's Public Works Director, Fire Chief or City Engineer.

Water main oversizing, above that required for the particular development being submitted, may be required by the City of Zillah to be installed for future extension. The cost of the materials only for the oversizing shall be reimbursed to the Developer by the City. The Developer shall submit actual material invoices showing the actual cost of the materials furnished and the cost of the same materials of the size required for the development.

All domestic water mains shall be looped, where possible. Temporary dead-end mains over 500 feet in length will only be allowed where future water main looping via public right of way will be assured. No permanent dead-end water mains over 500 feet in length will be allowed to be part of the City of Zillah's domestic water system.

Maximum valve spacing in public water mains will be 750 linear feet. Valves will be furnished and installed on all legs of new water main intersections.

All water service lines, meter box and meter setters shall be installed by the Developer/Contractor.

All new water meters shall be a minimum of 3/4-inch and shall be furnished and installed by the City of Zillah and paid for by Developer.

Only one water service meter shall be served from each main tap. All taps shall be made under the supervision of the Public Works Director or his designee.

Fire hydrants shall be spaced at least every 300' in all zones. Additional hydrants may be required to protect structures as determined by the Fire Chief and Public Works Director. Additional fire hydrants required on a site may require a looped, on-site fire hydrant main. Easements will be provided for all on-site, public, looped water mains, in accordance with Chapter 1, Section 11.

Water and sewer mains shall be separated in accordance with Section C1-9.1 of the Criteria for Sewage Works Design, December 1998, by the Washington State Department of Ecology.

The design of water mains and appurtenances is subject to review and approval by the City of Zillah Director of Public Works. The Director of Public Works may, at his discretion, adjust these Standards as necessary to facilitate installation of water lines and appurtenances for the health, safety, and protection of the general public.

Irrigation Systems

The proposed development shall be served by a separate irrigation water distribution system with an individual service for each lot. The irrigation system shall be designed by a professional and constructed in accordance with Sunnyside Valley Irrigation District, the Zillah Irrigation District, and City of Zillah Construction Standards. All irrigation pipelines under roadways shall meet the requirements of Section 9-30.1(5)A (AWWA C900 or C905). Pipe not under the roadway may meet the requirements of Section 9-05.12 (PVC solid wall ASTM D 3034 SDR35) for gravity systems or 9-15.1(2) (ASTM D1784, 200 psi, SDR21) for pressurized systems. All irrigation pipe shall be installed with a minimum cover of 30 inches, pipe zone bedding and backfill per Standard Detail SS-5, and with a 3-inch wide magnetic marking tape 9 inches above the pipe.

SPECIAL PROVISIONS FOR WATER SYSTEM IMPROVEMENTS

The following sections of the WSDOT Standard Specifications have been amended or supplemented as described below and apply to public works improvements within the City of Zillah.

7-09 WATER MAINS

7-09.2 MATERIALS

Section 7-09.2 of the Standard Specifications shall be revised as follows:

Water Main pipe shall be either:

Ductile Iron, conforming to the requirements of Section 9-30.1(1) of the Standard Specifications, except that it shall be Standard Thickness Class 52. Joints shall be rubber gasket, push-on type (Tyton Joint). Fittings shall be mechanical joint or flanged, as shown on the Plans, and shall conform to Section 9-30.2(1) of the Standard Specifications.

OR

Polyvinyl Chloride (PVC) Pipe conforming to the requirements of Section 9-30.1(5)A (AWWA C900 or C905). Fittings shall be the same as specified for Ductile Iron pipe.

PVC pipe must be installed with size 12 Blue plastic coated solid copper tracer wire on the top of the pipe.

Delete entire Aggregates Sub-Section and replace with the following:

Bedding Materials (Flexible Pipes)	9-03.9(3) Crushed Surfacing Top Course
Bedding Materials (Rigid Pipes)	9-03.12(3) Gravel Backfill for Pipe Zone Bedding
Imported Select Backfill	9-03.9(3) Crushed Surfacing Base Course

7-09.3(5) Grade and Alignment

The first sentence of the third paragraph is replaced with the following:

The depth of trenching for water mains shall be such to provide a minimum cover of 4 feet and a maximum cover of 6 feet, unless otherwise approved by the Director of Public Works.

7-09.3(9) Bedding the Pipe

Add the following:

Imported pipe zone bedding for rigid pipe shall be Crushed Surfacing Top Course or Gravel Backfill, placed and compacted in layers per the Standard Specifications. Use as directed by the Engineer.

Imported pipe zone bedding for flexible pipe shall be Crushed Surfacing Top Course, placed and compacted per the Standard Specifications. Bedding shall be placed under all flexible pipe.

7-09.3(10) Backfilling Trenches

Add the following:

Street crossing trenches and other locations where directed shall have the trench backfilled full depth with Imported Select Backfill. The Director of Public Works may require the use of Controlled Density Fill (CDF) for trench backfill in certain circumstances. The requirements for CDF are set forth in Chapter 7, Section 8-30 of these Special Provisions.

Mechanical compaction to 95% of maximum density is required for all trenches. The Developer/Contractor shall be responsible for scheduling and paying for all testing required.

7-12 VALVES FOR WATER MAINS

7-12.2 MATERIALS

Add the following:

All valves sizes 3-inch through 10-inch shall be gate valves and shall conform to the latest revision of AWWA Resilient Seated Gate Valves Standard C509 and AWWA C104.

All gate valves shall have non-rising stems, open counterclockwise, and shall be provided with a 2-inch square AWWA operating nut. Gate valves 4-inch and larger shall have mechanical joint connections.

All valves sizes 12 inches and larger shall be butterfly valves suitable for direct burial and shall be rubber seated and conform to the latest revision of AWWA Standard C504 Class 150B and C104.

Valve operators shall be worm gear type, sealed, gasketed, and lubricated for underground service. All valves shall open counterclockwise and shall be provided with a 2-inch square AWWA operating nut.

Valve Boxes shall be two piece adjustable. The top section shall be similar to Olympic Foundry Model 940-B, or equal, 18-inches high. The bottom section shall be a Olympic Foundry Model R-36, or equal, 36-inches high. Extension sections shall be Olympic Foundry Model 044, or equal, 12-inches high.

7-14 FIRE HYDRANTS

7-14.2 MATERIALS

Replace the entire Section with the following:

The City of Zillah accepts fire hydrants of the following manufacturers, providing the hydrants conform to the City's technical specifications for fire hydrants:

Mueller Centurion
M & H 929 Reliant

All hydrants shall have a Main Valve Opening (MVO) of 5-1/4" and one port with a 5" Storz Quick Coupling and two (2) 2-½" diameter ports. Threads on all ports shall be National Standard Thread.

7-14.3(1) Setting Hydrants

Add the following:

The hydrant shall be set to the correct elevation on a concrete block base measuring 12" x 12" x 6" thick, which has been placed on undisturbed earth. Around the base of the hydrant, the Contractor shall place 0.35 cubic yards of "Gravel Backfill for Drywells" per Section 9-03.12(5) to allow free drainage of the hydrant.

The hydrants will be painted a color approved by the City.

7-14.3(2) Hydrant Connections

Add the following:

Hydrant runs of less than 50 feet shall be connected to the main with 6-inch minimum diameter water main. Each hydrant lateral shall include an auxiliary gate valve and valve box.

7-14.3(2)A Hydrant Restraint

Add the following:

The Contractor shall securely connect the hydrant to the water main as indicated on the Standard Detail.

7-14.3(2)C Hydrant Guard Posts

The Director of Public Works may determine that four (4) 6-inch diameter Sch. 40 steel guard posts be installed at a hydrant location. The posts will be painted the same color as the hydrants.

7-15 SERVICE CONNECTIONS

7-15.1 GENERAL

This work consists of the relocation of existing water meters, meter setters, and water meter boxes, where necessary, and the installation of new saddles, corp stops, service pipe, water meter boxes and meter stops and setters as shown on the Plans.

7-15.2 MATERIALS

SECTION 7-15.2 of the Standard Specifications shall be revised as follows:

Saddle: New service tapping saddles shall be ROMAC D. I. service saddle with double stainless steel straps or approved equal.

Corporation Stop: New corp stops shall be Ford type 1001 or approved equal.

Service Line: New service pipe shall be Crosslinked Polyethylene (PEX) Tubing meeting ASTM F876/F877 specifications and ANSI/NSF Standard 14/61.

Meter Box: Mueller/McCullough Coil Type Setter, style 15, with 2" insulation pad and non-locking lid.

Pipe Bedding and Select Backfill: The imported pipe bedding and select backfill to be utilized for trench backfill as directed by the Engineer or Public Works Director shall be in accordance with SECTION 7-09 of these Special Provisions.

7-15.3 CONSTRUCTION DETAILS

Add the following:

The Contractor shall set the meter box to the finished grade of the area. The Contractor will be required to reset the meter box if it is not at finished grade at the completion of the project. The completed water service shall be tested at system operating pressure by the Contractor and must show no signs of leakage.

Future water services shall be marked with an 18" long section of #4 rebar buried vertically with the top of the rebar set 6" below the finish surface.

CHAPTER 5 - SANITARY SEWER SYSTEM IMPROVEMENTS

GENERAL REQUIREMENTS FOR SANITARY SEWER LINES

All extensions to the City's sanitary sewer system shall conform to the design standards of the City of Zillah, the Washington State Department of Ecology, and be designed by a licensed professional Engineer as follows:

All new lots and developments shall be served by a public sanitary sewer line adjacent to the lot or development site.

Sewer lines shall be extended by the Developer to the point where the adjoining property owner's responsibility for further extension begins. This typically requires an extension across the entire frontage of the property to the property line of the adjoining owner. In some cases, it will require dedication of an easement and a line extension across the property or extension across two or more sides of the developing property. Extensions will be consistent with and implement the City's adopted Comprehensive Sewer Plan.

Sewer lines shall be located in streets to serve abutting properties. When necessary, sewer lines may be located within public easements. Lines located in streets will be offset from the street centerline and not located within a vehicle wheel path. Sewer lines located in easements shall generally be located in the center of the easement, but may, with the approval of the Director of Public Works, be offset to accommodate the installation of other utilities or to satisfy special circumstances.

The minimum size for public sewer lines is eight (8) inches in diameter. The developer's sewer system must provide capacity for the proposed development, but must also provide capacity for future extensions.

Sewer lines shall be terminated with a manhole. In special circumstances, a flush-end (cleanout) may be installed on the end of a sewer main extension, provided the end is no further than 150 feet from the last manhole and the sewer main line and grade will permit further extension.

Manholes shall be installed at intervals of no greater than 350 feet and at all vertical and horizontal angle points in the sewer main.

Each building containing sanitary sewer facilities shall be served by a separate private side sewer line. Branched side sewers serving multiple buildings and properties shall not be permitted. Side sewers serving multi-unit buildings are permitted.

Side sewers shall be installed in accordance with the Uniform Plumbing Code (UPC) and subject to review and approval by the City of Zillah Building Inspector. Water and sewer lines shall not be laid in the same trench, except as provided in Section 1008 of the UPC and with written approval of the City of Zillah Building Inspector.

Sewer lines shall be designed for gravity flow operation. Lift stations and force mains shall be limited to those locations and circumstances where they are consistent with the Comprehensive Sewer Plan and are the only viable solution to serve the proposed development and other properties in the vicinity. Lift stations and force mains shall be designed by a Professional Civil Engineer licensed in the State of Washington.

The design of sewer lines and appurtenances is subject to review and approval by the City of Zillah Director of Public Works. The Director of Public Works may, at his discretion, adjust these Standards as necessary to facilitate installation of sewer lines and appurtenances for the health, safety, and protection of the general public.

SPECIAL PROVISIONS FOR SANITARY SEWER SYSTEM IMPROVEMENTS

All construction work shall be performed in accordance with the Standard Specifications and these sections that have been amended or supplemented as described below.

7-05 MANHOLES, INLETS, CATCH BASINS, AND DRYWELLS

7-05.2 MATERIALS

Add the following:

Sanitary Sewer Manholes shall be gasketed and constructed of 48-inch diameter reinforced precast concrete manhole sections in conformance with the requirements of Section 9-12.4. The base and first barrel section shall be precast monolithically with preformed channels.

Joints in the manhole sections shall be watertight and shall be a rubber ring compression joint complying with ASTM C443, a flexible, plastic gasket, or approved equal.

Manhole frames and covers shall be manufactured in the United States and be cast iron with a combined weight of not less than 400 pounds and have a clear opening of 24 inches. The frames and covers shall be the manufacturer's stock pattern capable of withstanding, with appropriate margin of safety, an H20 loading. Covers shall have a 1-inch hole only, unless otherwise noted, and the top shall be flat with a non-skid pattern and marked "SEWER." The contact surfaces of the frames and covers shall be machine finished to a common plane or have other adequate provision to prevent rocking.

7-05.3 CONSTRUCTION REQUIREMENTS

Add the following:

The design and construction of all manholes shall provide for a 0.10 foot vertical drop through the manhole.

Manhole coupling adaptors may be precast in the manhole to accept PVC pipe, provided diameters match. No field grouting of pipe into manholes will be allowed. Pipe connections at manholes must be gasketed and must be flexible. "A-Lok" gasket system or approved equal may be used as an alternate to the manhole coupling adapter.

7-05.3(1) Adjusting Manholes and Catch Basins to Grade

Delete and replace with the following:

Manholes, valve boxes and similar utility appurtenances and structures shall not be adjusted until the pavement is completed, **at which time the center of each structure shall be relocated from references previously established by the Contractor**.

The asphalt pavement shall be cut and removed to a neat circle, the diameter of which shall be equal to the outside diameter of frame plus 2 feet. The frame shall be placed on cement concrete blocks or adjustment rings and wedged up to the desired grade. The base materials shall be removed and Class 3000 cement concrete shall be placed within the entire volume of the excavation up to, but not to exceed, 1½ inches below the finished pavement surface.

On the following day, the concrete, the edges of the asphalt pavement, and the outer edge of the casting shall be painted with hot liquid asphalt. Class 3/8" HMA shall then be placed and compacted with hand tampers and a patching roller.

The completed patch shall match the existing paved surface for texture, density, and uniformity of grade. The joint between the patch and the existing pavement shall then be painted with hot liquid asphalt or asphalt emulsion and shall be immediately covered with dry paving sand before the HMA solidifies.

7-05.3(2) Abandon Existing Manholes

Replace the entire section with the following:

Where shown on the Plans, existing sanitary sewer manholes shall be abandoned in place after the new sanitary sewer collection system is in place and all side sewers have been transferred to the new sanitary sewer pipeline. The following new section shall be added to the Standard Specifications:

At least the top 3 feet of each manhole, or the top conical section in precast concrete manholes, shall be removed, including the cast iron ring and cover and concrete pad, if any. Debris resulting from breaking of the upper portion of the manhole may be mixed with backfill subject to the approval of the Engineer. Ring and cover will become property of the Contractor and all other surplus material shall be disposed of.

The existing pipe openings shall be plugged watertight with Class 3000 concrete and the manhole bottom slabs shall be broken to promote drainage. The remaining manhole structure shall be backfilled with granular material conforming to SECTION 9-03.9(3) CRUSHED SURFACING BASE COURSE. Place backfill in uniform layers and compact to 95% maximum dry density, as determined by ASTM D 1557 (Modified Proctor).

Excavations resulting from manhole abandonment shall be backfilled with suitable, job-excavated material to top of subgrade. Compact to 95% maximum dry density as determined by ASTM D 698 (Standard Proctor). Restore surface to the condition existing prior to excavation with native material, gravel surfacing, or asphalt concrete pavement, as shown for trench repair on the Plans.

7-08 GENERAL PIPE INSTALLATION REQUIREMENTS

7-08.1 GENERAL

Add the following:

The Contractor shall notify the Utility Notification Center (One Call Center) at least 48 hours prior to start of excavation so that underground utilities may be marked. Telephone number is 1-800-424-5555.

All construction work shall be inspected by the City of Zillah prior to backfilling. At least 48 hours notice shall be given to the City Public Works Department prior to backfilling.

7-08.3(1)C Bedding the Pipe

Add the following:

The imported pipe zone bedding to be utilized for the trench backfill shall be Crushed Surfacing Top Course in conformance with Section 9-03.9(3), placed and compacted in layers as designated by the Public Works Director.

7-08.3(2)B Pipe Laying - General

Add the following:

All sewer pipe shall be installed with 3-inch wide magnetic marking tape as detailed in Standard Detail SS-5 and Section 9-15.18.

7-08.3(3) Backfilling

Add the following:

Street crossing trenches and other locations, where directed, shall be backfilled for the full depth of the trench with Imported Select Backfill conforming to Section 9-03.9(3) Crushed Surfacing Base Course. The Director of Public Works may require the use of Controlled Density Fill (CDF) for trench backfill in certain circumstances. The requirements for CDF are set forth in Chapter 7, Section 8-30 of these Special Provisions.

Mechanical compaction shall be required for all trenches. The density of the compacted materials shall be at least 95% of the maximum density as determined by ASTM D 698 Test (Standard Proctor). The Developer/Contractor shall be responsible for scheduling and paying for all testing required.

7-17 SANITARY SEWERS

7-17.2 MATERIALS

Sanitary Sewer Pipe approved for the City of Zillah shall be:

PVC Sewer Pipe (Gravity): Polyvinyl Chloride Pipe with flexible gasketed joints shall conform with the requirements of Section 9-05.12 of the Standard Specifications (ASTM D3034, SDR 35). Pipe joint type for restrained gasket.

PVC fittings for PVC sewer pipe such as tees, wyes, elbows, plugs, caps, etc., shall be flexible gasket joint fittings acceptable for use and connection to PVC sewer pipe.

7-18 SIDE SEWERS

7-18.3 CONSTRUCTION REQUIREMENTS

7-18.3(1) General

Add the following:

Side sewer connections shall be constructed in accordance with the City's Standard Detail with a minimum of 36 inches of cover. This provision may be waived by the Director of Public Works under special circumstances; however, under no circumstances shall the side sewer be laid with less than 18 inches of cover.

Side sewers shall be a minimum of 4-inches in diameter. Larger sizes, if required, will be approved by the Director of Public Works on a case by case basis.

CHAPTER 6 - STORMWATER IMPROVEMENTS

GENERAL REQUIREMENTS FOR STORMWATER IMPROVEMENTS

All extensions and additions to the City of Zillah's storm sewer (storm drain) system shall conform to the following design standards and requirements of the City.

All new storm drainage facilities, public or private, shall be designed by a Professional Civil Engineer licensed in the State of Washington in accordance with the Department of Ecology Eastern Washington Stormwater Management Manual. Complete stormwater runoff and drainage facilities sizing calculations shall be submitted to the City of Zillah for review and comment. Storm sewer facilities and pipelines shall be designed to meet a minimum 25-year storm criteria, and both the long duration storm and short duration storm shall be considered in the design.

Storm runoff occurring on all new lots and developments (private property) shall be retained and disposed of on-site. No storm runoff from private property will be allowed to enter public property or public storm drainage system.

Storm runoff for new public streets shall be designed and constructed as required to the point where the adjoining property owner's responsibility for further extension begins. This typically requires an extension across the entire frontage of the property to the property line of the adjoining owner.

All storm sewer designs for new public streets shall be based upon an engineering analysis which takes into account total drainage areas, runoff rates, pipe and inlet capacities, and any other factors pertinent to the design

All stormwater facilities shall have oil and silt separation.

Inlet spacing shall be designed in accordance with the WSDOT Hydraulics Manual, Chapter 5. Generally, inlet spacing shall not exceed 300 feet. There shall be installed a manhole or Type II Catch Basin at the intersection of two collector storm sewers. A collector storm sewer is a system servicing more than one catch basin.

SPECIAL PROVISIONS FOR STORM SEWERS AND DRAINAGE

The following Sections of the Standard Specifications have been amended or supplemented as described below:

7-02 CULVERTS

7-02.4 MATERIALS

Add the following:

Culvert pipe approved for use on this project shall be as follows:

Corrugated Aluminum Alloy Culvert Pipe meeting the requirements of SECTION 9-05.5 of the Standard Specifications.

OR

Aluminized Corrugated Steel Culvert Pipe meeting the requirements of SECTION 9-05.4 of the Standard Specifications.

7-04 STORM SEWERS

7-04.2 MATERIALS

Add the following:

The storm sewer (drain) pipe approved for use on this project shall be as follows:

15-INCH THROUGH 36-INCH PIPE

Corrugated Aluminum Alloy Storm Sewer Pipe: All corrugated aluminum alloy storm sewer pipe shall comply with the requirements specified in SECTION 9-05.11 of the Standard Specifications and shall be 16 gauge with helical corrugations. A protective coating shall not be required. All corrugated metal pipe joints shall be flexible using rubber gasket joints. Gaskets shall be made of 3/8-inch thick by 12-inch minimum width closed cell synthetic sponge rubber, per ASTM D 1056, Grade SCE-43, fabricated in the form of a cylinder with a diameter of approximately 10 percent less than the nominal pipe size. The gasket shall be centered under the band and lapped an equal distance on the ends of the adjoining pipe sections. Coupling bands shall be used and shall conform to the provisions of SECTION 9-05.11(1) of the Standard Specifications. Coupling bands shall be made by the same manufacturer as the pipe and shall be made of the same base material as the pipe which it connects.

PE Pipe: Corrugated High Density Polyethylene (CPEP) pipe, couplings, and fittings shall comply with the requirements of SECTION 9-05.20 of the Standard Specifications.

12-INCH AND SMALLER PIPE

PVC Pipe: Polyvinyl chloride (PVC) pipe shall conform with requirements specified in SECTION 9-05.12 of the Standard Specifications (ASTM D 3034, SDR 35). The pipe joint type shall be restrained gasket.

OR

PE Pipe: Corrugated High Density Polyethylene (CPEP) pipe, couplings, and fittings shall comply with all the requirements of Section 9-05.20. Joints shall be water-tight.

Pipe shall be as manufactured by Hancor, Advanced Drainage Systems, Inc., or approved equal.

The perforated underdrain pipe for infiltration trenches approved for use shall be as follows:

PE Pipe: Perforated Corrugated High Density Polyethylene (CPEP) underdrain pipe, couplings, and fittings shall comply with all the requirements of SECTION 9-05.2(8) of the Standard Specifications.

DRAIN ROCK: Drain rock for use as backfill for the perforated underdrain pipe in infiltration trenches shall be clean coarse aggregate conforming to the requirements for "Gravel Backfill for Drywells" as specified in SECTION 9-03.12(5) of the Standard Specifications.

7-04.3(1) Cleaning and Testing

7-04.3(1)A General

No infiltration or exfiltration test will be required for the storm drain pipe.

7-05 MANHOLES, INLETS, CATCH BASINS, AND DRYWELLS

7-05.2 MATERIALS

Section 7-05.2 of the Standard Specifications shall be revised as follows:

Gravel Backfill for Drywells: Gravel backfill for drywells shall be as specified in Section 9-03.12(5) of the Standard Specifications.

Manhole Metal Castings: All cast iron frames and covers shall be manufactured in the United States and as specified in SECTION 9-05.15(1) of the Standard Specifications. All cast iron frames and covers to be used on this project shall be of the type, weight, and size approved by the City of Zillah, and shall be furnished by the Contractor. Covers for sanitary sewer shall be stamped "SEWER." Covers for storm drain shall be stamped "STORM."

Precast Concrete Catch Basin: Catch basins shall be WSDOT Type I, IL or 2 and constructed as shown on the City Standard Details.

Catch Basin Metal Castings: All frames and grates shall be capable of withstanding, with a reasonable margin of safety, a concentrated load of 20,000 pounds and shall be as specified in SECTION 9-05.15(2) of the Standard Specifications and Standard Plans B-30.10, B-30.30, B-30.40, and B-30.50. The contact surfaces of the frame and grate shall be machine finished to a common plane and shall be so cast as to prevent rocking.

CHAPTER 7 - STREET IMPROVEMENTS

GENERAL REQUIREMENTS FOR STREET IMPROVEMENTS

All new street design and construction must conform to these design standards of the City of Zillah and Chapter 16.28.020, 16.32 and 17.22 of the Zillah Municipal Code and the latest edition of the Standard Specifications.

TRAFFIC STUDIES

In order to provide sufficient information to assess a development's impact on the transportation system and level of service, the Director of Public Works may require a traffic study to be completed by the Developer at the Developer's expense. This decision will be based upon the size of the proposed development, existing roadway condition, existing and expected, traffic volumes, accident history, expressed community concern, and other factors relating to transportation. Traffic studies shall be conducted under the direction of a traffic engineer or civil engineer licensed in the State of Washington and possessing special training and experience in traffic engineering. The level of detail and scope of the traffic study may vary with the size, complexity, and location of the proposed development. A traffic study shall, at a minimum, be a thorough review of the immediate and long-range effects of the proposed development on the City's transportation system. Guidelines for the traffic study shall be reviewed by the Director of Public Works on a project basis. However, the ADT for the development shall be estimated using the trip generators found in the latest edition of the Trip Generation Manual published by ITE.

STREET DESIGN REQUIREMENTS

Major Collector arterial streets serve as the high volume corridors that connect the major traffic generators and shall be designed with a seventy (70) foot wide Right of Way and forty-six (46) foot wide roadway surface face of curb to face of curb. Face of Curb Radius shall be a minimum of 50 feet and the street centerline radius shall be designed to a minimum 40 mph design speed or as approved by the Director of Public Works.

Minor Collector arterial streets shall be designed with a sixty (60) foot wide Right of Way and a forty (40) foot wide roadway surface curb to curb. Face of Curb Radius shall be a minimum of thirty (40) feet and the street centerline radius shall be designed to a minimum 35 mph design speed or as approved by the Director of Public Works.

Local Access (Residential) streets shall be designed with a minimum fifty (50) foot wide Right of Way and thirty-two (32) foot wide roadway surface curb to curb when on-street parking is prohibited, and a thirty-seven (37) foot wide roadway surface curb to curb when on-street parking is permitted. Face of Curb Radius shall be a minimum of twenty-five (25) feet and street centerline radius shall be designed to a minimum of 30 mph design speed or as approved by the Director of Public Works.

The maximum length of a cul-de-sac street shall be 500 feet measured along the street centerline from the nearest street intersection to the throat of the cul-de-sac. Where it is not feasible to construct a cul-de-sac turnaround, the City may allow the use of an "L" or "Tee" turnaround upon approval.

Street jogs with centerline offsets of less than one hundred twenty-five (125) feet shall be avoided. Collector arterials centerline angle point deflections of more than ten (10) degrees shall require the design of a curve. A tangent at least 200 feet long shall be introduced between reverse curves on Collector arterials.

Street grades shall be kept to a maximum of six (6) percent for Major Collectors, eight (8) percent for Minor Collectors and twelve (12) percent for Local Access streets. The minimum grade for all streets shall be three-tenths (0.3) percent.

Cement concrete traffic curb and gutter and sidewalks along both sides shall be installed along all new streets unless otherwise approved by the City of Zillah. Mountable curb is allowable for local access streets in subdivisions, except for the curb return and 20 feet beyond at an intersection radius where the curb shall be full height.

Driveways shall be located on the lowest classification of roadway abutting the development. Driveways accessing onto Collectors are discouraged and shall be limited. Driveway widths and locations are limited to one per lot as approved by the Director of Public Works. "Corner" lots shall have the driveway located as far from the street intersection as possible.

A street light shall be installed at each street intersection, at mid block, no more than one hundred seventy-five (175) feet apart, and at ends of culs-de-sac. Street lights shall meet the design and placement requirements of these Standards and the City Public Works Director and the local electric utility.

Installation of a monument case cover and monument caps at the centerline of street intersects angle point and points of curves and at other locations as directed by the Director of Public Works is required in new developments.

Traffic control signs, posts and post sleeves shall be provided and installed by the developer in accordance with the MUTCD and City Standards.

SPECIAL PROVISIONS FOR STREET IMPROVEMENTS

The following sections of the Standard Specifications have been amended or supplemented as described below.

2-03 ROADWAY EXCAVATION AND EMBANKMENT

2-03.3(14)C Compacting Earth Embankments

All embankment construction shall be compacted by Method "C" as specified in the above section.

2-03.3(14)D Compacting and Moisture Control Tests

The contractor shall notify the City and Consultant when the subgrade is ready for in-place density tests and the materials testing firm will be on the site. Placement of aggregate courses shall not proceed until density requirements are met. The Developer/Contractor shall be responsible for scheduling and paying for all testing.

2-07 WATERING

2-07.1 DESCRIPTION

The Contractor shall be solely responsible for dust control on the Developer's project and shall protect the adjacent property, homes and businesses, orchards, crops and school yards from dust by whatever means necessary. The Contractor shall be responsible for any claims for damage or dust impacts and shall protect the City and the Developer from all such claims.

When directed by the City, the Contractor shall provide and apply water within two hours of such an order, including on weekends and holidays.

5-04 HOT MIX ASPHALT

5-04.2 MATERIALS

This section is supplemented with the following:

The Class of Hot Mix Asphalt used for asphalt pavement shall be HMA Class 1/2" with grade PG 64-28 asphalt binder.

5-04.3(3) HMA Pavers

This section is supplemented with the following:

The asphalt paver that is utilized on the Developer built streets shall be capable of spreading and finishing courses of HMA plant mix in a width from center line of the roadway to the edge of the gutter in one single pass.

5-04.3(7)A Mix Design

General

This section is supplemented with the following:

The Contractor may submit for acceptance an approved WSDOT mix design for the class of HMA specified in the contract if the mix design has been approved within the previous twelve month period using aggregate and asphalt binder from the same sources. The Contractor shall provide the mix design to the City at least fifteen (15) working days prior to any paving.

Delete Paragraph 1 in Subsection 2. **Statistical or Nonstatistical Evaluation**. The Contractor shall be responsible for the verification of the mix design.

5-04.3(8)A Acceptance Sampling And Testing – HMA Mixture

Subsection 1 is deleted and replaced with the following:

1. **General**. Acceptance of HMA shall be as provided under Nonstatistical or Commercial evaluation.

   Commercial evaluation will be used for Commercial HMA and for other classes of HMA in the following applications: sidewalks, road approaches, ditches, slopes, paths, trails, gores and other nonstructural applications as approved by the Engineer. Sampling and testing of HMA accepted by commercial evaluation will be at the option of the Engineer. The proposal quantity of HMA that is accepted by commercial evaluation will be excluded from the quantities used in the determination of Nonstatistical evaluation.

   Commercial HMA can be used for patching utility or conduit trenches less than 24 inches in width.

5. **Test Results**. Paragraph 1 is deleted and replaced with the following:

HMA not meeting the quality and density requirements of the Specifications shall be rejected.

5-04.3(9) Spreading And Finishing

Section 5-04.3(9) of the Standard Specifications is revised with the following:

Unless otherwise approved by the Engineer, the nominal compacted depth of any layer of HMA Cl. 1/2-inch and Cl. 3/4-inch shall not exceed 0.25 feet.

5-04.3(10) Compaction

5-04.3(10)B Control

Section 5-04.3(10)B of the Standard Specifications is deleted and replaced with the following:

HMA used in traffic lanes, including lanes for ramps, truck climbing, weaving, and speed change, and having specified compacted course thickness greater than 0.10 foot, shall be compacted to a specified level relative density. The specified level of relative density shall be a minimum of 91.0 percent of the reference maximum density as determined by WSDOT for AASHTO T 209. The reference maximum density shall be determined as the moving average of the most recent five determinations for the lot of HMA being placed. The specified level of density attained will be determined by five nuclear gauge tests taken in accordance with WAQTC FOP TM8 and WSDOT SOPT 729 on the day the mix is placed (after completion of the finish rolling) at locations determined by the stratified random sampling procedure conforming to WSDOT Test Method 716 within each density lot. The quantity represented by each density lot will be no greater than a single day's production or approximately 400 tons, whichever is less. The Engineer will furnish the Contractor with a copy of the results of all acceptance testing performed in the field within one working day.

In addition to the randomly selected locations for tests of density, the Engineer may also isolate from a normal lot any area that is suspected of being defective in relative density. Such isolated material will not include an original sample location. A minimum of 5 randomly located density tests will be taken.

Control lots not meeting the minimum density standard shall be removed and replaced with satisfactory material.

HMA constructed under conditions other than those listed above shall be compacted on the basis of a test point evaluation of the compaction train. The test point evaluation shall be performed in accordance with instructions from the Project Engineer. The number of passes with an approved compaction train, required to attain the maximum test point density, shall be used on all subsequent paving.

5-04.3(11) Reject HMA

This section is supplemented with the following:

Delete all references to Combined Pay Factor (CPF). HMA not meeting the quality and density requirements of the Specifications shall be rejected.

5-04.3(13) Surface Smoothness

This section is supplemented with the following:

Where directed by the Engineer, the Contractor shall feather the HMA pavement in a manner to produce a smooth-riding connection to the existing pavement.

HMA Cl. 3/8-inch shall be utilized in the construction of the feathered connections to existing pavement.

All utility appurtenances such as manhole covers, catch basins, and valve boxes shall be adjusted to finished grade in accordance with the procedure in Section 7-05.3(1) in Chapter 5.

5-04.3(19) Sealing Of Pavement Surfaces

This section is supplemented with the following:

Revise the first sentence to read: "The Contractor shall apply a fog seal to all travel lanes and allow it to cure prior to opening the lane to traffic, when the wearing course is placed after October 1 and before April 1."

8-04 CURBS, GUTTERS, AND SPILLWAYS

8-04.3(1) Cement Concrete Curbs, Gutters, And Spillways

This section is supplemented with the following:

Cement concrete traffic curb and gutter shall be as shown on the City's Standard Plans. Full Height or "Barrier" cement concrete traffic curb and gutter as shown shall be used on the roadway as shown on the Plans. Depressed or "Driveway" cement concrete traffic curb and gutter as shown shall be used at all driveway entrances and sidewalk ramp locations as shown on the Plans and as directed in the field by the Engineer. Mountable or "Rolled" curb shall be used on the roadway as shown on the Plans. Cement concrete curb and gutter which does not comply with the City's details shall be removed and replaced at the Contractor's expense.

A template shall be required to be placed at the back of curb for construction of driveway transitions from Barrier to Driveway or Rolled curb and gutter. The template shall extend from the bottom of curb to the top of the curb, and shall have a minimum length of 8 feet, with the 6-foot long transition centered in the template. The Contractor shall also be required to use a template at the back of Driveway/Depressed curb and gutter to ensure a straight and uniform back of curb in conformance with the Standard Plan.

The new concrete curb and gutter shall be cured in accordance with SECTION 5-05.3(13)B of the Standard Specifications. Application of the curing compound shall be in accordance with the manufacturer's recommendations.

First-class workmanship and finish will be required on all portions of concrete curb and gutter work. Quality of workmanship and finish will be evaluated continuously and will be based solely upon the judgment of the Engineer. The Contractor shall be required to construct a minimum 20 linear foot section of curb and gutter which demonstrates quality which is acceptable by the Owner and Engineer. This "model" section will be referenced during construction for comparison to newly poured curb. If at any time it is found that quality is unacceptable, work shall be immediately stopped, and no additional curb and gutter shall be placed. Cement concrete curb and gutter which does not comply with the section details on the Plans, or in the Engineer's opinion does not demonstrate first-class workmanship and finish, shall be removed and replaced at the Contractor's expense.

Should the Contractor's equipment or methods be unable to produce curb and gutter meeting the requirements of the Details and Specifications, no further curb and gutter construction will be allowed until corrections have been made to said equipment or methods.

8-06 CEMENT CONCRETE DRIVEWAY ENTRANCES

8-06.3 Construction Requirements

This section is supplemented with the following:

The concrete driveway entrance/sidewalk shall be six (6) inches in thickness.

8-14 CEMENT CONCRETE SIDEWALKS

8-14.3(3) Placing And Finishing Concrete

This section is supplemented with the following:

All sidewalks not located in driveway entrance areas shall be four (4) inches in thickness. All sidewalks and concrete driveway entrances located behind a Depressed curb and gutter section or Rolled Curb section shall be six (6) inches in thickness.

Sidewalks shall be marked across the entire width every five (5) feet and with preformed asphalt impregnated joint fillers 3/8-inch thick every twenty (20) feet. Concrete sidewalk shall be cured in accordance with SECTION 5-05.3(13)A of the Standard Specifications. Application of the curing compound shall be in accordance with the manufacturer's recommendations. Failure to properly secure or seal the cement concrete sidewalk will require the Contractor to remove and replace the sidewalk section at his expense.

Sidewalk ramps shall be constructed at all intersections as shown on the Detail Sheet and at a width shown on the plans.

First-class workmanship and finish will be required on all portions of cement concrete sidewalk work. Quality of workmanship and finish will be evaluated continuously and will be based solely upon the judgment of the Engineer. If at any time it is found that quality is unacceptable, work shall be immediately stopped, and no additional sidewalk shall be placed. Cement concrete sidewalk which does not comply with the section details on the Plans, or in the Engineer's opinion does not demonstrate first-class workmanship and finish, shall be removed and replaced at the Contractor's expense. Should the Contractor's equipment or methods be unable to produce sidewalk meeting the requirements of the Details and Specifications, no further sidewalk construction will be allowed until corrections have been made to said equipment.

8-21 PERMANENT SIGNING

8-21.2 MATERIALS

This section is supplemented with the following:

Sign posts for permanent signing within an approved development shall be Unistrut Telespar 2"x2" 12-gage steel tubing. Socket sleeves for the Sign Post shall be Unistrut

Telespar 2-1/4"x 2-1/4"x30" 12-gage steel tubing.

Reflective background sheeting material shall be Type III for regulatory signs and Type 1 for all other signs.

8-21.3 CONSTRUCTION REQUIREMENTS

This section is supplemented with the following:

Socket sleeves for sign posts shall be set in 12" diameter x 18" deep base of class 3000 concrete at finish grade so that erected signs will be plumb. The Contractor shall correct any misaligned socket sleeves at his own expense.

8-30 CONTROLLED DENSITY FILL (NEW SECTION)

The following new section shall be added to the Standard Specifications:

8-30.1 GENERAL

Controlled Density Fill (CDF) may be required for street crossings by the Public Works Director. It shall be a mixture of Portland Cement, fly ash, aggregate, water, and admixtures proportioned to provide a non-segregating, self-consolidating, free-flowing material which will result in a hardened, dense, non-settling fill.

8-30.2 MATERIALS

Materials shall meet the requirements of the following Sections of the Standard Specifications:

Portland Cement	9-01 Type II
Fly Ash	Class F or C
Aggregates	9-03.1
Water	9-25
Admixtures	9-23.6

8-30.3 CONSTRUCTION REQUIREMENTS

8-30.3(1) Construction Materials

The CDF shall be a mixture of Portland Cement, fly ash, aggregate, water, and admixtures which has been batched and mixed in accordance with Section 6-02.3 of the Standard Specifications.

The following table provides a guideline for proportioning the Controlled Density Fill for this project. The final mix provided by the Contractor shall result in a material which is excavatable by machine with a maximum unconfined compressive strength of 300 psi.

Water	50 gals per cubic yard
Cement	50 lbs per cubic yard
Fly Ash	250 lbs per cubic yard
Aggregate	3,200 lbs per cubic yard

The above table provides a guideline for the CDF mixture. The weights shown are only an estimate of the amount to be used per cubic yard of CDF. Actual amounts may vary from those shown as approved by the Engineer or approved mix data from similar projects which provided proper strength, workability, consistency, and density.

8-30.3(7) Placing Controlled Density Fill

The floatable CDF shall be placed in the trench area where directed by the Engineer or Inspector for smaller jobs and brought up uniformly to the elevation directed. In the cases where existing concrete slabs have been undermined by excavation, the Contractor shall ensure that the CDF is flowed completely under the slab.

Mixing and placing may be started if weather conditions are favorable, when the temperature is at least 34° F and rising. At the time of placement, CDF must have a temperature of at least 40° F. Mixing and placing shall stop when the temperature is 38° F and falling. Each filling stage shall be as continuous an operation as practicable. CDF shall not be placed on frozen ground.

The trench section to be filled with CDF shall be contained at either end of trench section by bulkhead or earth fill.

APPENDIX A

TRANSFER OF OWNERSHIP OF PUBLIC WORKS IMPROVEMENTS

(Individual)

_____, Developer/Property Owner(s), do(es) hereby transfer(s), deliver(s) and relinquish(es) to the City of Zillah, Washington, all right, title and interest in, and ownership of, the following described Public Works Improvement located at:_____

_____

☐ Water ☐ Sewer ☐ Stormwater ☐ Streets

_____

_____

_____

_____

The undersigned owner(s) agree (s) and understand(s) that this transfer of ownership of the above described Public Improvement to the City of Zillah is subject to the conditions of the 2nd paragraph of **Section 1-05.12 Final Acceptance** of the latest edition of the Standard Specifications for Road, Bridge, and Municipal Construction, Washington State Department of Transportation modified as follows:

> "Final acceptance shall not constitute acceptance of any unauthorized or defective work or material. The City shall not be barred from requiring the Contractor to remove, replace, repair, or dispose of any unauthorized or defective work or material or from recovering damages for any such work or material for a period of two (2) years."

This Transfer of Ownership shall be effective only upon the City's receipt of the Record Drawings and final approval and acceptance of the constructed improvements.

_____

PROPERTY OWNER/DEVELOPER DATE

ACCEPTED BY THE CITY OF ZILLAH

_____

AUTHORIZED OFFICIAL DATE

TRANSFER OF OWNERSHIP

STATE OF WASHINGTON)
) ss.
Yakima County)

I certify that I know of and have satisfactory evidence that _____ and _____ (is/are) the person(s) who personally appeared before me and that said person(s) acknowledged that (he/she/they) signed this instrument, and acknowledged it to be (his/her/their) free and voluntary act and for the uses and purposes mentioned in the instrument.

Dated: _____

Given under my hand and official seal the day and year last written.

_____

Notary Public in and for the State of Washington residing at _____

My Commission expires _____

TRANSFER OF OWNERSHIP OF PUBLIC WORKS IMPROVEMENT

(Corporate)

_____, Developer/Property Owner(s), do(es) hereby transfer(s), deliver(s) and relinquish(es) to the City of Zillah, Washington, all right, title and interest in, and ownership of, the following described Public Works Improvement located at:_____

_____

☐ Water ☐ Sewer ☐ Stormwater ☐ Streets

_____

_____

_____

_____

The undersigned owner(s) agree (s) and understand(s) that this transfer of ownership of the above described Public Improvement to the City of Zillah is subject to the conditions of the 2nd paragraph of **Section 1-05.12 Final Acceptance** of the latest edition of the Standard Specifications for Road, Bridge, and Municipal Construction, Washington State Department of Transportation modified as follows:

> "Final acceptance shall not constitute acceptance of any unauthorized or defective work or material. The City shall not be barred from requiring the Contractor to remove, replace, repair, or dispose of any unauthorized or defective work or material or from recovering damages for any such work or material for a period of two (2) years."

This Transfer of Ownership shall be effective only upon the City's receipt of the Record Drawings and final approval and acceptance of the constructed improvements.

_____

PROPERTY OWNER/DEVELOPER DATE

ACCEPTED BY THE CITY OF ZILLAH

_____

AUTHORIZED OFFICIAL DATE

TRANSFER OF OWNERSHIP

STATE OF WASHINGTON)
) **ss.**
Yakima County)

I certify that I know or have satisfactory evidence that _____ Is the person who appeared before me, and said person acknowledged that he signed this instrument, on oath stated that he was authorized to execute the instrument, and acknowledged it as the _____ of _____a _____to be the free voluntary act of such party for the uses and purposes mentioned in the instrument.

Dated: _____

Given under my hand and official seal the day and year last written.

_____

Notary Public in and for the State of Washington residing at _____

My Commission expires _____

APPENDIX B

CITY OF ZILLAH STANDARD DETAILS

E-1	Conduit Trench
E-2	Junction Box
E-3	Residential Street Light
SD-1	Catch Basin Type 1/1L
SD-2	Catch Basin Type 2
SS-1	Sewer Manhole Type 1
SS-2	Sewer Cleanout
SS-3	Sewer Drop Connection
SS-4	Sewer Manhole Adjustment
SS-5	Sewer/Storm Drain Pipe Trench Section
SS-6	Manhole Safety Step
SS-7	Side Sewer Connection
ST-1	Roadway Section - Arterial
ST-2	Roadway Section - Collector
ST-3	Roadway Section - Local Access - No Parking
ST-4	Roadway Section - Local Access - Parking Allowed
ST-5	Concrete Curb & Gutter
ST-6	Concrete Sidewalk Sections
ST-7	Sidewalk Ramp
ST-8	Sidewalk Jointing
ST-9	Residential Driveway Entrance
ST-10	Trench Surfacing Repair
ST-11	Monument
ST-12	Asphalt Sidewalk Ramp
ST-13	Cul-de-Sac Layout
W-1	Concrete Thrust Blocking
W-2	Fire Hydrant Assembly
W-3	Water Service
W-4	Water Meter Box
W-5	Water Valve Box
W-6	Air Release Valve
W-7	Blow Off Assembly
W-8	Hydrant Guard Posts

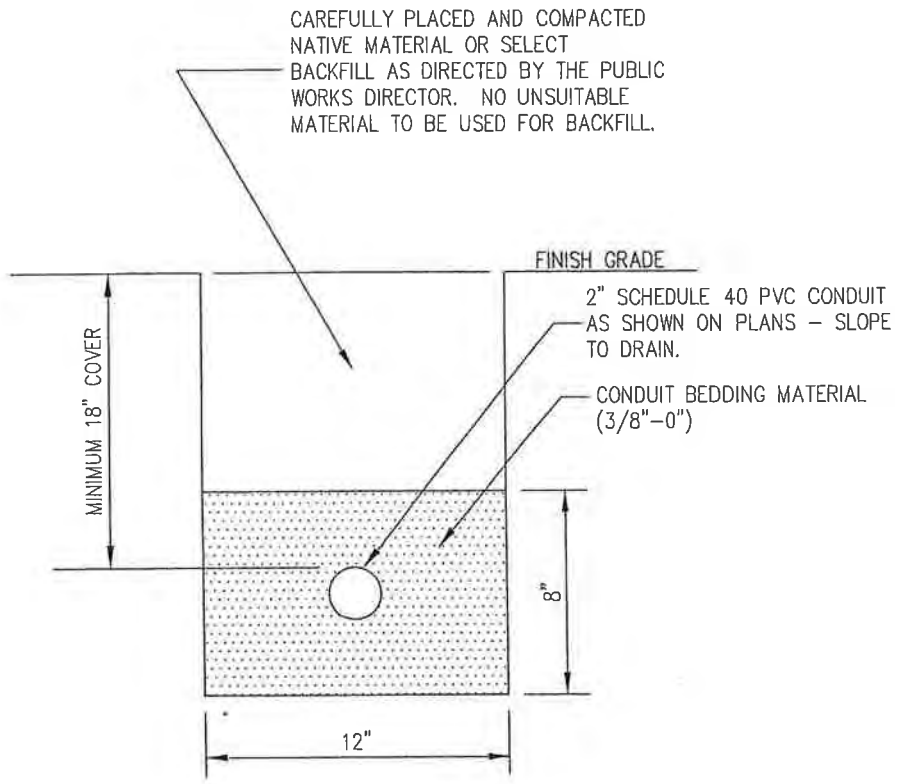

CONDUIT TRENCH SECTION

NOT TO SCALE

NOTE:
ONLY THE LATEST DETAIL, AS APPROVED BY THE DIRECTOR OF PUBLIC WORKS, SHALL BE USED.

Revision	Date	Description	App.
ORIG.	10/06		

CITY OF ZILLAH–STANDARD DETAIL	CONDUIT TRENCH	E–1

NOTE:
GROUND ROD FOR PVC CONDUIT
OR NO. 8 AWG BONDING JUMPER
FOR METAL CONDUIT (RIGID)
REQUIRED AT EACH PULLBOX
SEE PLANS FOR CONDUIT TYPE.

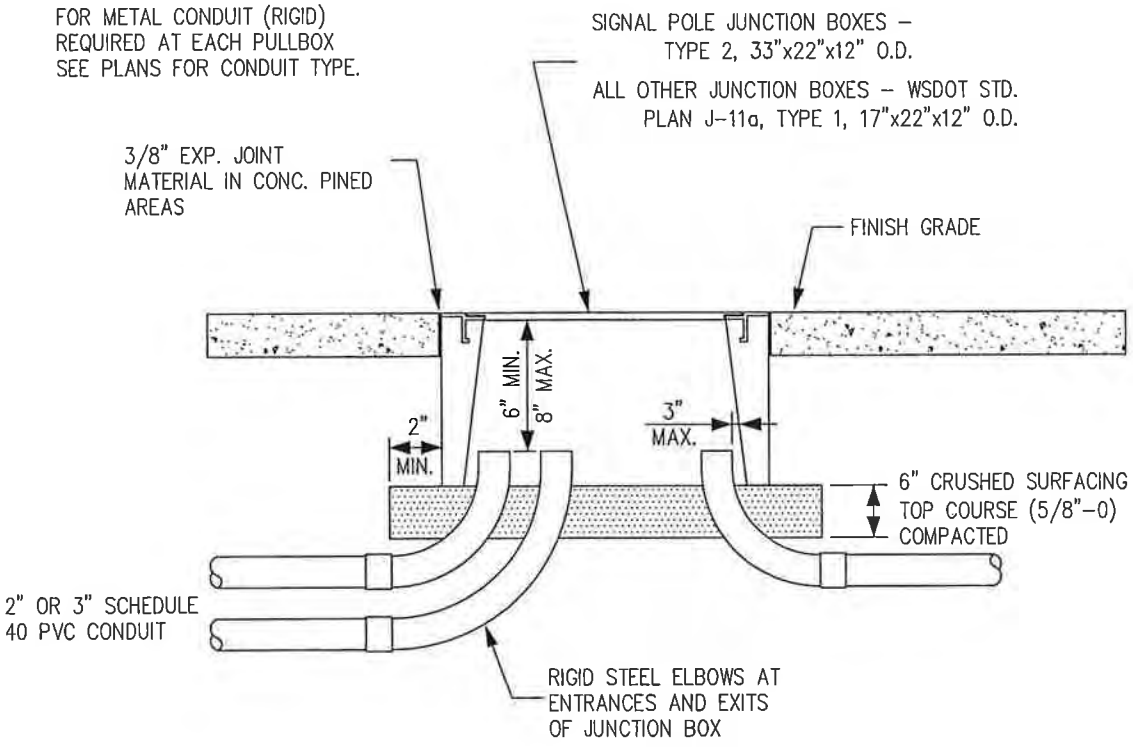

CONDUIT ENTRANCE AT JUNCTION BOX

NOT TO SCALE

NOTE:
ONLY THE LATEST DETAIL, AS APPROVED BY
THE DIRECTOR OF PUBLIC WORKS, SHALL BE USED.

ORIG.	10/06		
Revision	Date	Description	Appr

CITY OF ZILLAH–STANDARD DETAIL	JUNCTION BOX	E–2

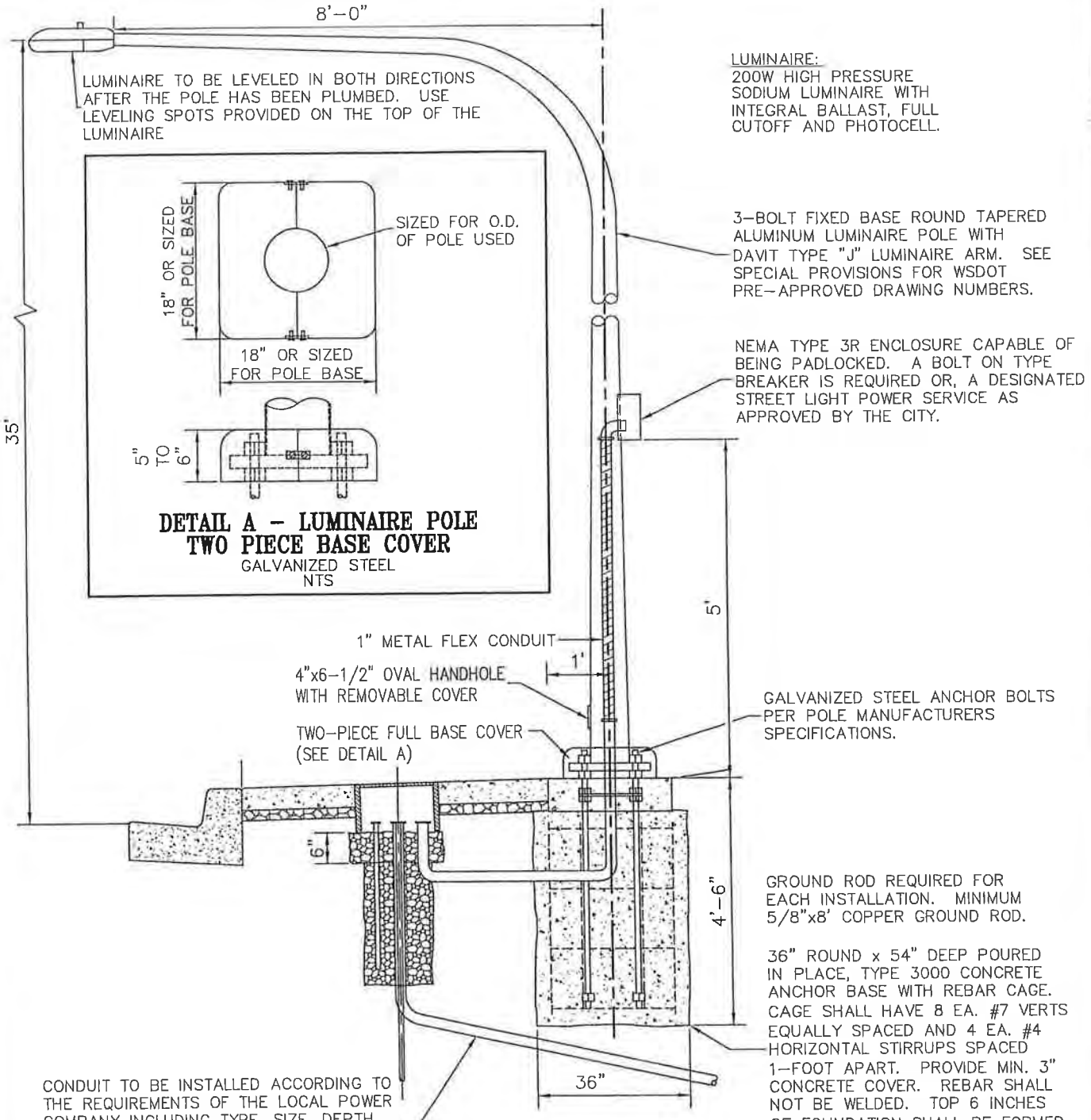

RESIDENTIAL STREET LIGHT DETAIL

NOT TO SCALE

NOTE:
ONLY THE LATEST DETAIL, AS APPROVED BY THE DIRECTOR OF PUBLIC WORKS, SHALL BE USED.

Revision	Date	Description	App.
ORIG.	10/06		

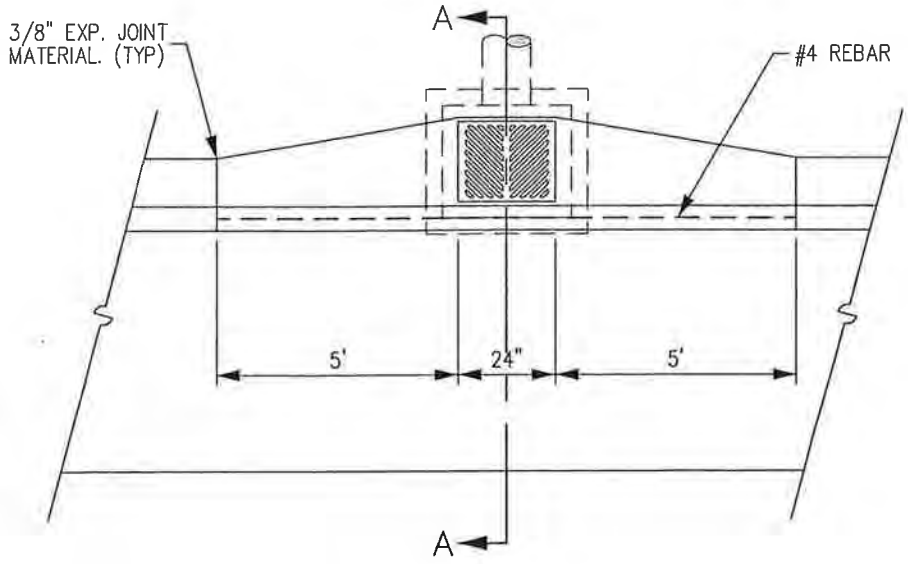

PLAN

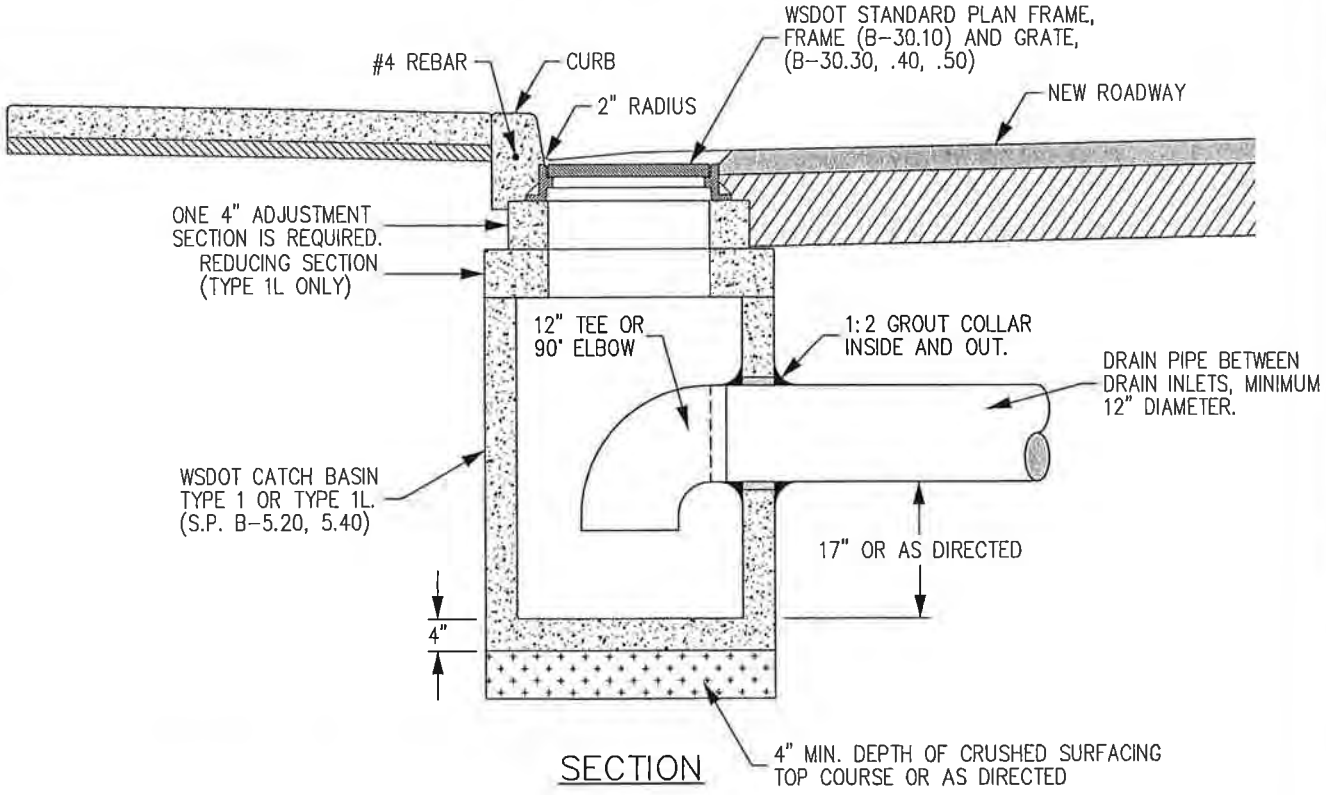

SECTION

CATCH BASIN DETAIL

NOT TO SCALE

NOTES:

- USE VANED GRATES WHEN STREET GRADE EXCEEDS 4%.
- FRAMES AND GRATES SHALL BE MANUFACTURED IN THE UNITED STATES.
- ONLY THE LATEST DETAIL, AS APPROVED BY THE DIRECTOR OF PUBLIC WORKS, SHALL BE USED.

ORIG.	10/06		
Revision	Date	Description	Appr

CITY OF ZILLAH–STANDARD DETAIL	CATCH BASIN	SD–1

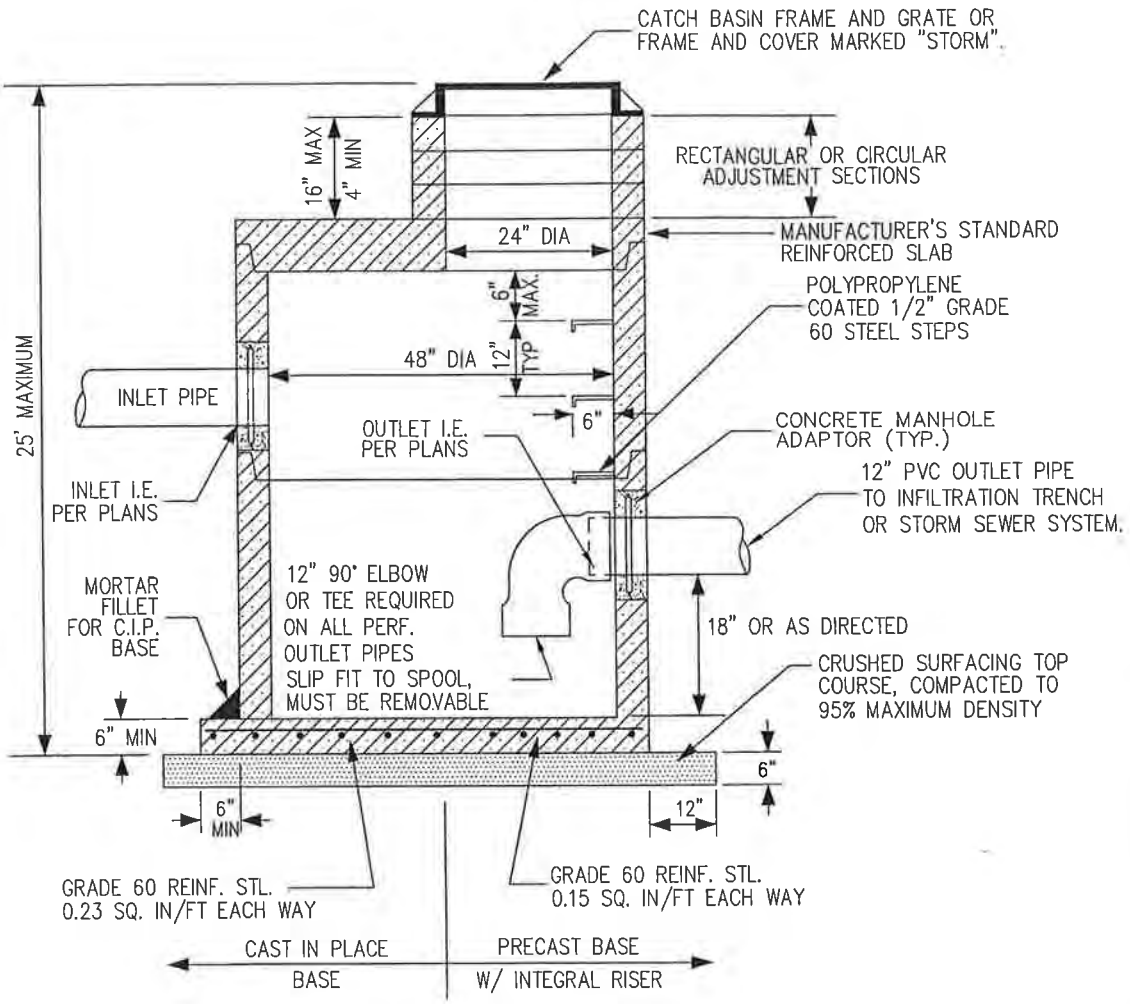

48" DIA. TYPE 2 CATCH BASIN (S.P. B-10.20)

NOT TO SCALE

NOTES:

- FRAMES AND GRATES SHALL BE MANUFACTURED IN THE UNITED STATES.
- ONLY THE LATEST DETAIL, AS APPROVED BY THE DIRECTOR OF PUBLIC WORKS, SHALL BE USED.

Revision	Date	Description	Appr
ORIG.	11/06		

CITY OF ZILLAH–STANDARD DETAIL	TYPE 2 CATCH BASIN	SD–2

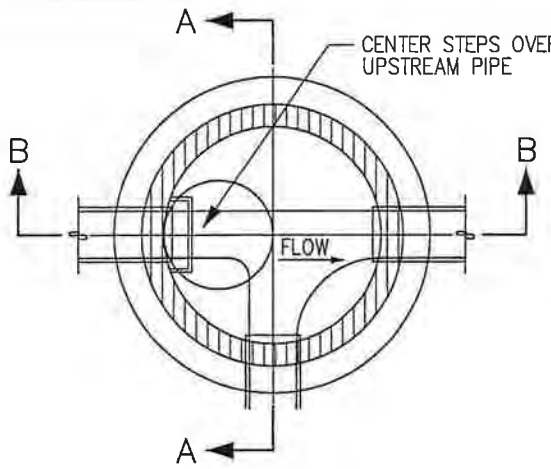

PLAN VIEW

FOR MANHOLES LESS THAN 8' HIGH, USE SHALLOW MANHOLE WITH THE MANUFACTURER'S STANDARD REINFORCED SLAB LID.

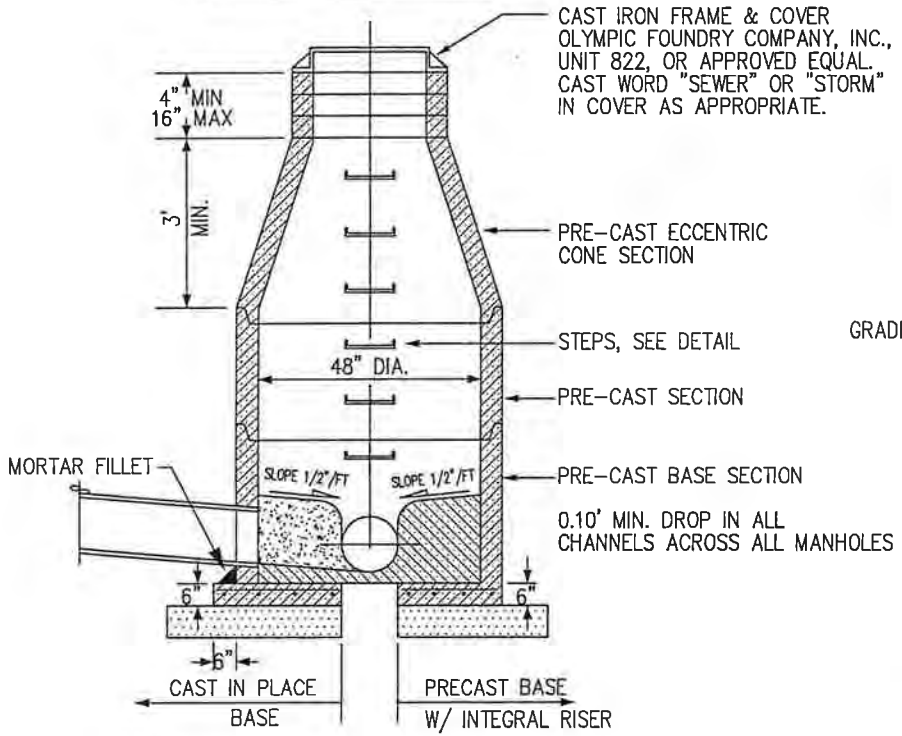

SECTION A-A

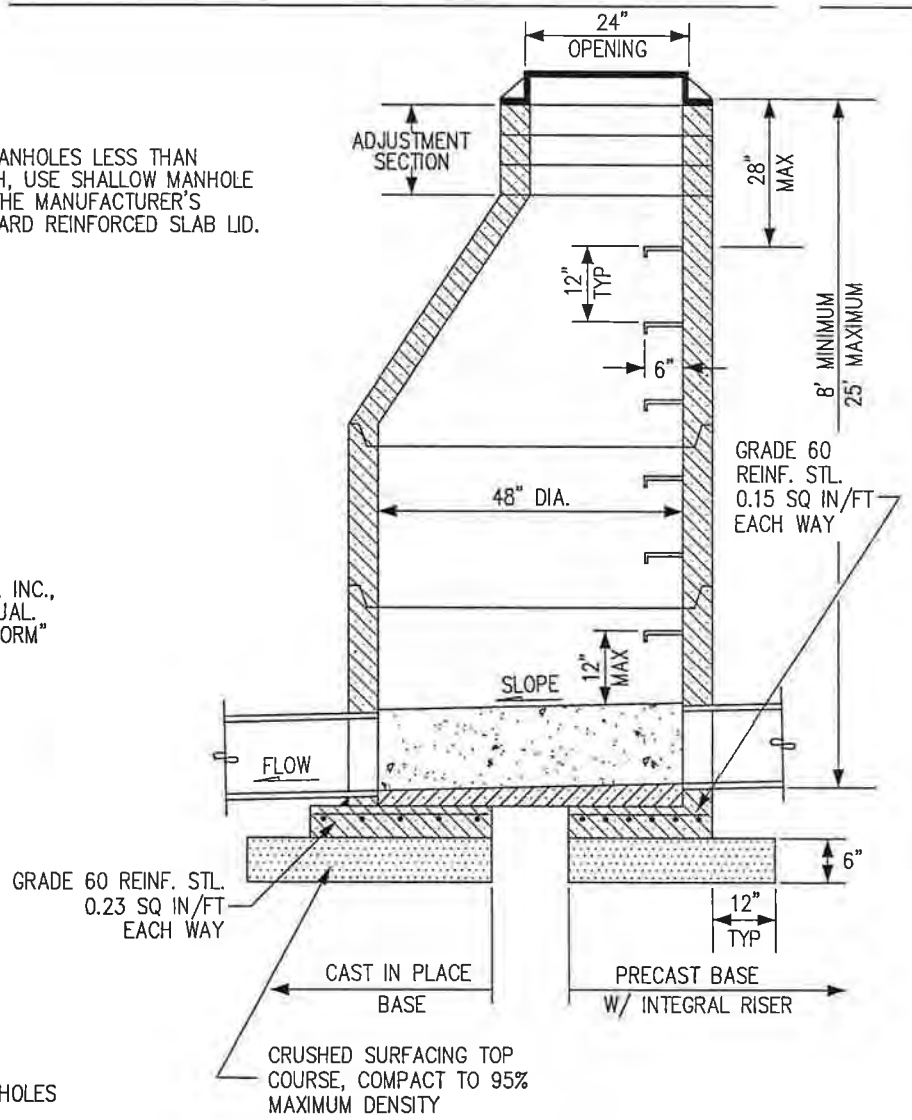

SECTION B-B

NOTE:
ONLY THE LATEST DETAIL, AS APPROVED BY THE DIRECTOR OF PUBLIC WORKS, SHALL BE USED.

ORIG.	10/06		
Revision	Date	Description	Appr

CITY OF ZILLAH-STANDARD DETAIL	MANHOLE (TYPE 1)	SS-1

NOTES:

1. CAST IRON FRAME & COVER SHALL BE OLYMPIA FOUNDRY COMPANY INC., UNIT 247 OR APPROVED EQUAL.

2. IN UNPAVED AREAS, SET FRAME & COVER FLUSH WITH FINISHED GRADE. EXTEND 12" THICK, 2' DIAMETER, CEMENT CONCRETE RING FLUSH WITH FRAME AND SLOPE OUTWARD AT 1/4"/FT.

3. CLEANOUT PIPE SHALL BE 8" DIAM. PVC SEWER PIPE IN ACCORDANCE W/ THE STANDARD SPECS.

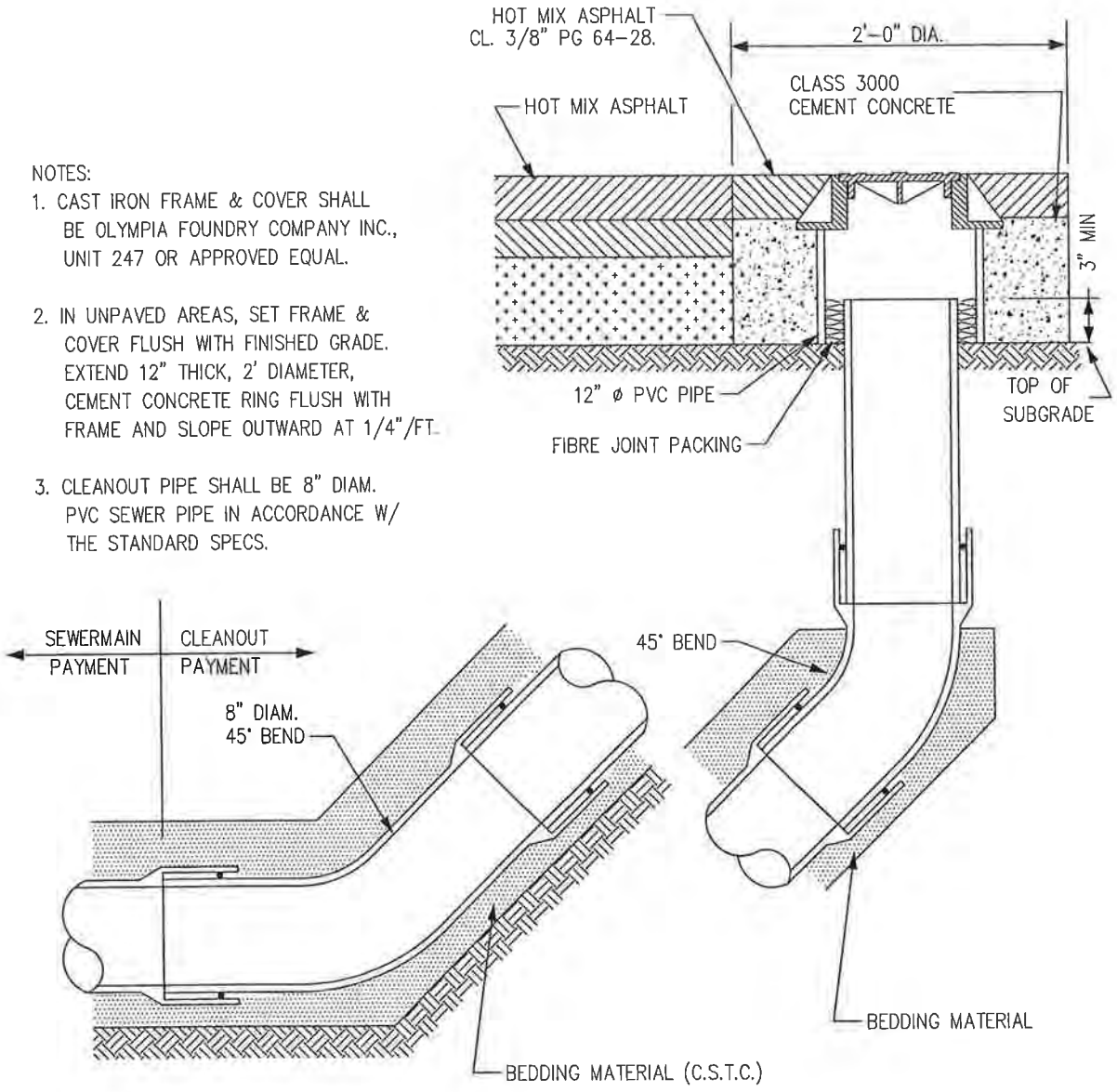

SANITARY SEWER CLEANOUT

NOT TO SCALE

NOTES:

- ONLY THE LATEST DETAIL, AS APPROVED BY THE DIRECTOR OF PUBLIC WORKS, SHALL BE USED.

Revision	Date	Description	App.
ORIG.	11/06		

CITY OF ZILLAH–STANDARD DETAIL	SANITARY SEWER CLEANOUT	SS–2

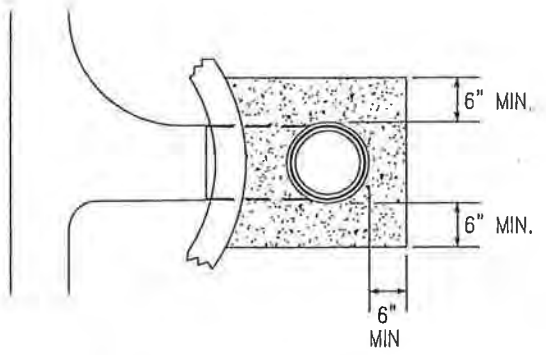

SECTION A–A

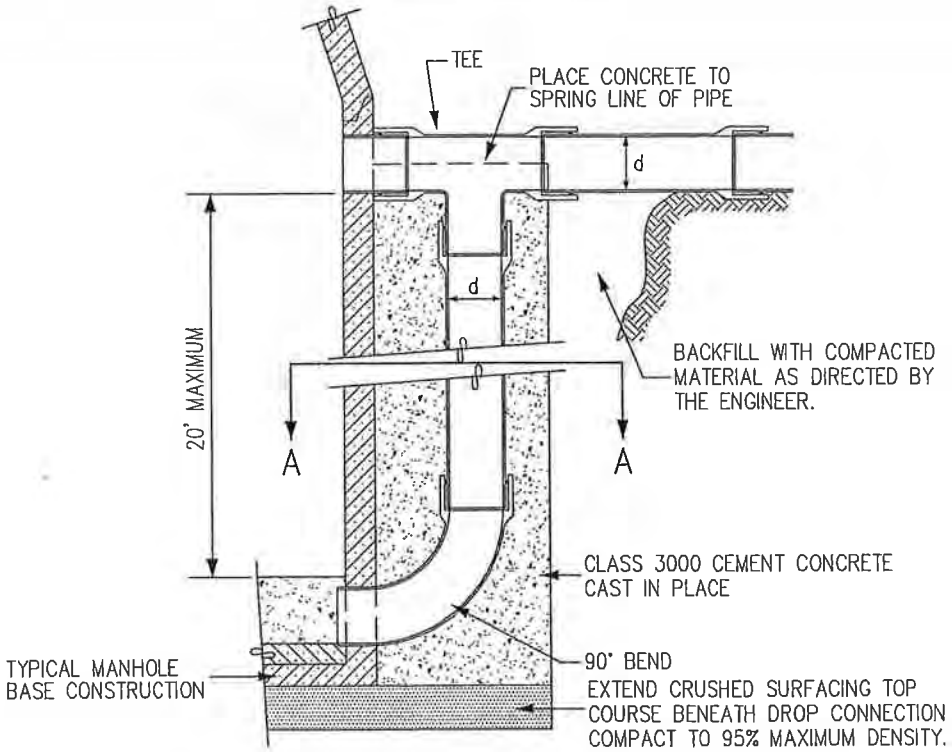

PROFILE VIEW

DROP CONNECTION

NOT TO SCALE

NOTE:
ONLY THE LATEST DETAIL, AS APPROVED BY
THE DIRECTOR OF PUBLIC WORKS, SHALL BE USED.

ORIG.	10/06		
Revision	Date	Description	Appr

CITY OF ZILLAH–STANDARD DETAIL	DROP CONNECTION	SS–3

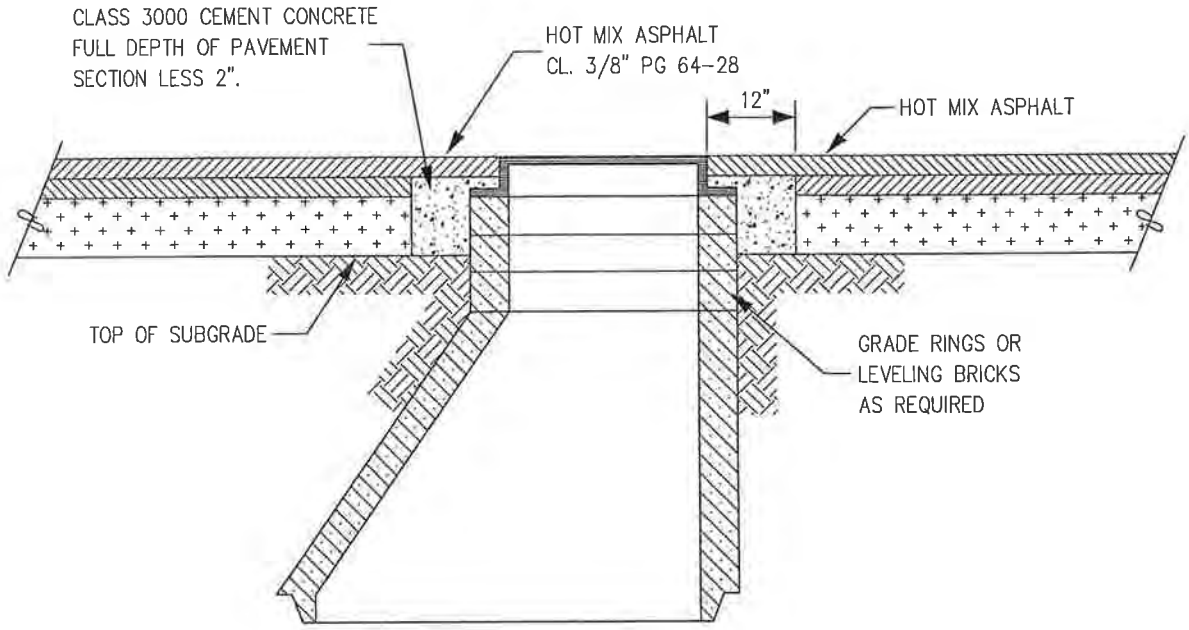

NOTES:

1. MANHOLES SHALL BE ADJUSTED TO FINISHED GRADE AFTER PLACEMENT OF THE FINAL LIFT OF ASPHALT PAVEMENT.

2. GRADE RINGS AND/OR LEVELING BRICKS SHALL BE GROUTED IN PLACE AND BE WATER TIGHT.

3. IN UNPAVED AREAS, PROVIDE 12" THICK, 5' DIA. CEMENT CONCRETE RING AROUND TOP OF MANHOLE. SET MANHOLE FRAME FLUSH W/ FINISHED GRADE AND SLOPE CONCRETE OUTWARD AT 1/4"/FT.

MANHOLE ADJUSTMENT DETAIL

NOT TO SCALE

NOTE:
ONLY THE LATEST DETAIL, AS APPROVED BY THE DIRECTOR OF PUBLIC WORKS, SHALL BE USED.

ORIG.	10/06		
Revision	Date	Description	Appr

CITY OF ZILLAH–STANDARD DETAIL	MANHOLE ADJUSTMENT DETAIL	SS–4

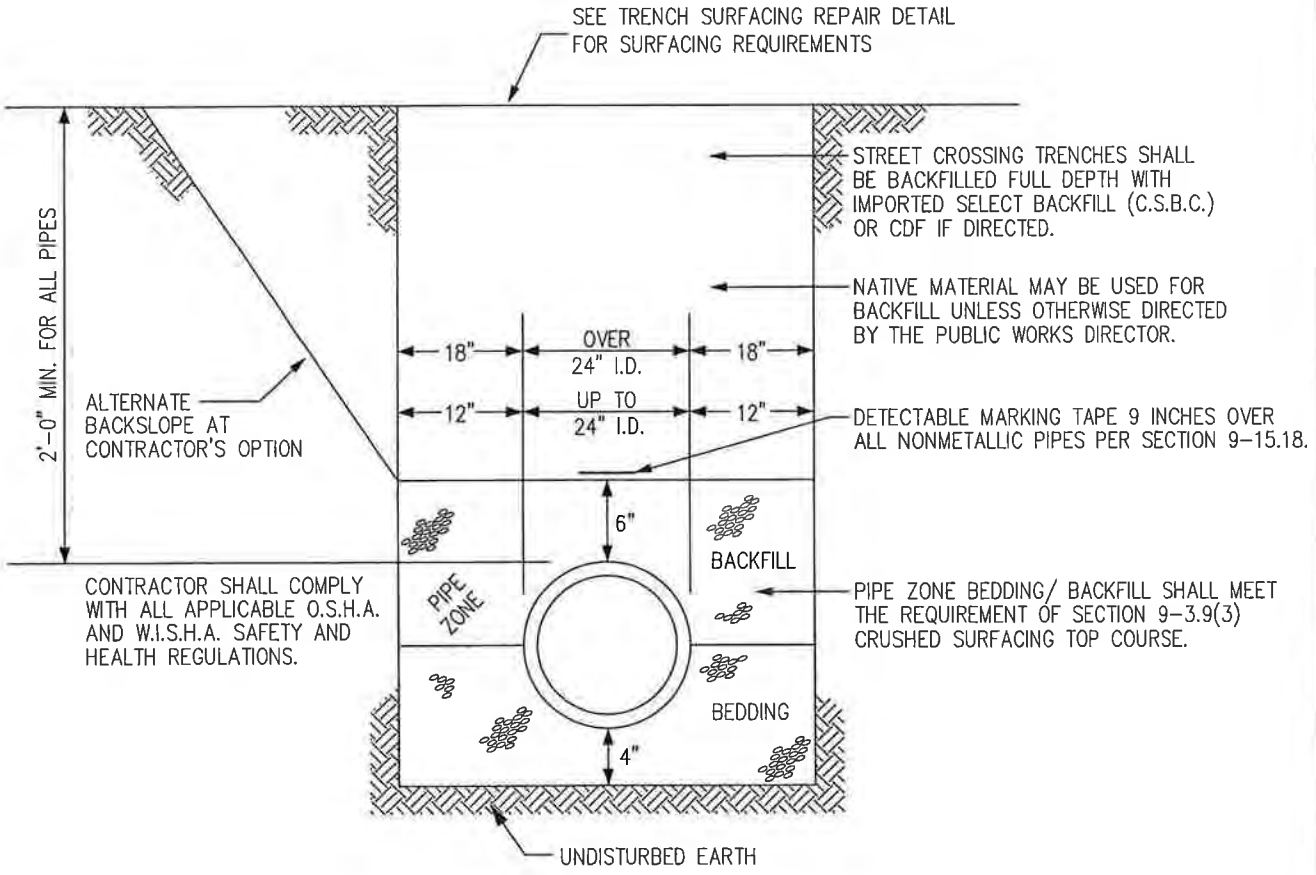

SANITARY/ STORM SEWER TRENCH

NOT TO SCALE

NOTES:

- FOR 4" AND 6" SIDE SEWERS, INSTALL IMPORTED PIPE BEDDING A MINIMUM OF 3" THICK ON ALL SIDES OF PIPE.
- MECHANICAL TAMPING AND COMPACTION REQUIRED AS DIRECTED BY THE CITY. WATER SETTLING MAY ONLY BE USED OUTSIDE THE ROADWAY PRISM WHEN APPROVED BY THE CITY.
- ONLY THE LATEST DETAIL, AS APPROVED BY THE DIRECTOR OF PUBLIC WORKS, SHALL BE USED.

ORIG.	11/06		
Revision	Date	Description	Appr

CITY OF ZILLAH–STANDARD DETAIL	SEWER PIPE TRENCH	SS–5

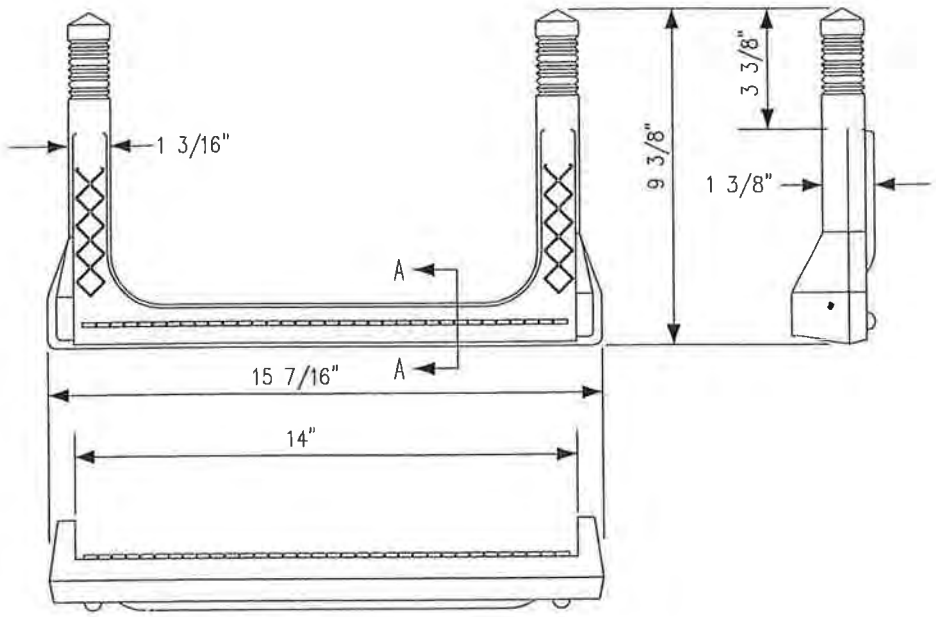

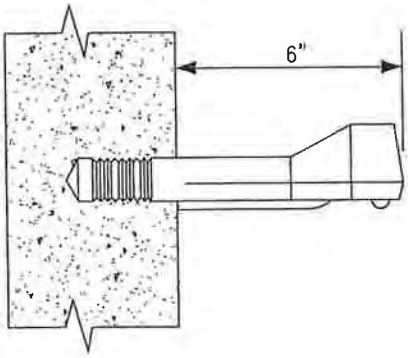

COPOLYMER POLYPROPYLENE
PLASTIC 1/2" GRADE 60
STEEL REINFORCEMENT

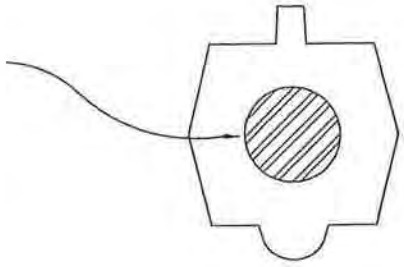

SECTION A-A

NOTE:

MANHOLE STEPS SHALL BE COPOLYMER POLYPROPYLENE PLASTIC COATED 1/2" GRADE 60 STEEL REINFORCEMENT, MODEL PS2-PF, AS MANUFACTURED BY M.A. INDUSTRIES INC., OR APPROVED EQUAL

MANHOLE SAFETY STEP

NOT TO SCALE

NOTE:
ONLY THE LATEST DETAIL, AS APPROVED BY THE DIRECTOR OF PUBLIC WORKS, SHALL BE USED.

Revision	Date	Description	App.
ORIG.	10/06		

CITY OF ZILLAH–STANDARD DETAIL	MANHOLE SAFETY STEP	SS–6

CITY OF ZILLAH—STANDARD DETAIL

SIDE SEWER CONNECTION

SS-7

NOTES:
- ONLY THE LATEST DETAIL, AS APPROVED BY THE DIRECTOR OF PUBLIC WORKS, SHALL BE USED.

Revision	Date	Description	Appr
ORIG.	10/06		

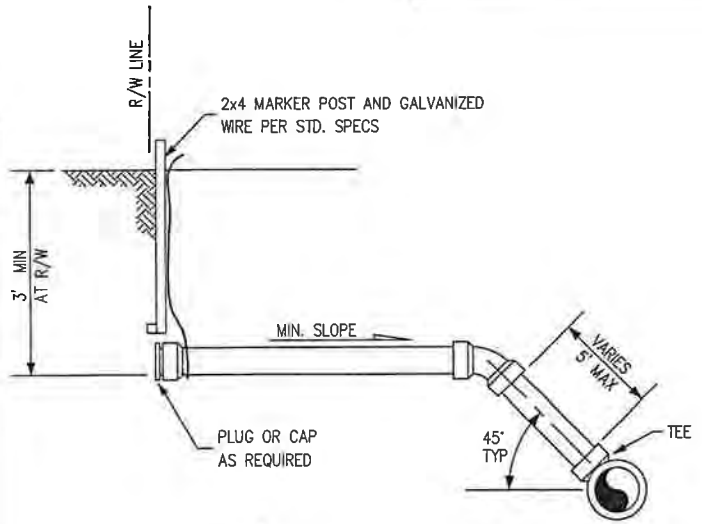

SECTION A–A

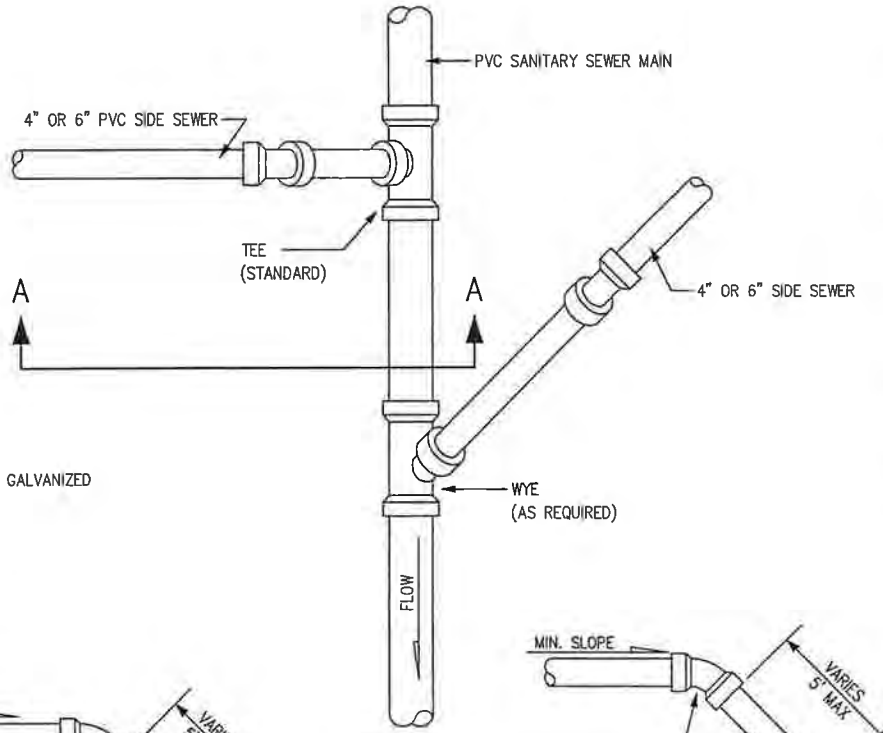

PLAN

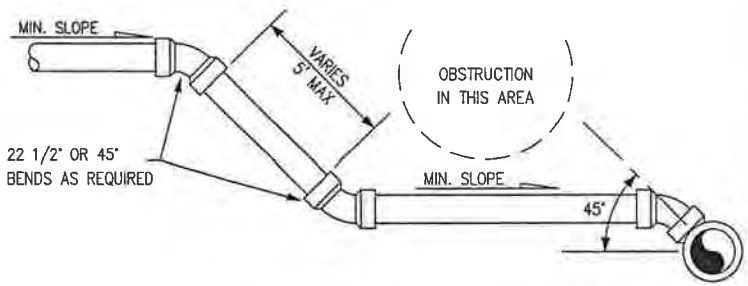

CONNECTION AT OBSTRUCTION

NOTES:
1. SIDE SEWERS SHALL BE INSTALLED PER SEC. 7-18 OF THE STANDARD SPECIFICATION.
2. SERVICE CONNECTIONS 8" OR LARGER MUST BE MADE AT MANHOLE.
3. IF 5' MAXIMUM SLOPED DISTANCE IS INSUFFICIENT FOR SIDE SEWER CONNECTION, INSTALL SIDE SEWER RISER PER DETAIL.
4. ROTATE SANITARY SEWER MAIN TEE OR WYE 45° UPWARD.
5. TEES OR WYES SHALL BE INSTALLED IN NEW SANITARY SEWER MAINS. WHEN INSTALLING SIDE SEWERS IN EXISTING MAINS, CONNECTION SHALL BE MADE BY MACHINE MADE TAP AND APPROVED SADDLE.
6. WHERE DEPTH IS INSUFFICIENT TO ALLOW CONNECTION AS SHOWN, CONNECT SERVICE AS DIRECTED BY THE PUBLIC WORKS DIRECTOR.
7. TERMINATE SIDE SEWER AT R/W LINE UNLESS OTHERWISE DIRECTED BY THE PUBLIC WORKS DIRECTOR OR SHOWN OTHERWISE ON PLANS.
8. ALL SIDE SEWER MATERIALS SHALL BE PVC SEWER PIPE CONFORMING TO THE REQUIREMENTS OF SECTION 9-05.12 OF THE STD. SPECS.

SIDE SEWER CONNECTIONS

NOT TO SCALE

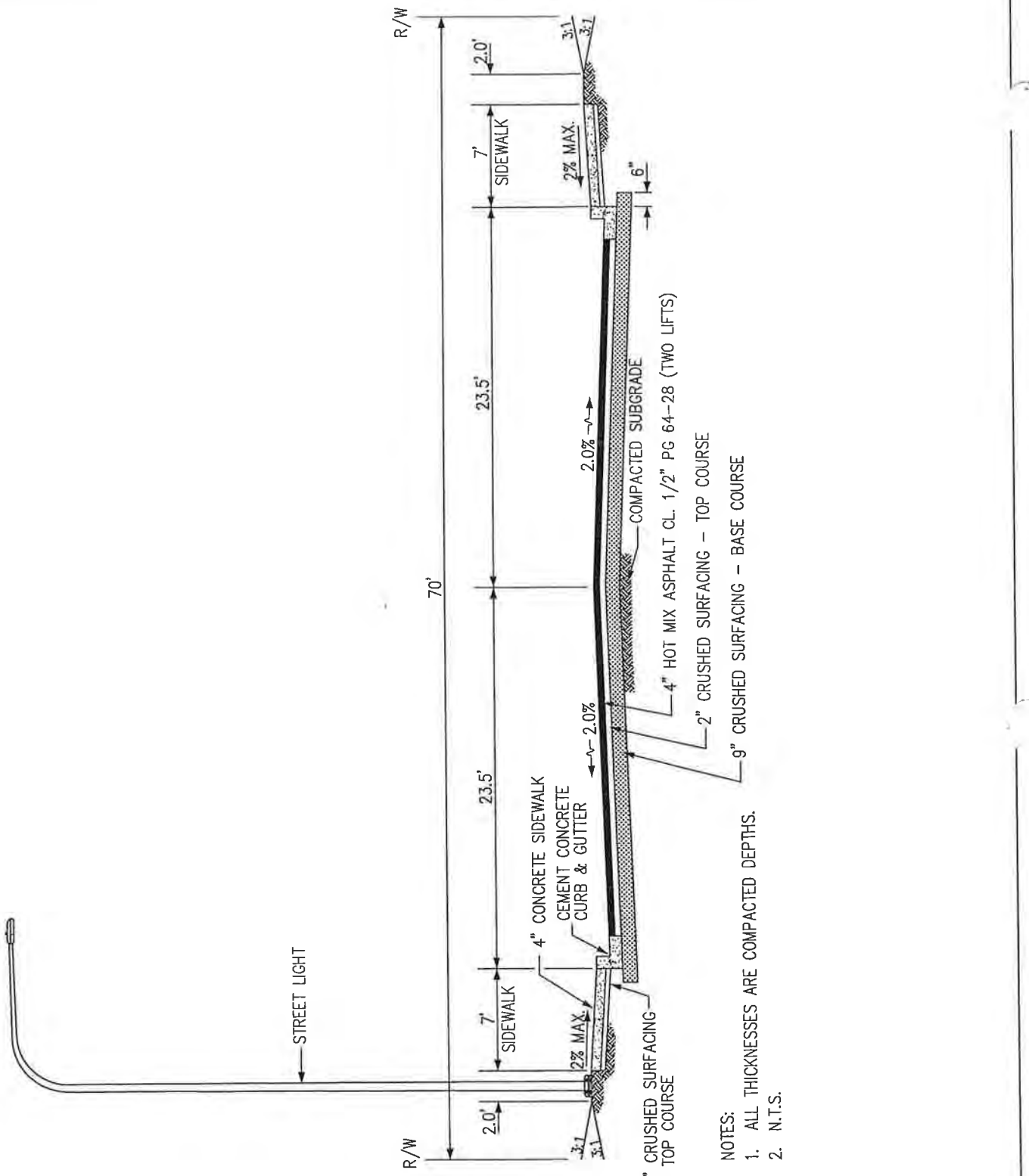

NOTES:
1. ALL THICKNESSES ARE COMPACTED DEPTHS.
2. N.T.S.

NOTE:
ONLY THE LATEST DETAIL, AS APPROVED BY THE DIRECTOR OF PUBLIC WORKS, SHALL BE USED.

Revision	Date	Description	Appr
ORIG.	11/06		

CITY OF ZILLAH—STANDARD DETAIL	ROADWAY SECTION—MAJOR COLLECTOR	ST-1

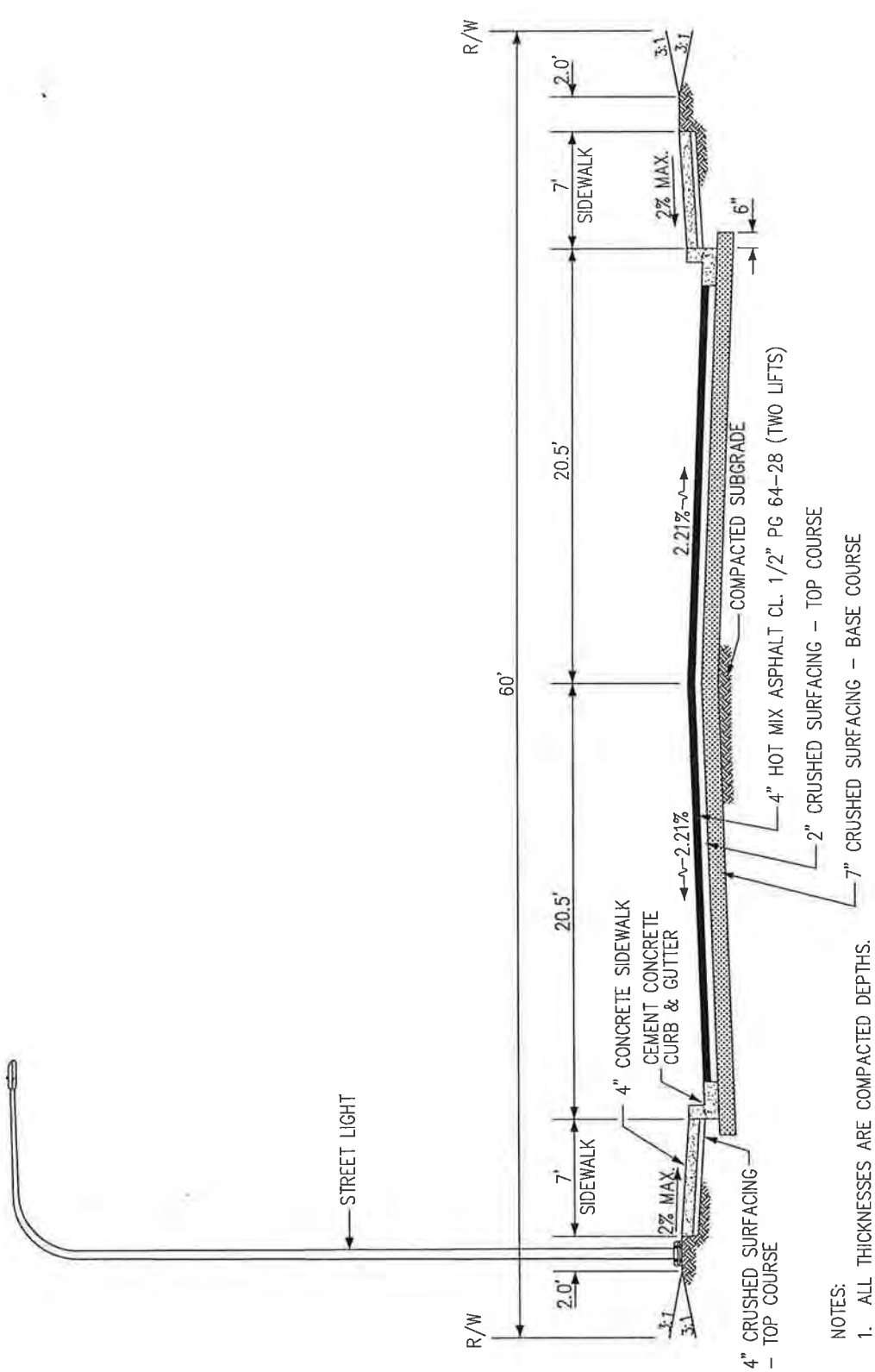

NOTES:
1. ALL THICKNESSES ARE COMPACTED DEPTHS.
2. N.T.S.

NOTE:
ONLY THE LATEST DETAIL, AS APPROVED BY
THE DIRECTOR OF PUBLIC WORKS, SHALL BE USED.

Revision	Date	Description	Appr
ORIG.	11/06		

CITY OF ZILLAH—STANDARD DETAIL	ROADWAY SECTION—MINOR COLLECTOR	ST-2

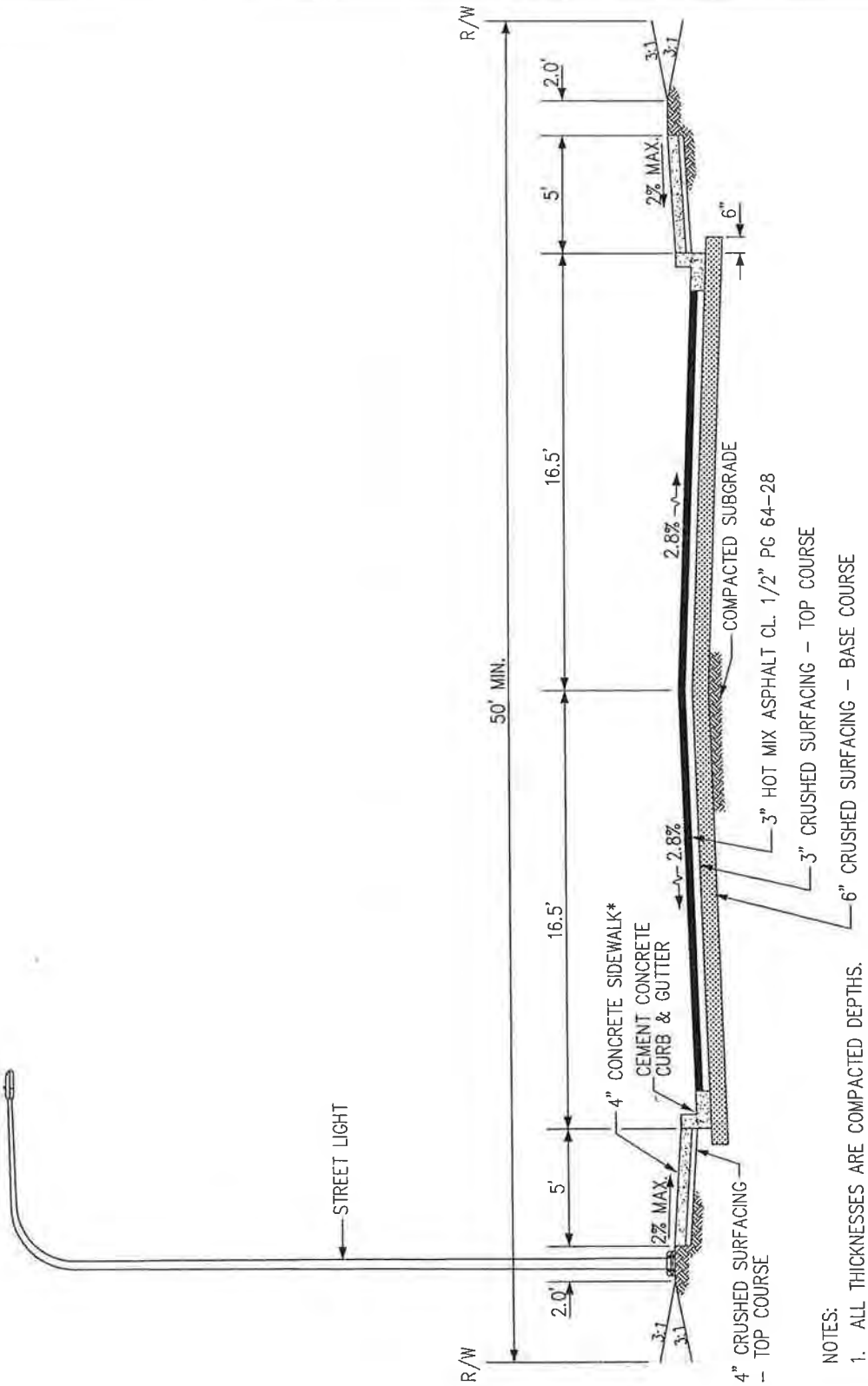

NOTES:
1. ALL THICKNESSES ARE COMPACTED DEPTHS.
2. * IF MOUNTABLE CURB AND GUTTER SECTION IS APPROVED, SIDEWALK SHALL BE 6" DEPTH.
3. N.T.S.

NOTE:
ONLY THE LATEST DETAIL, AS APPROVED BY THE DIRECTOR OF PUBLIC WORKS, SHALL BE USED.

Revision	Date	Description	Appr
ORIG.	11/06		

CITY OF ZILLAH–STANDARD DETAIL	ROADWAY SECTION–LOCAL ACCESS (RESIDENTIAL) NO PARKING ALLOWED	ST–3

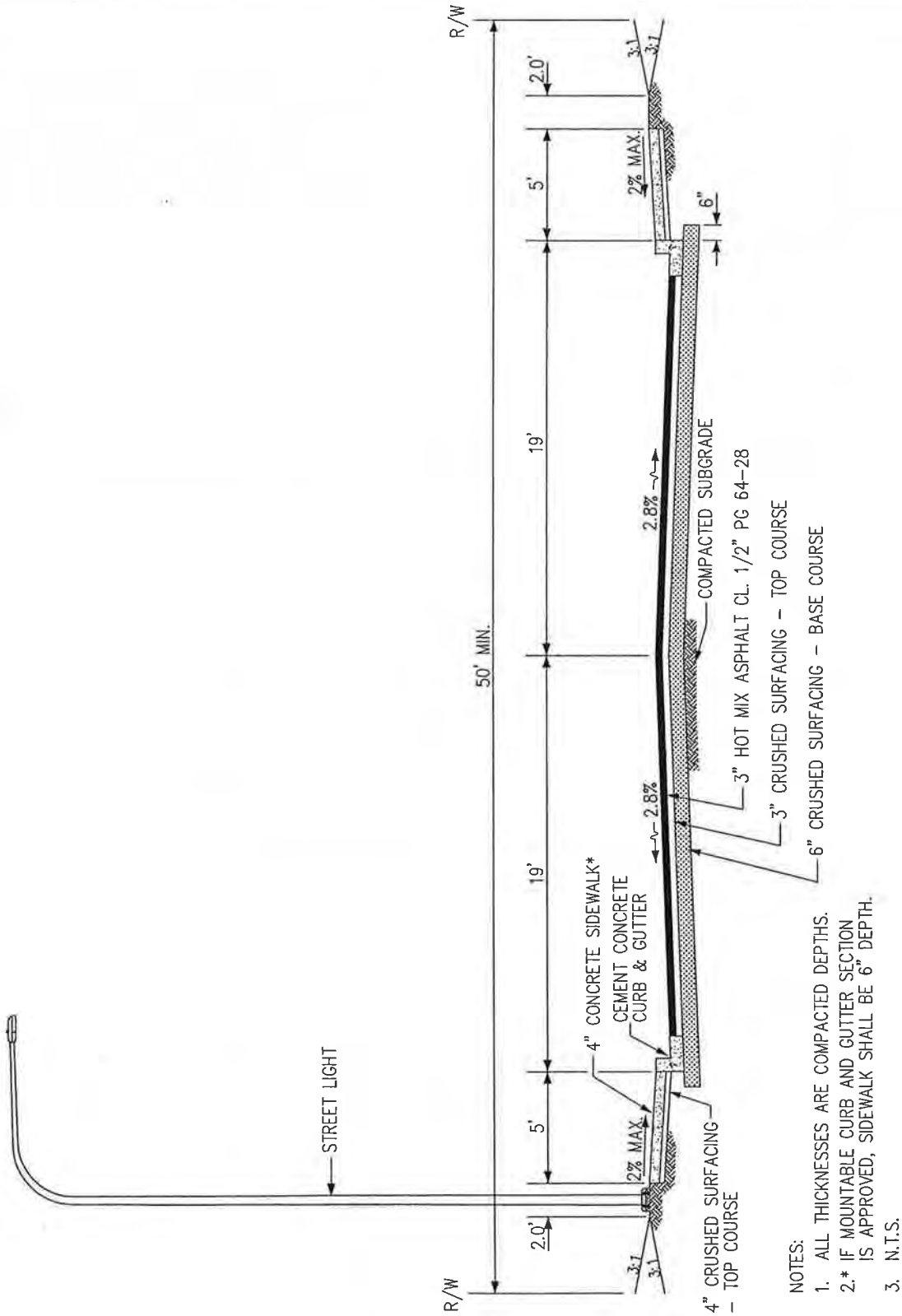

NOTES:
1. ALL THICKNESSES ARE COMPACTED DEPTHS.
2. * IF MOUNTABLE CURB AND GUTTER SECTION IS APPROVED, SIDEWALK SHALL BE 6" DEPTH.
3. N.T.S.

NOTE:
ONLY THE LATEST DETAIL, AS APPROVED BY THE DIRECTOR OF PUBLIC WORKS, SHALL BE USED.

Revision	Date	Description	Appr
ORIG.	11/06		

CITY OF ZILLAH–STANDARD DETAIL

ROADWAY SECTION–LOCAL ACCESS (RESIDENTIAL) ON STREET PARKING ALLOWED

ST–4

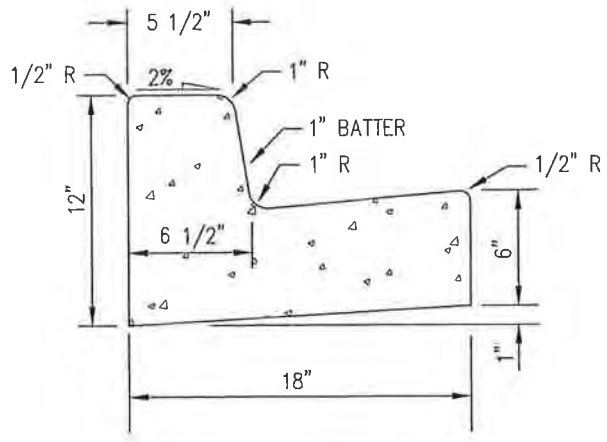

FULL HEIGHT – BARRIER

NOTES:

1. AS DIRECTED BY THE PUBLIC WORKS DIRECTOR. MAY VARY DEPENDING UPON GRADE OF SIDEWALK AND DRIVEWAY BEYOND CURB. BACK OF CURB WILL BE 6 1/2" HIGH AT SIDEWALK RAMPS.
2. 3/8" THICK MASTIC EXPANSION JOINT TO BE PLACED AT ALL POINTS OF TANGENCY.
3. FOR STATIONARY FORM CONSTRUCTION STANDARD PLATES AND HALF PLATES TO BE PLACED AT 10'–0" INTERVALS.
4. FOR SLIP–FORM CONSTRUCTION, PROVIDE FULL DEPTH JOINTS AT 10'–0" INTERVALS.
5. BACKFILL BEHIND CURB SHALL EXTEND FROM TOP OF CURB BACK TO A POINT AS DIRECTED BY THE THE PUBLIC WORKS DIRECTOR. THE TOP 4" OF BACKFILL SHALL BE OF A FINE GRADED MATERIAL SUITABLE FOR LAWNS, AND BE DAMPENED AND MECHANICALLY COMPACTED TO OBTAIN A REASONABLE LEVEL OF COMPACTION.

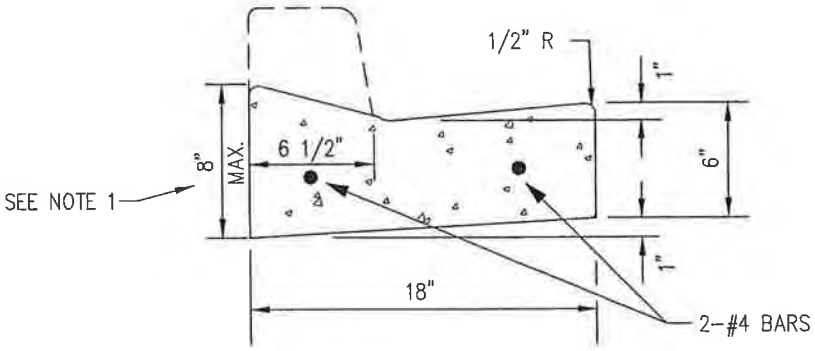

DEPRESSED – DRIVEWAY

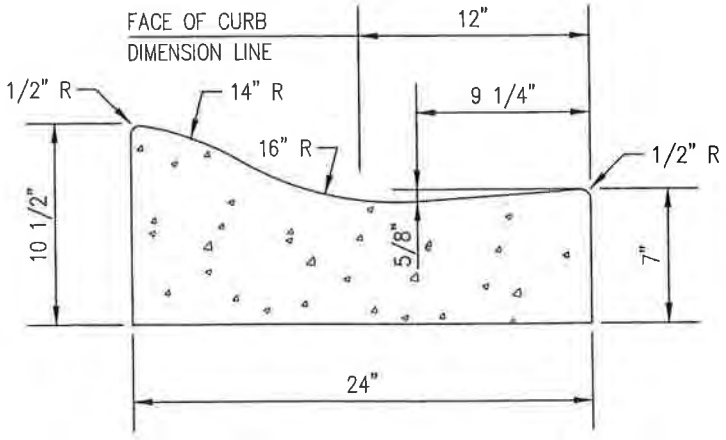

MOUNTABLE – ROLLED

NOTES:
- ONLY THE LATEST DETAIL, AS APPROVED BY THE DIRECTOR OF PUBLIC WORKS, SHALL BE USED.

Revision	Date	Description	Appr
ORIG.	10/06		

CITY OF ZILLAH–STANDARD DETAIL	CONCRETE CURB & GUTTER	ST–5

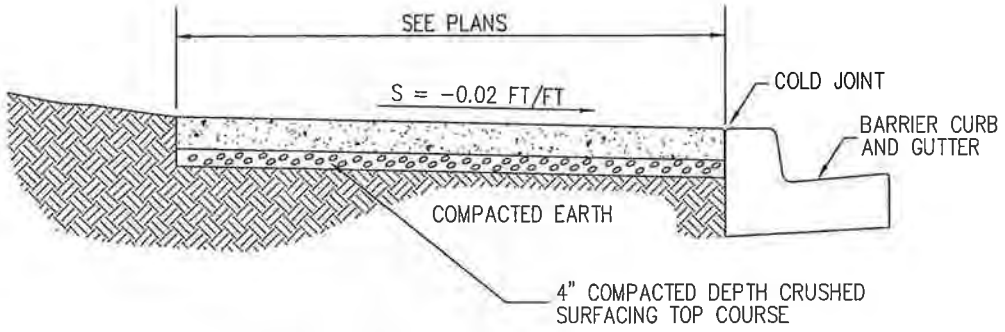

4" THICK SIDEWALK SECTION

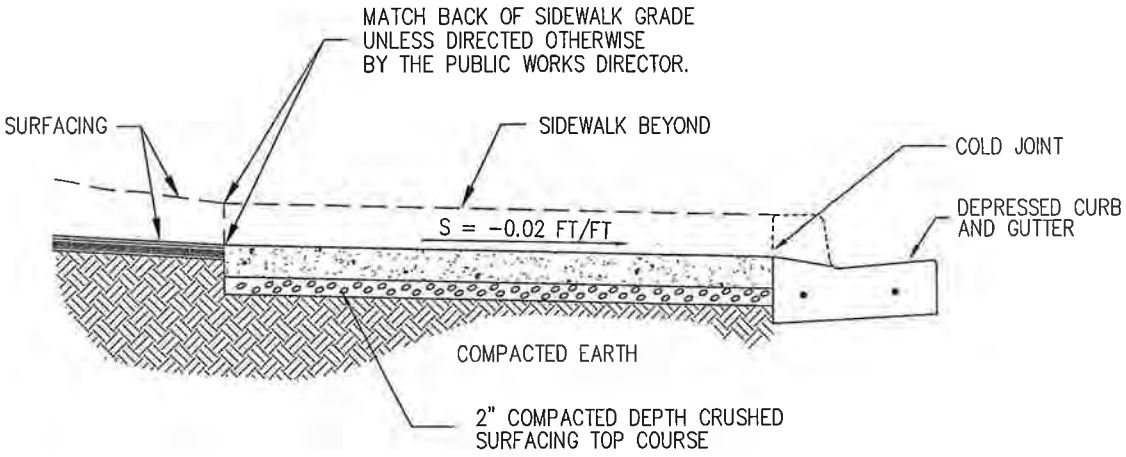

6" THICK SIDEWALK SECTION AT DRIVEWAY ENTRANCES AND BEHIND MOUNTABLE CURB

NOTES:
- ONLY THE LATEST DETAIL, AS APPROVED BY THE DIRECTOR OF PUBLIC WORKS, SHALL BE USED.

ORIG.	10/06		
Revision	Date	Description	Appr

CITY OF ZILLAH—STANDARD DETAIL	CONCRETE SIDEWALK SECTIONS	ST-6

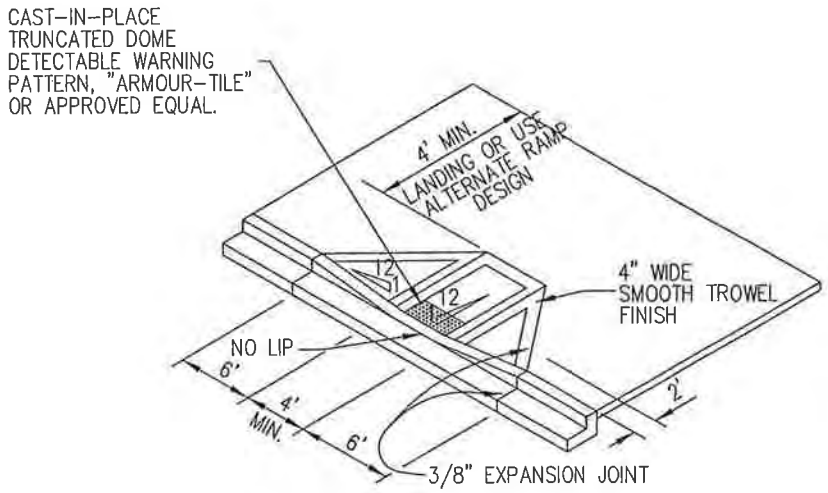

STANDARD

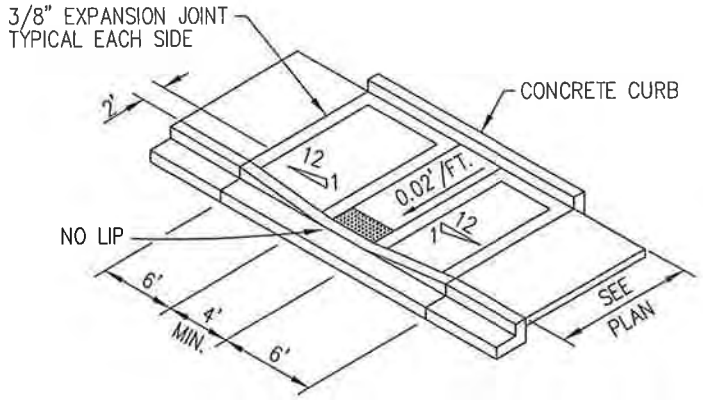

ALTERNATE

SIDEWALK RAMP DETAIL

NOT TO SCALE

NOTES:

- ONLY THE LATEST DETAIL, AS APPROVED BY THE DIRECTOR OF PUBLIC WORKS, SHALL BE USED.

Revision	Date	Description	Appr
ORIG.	10/06		

CITY OF ZILLAH-STANDARD DETAIL	SIDEWALK RAMP DETAIL	ST-7

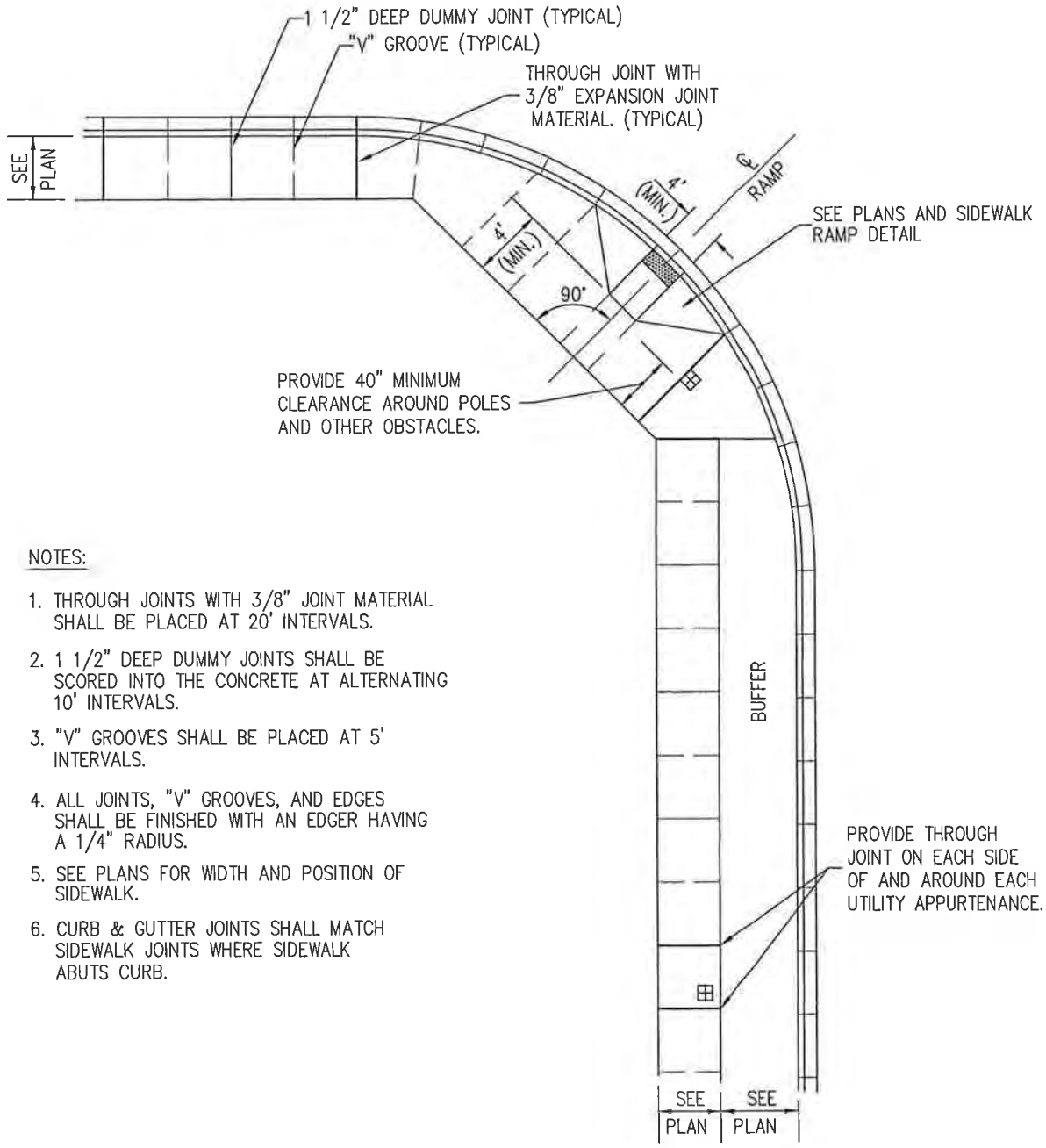

NOTES:

1. THROUGH JOINTS WITH 3/8" JOINT MATERIAL SHALL BE PLACED AT 20' INTERVALS.
2. 1 1/2" DEEP DUMMY JOINTS SHALL BE SCORED INTO THE CONCRETE AT ALTERNATING 10' INTERVALS.
3. "V" GROOVES SHALL BE PLACED AT 5' INTERVALS.
4. ALL JOINTS, "V" GROOVES, AND EDGES SHALL BE FINISHED WITH AN EDGER HAVING A 1/4" RADIUS.
5. SEE PLANS FOR WIDTH AND POSITION OF SIDEWALK.
6. CURB & GUTTER JOINTS SHALL MATCH SIDEWALK JOINTS WHERE SIDEWALK ABUTS CURB.

NOTES:

- ONLY THE LATEST DETAIL, AS APPROVED BY THE DIRECTOR OF PUBLIC WORKS, SHALL BE USED.

ORIG.	10/06		
Revision	Date	Description	Appr

CITY OF ZILLAH–STANDARD DETAIL	SIDEWALK JOINTING	ST–8

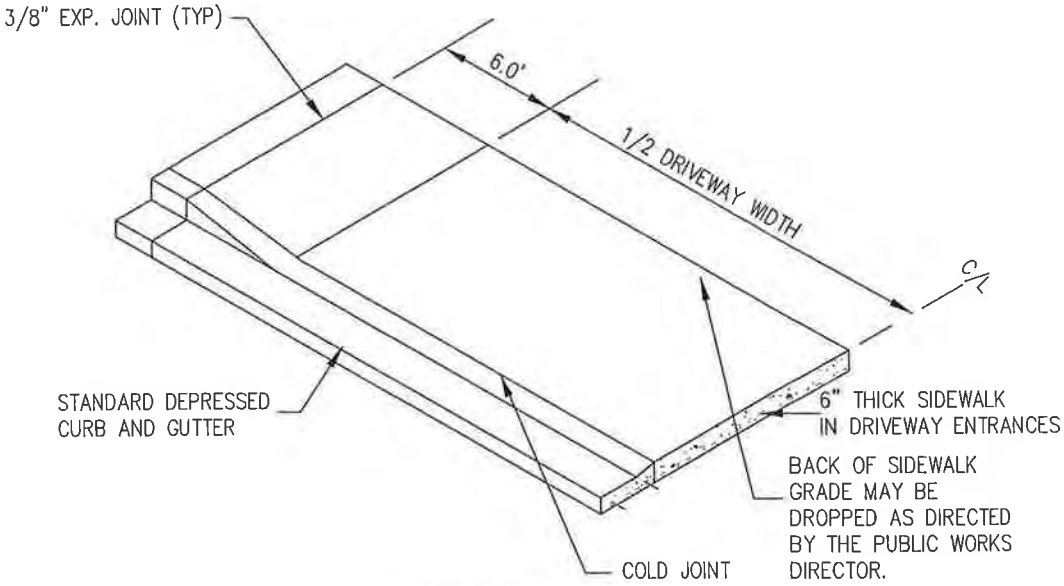

ISOMETRIC VIEW

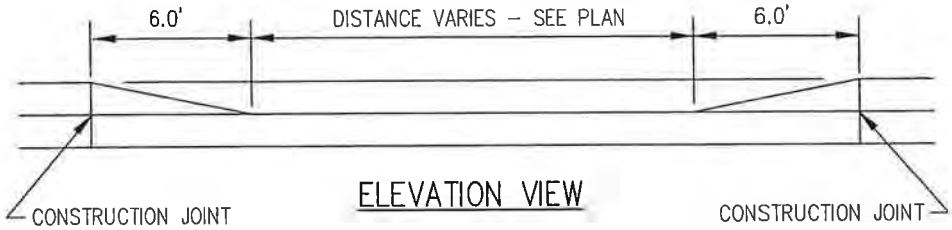

ELEVATION VIEW

NOTE:
REINFORCEMENT NOT SHOWN FOR CLARITY. EXTEND REINFORCEMENT TO CONSTRUCTION JOINTS.

RESIDENTIAL DRIVEWAY ENTRANCE

NOT TO SCALE

NOTES:
- ONLY THE LATEST DETAIL, AS APPROVED BY THE DIRECTOR OF PUBLIC WORKS, SHALL BE USED.

Revision	Date	Description	Appr
ORIG.	10/06		

CITY OF ZILLAH–STANDARD DETAIL	DRIVEWAY ENTRANCE	ST–9

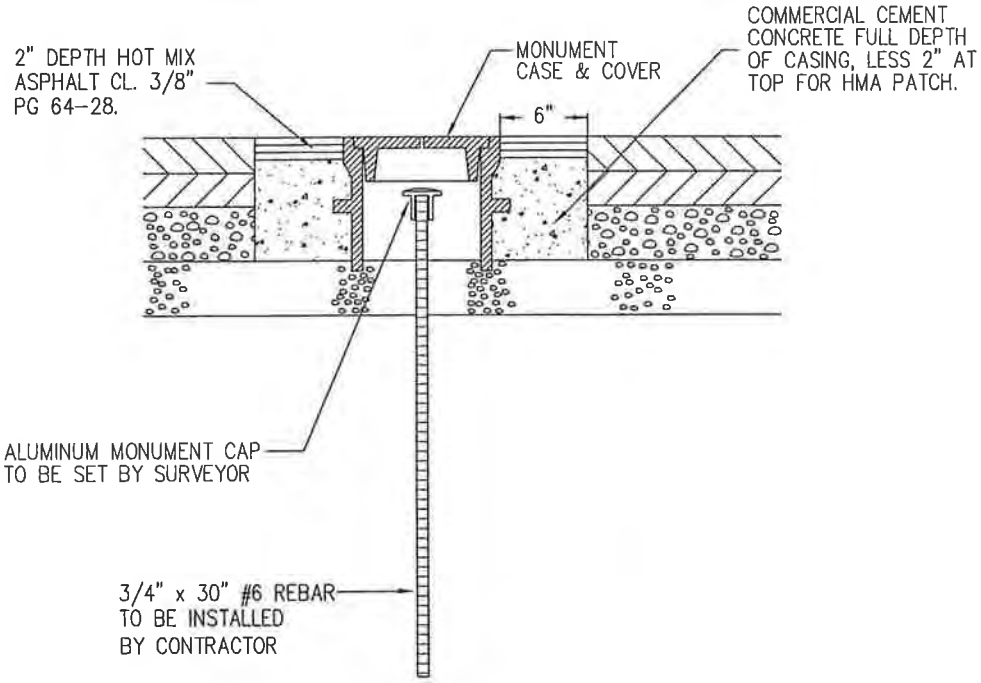

NOTES:

1. TOP OF MONUMENT CAP SHALL BE 3" BELOW FINISH GRADE.
2. MONUMENT, MONUMENT CASE & COVER TO BE PLACED AFTER FINAL LIFT OF HMA.
3. MONUMENT CASE, COVER AND RISERS SHALL BE THE REQUIREMENTS OF SECTION 9-22 AND MANUFACTURED BY OLYMPIC FOUNDARY OR EQUAL.

MONUMENT DETAIL

NOT TO SCALE

NOTE:
ONLY THE LATEST DETAIL, AS APPROVED BY THE DIRECTOR OF PUBLIC WORKS, SHALL BE USED.

ORIG.	10/06		
Revision	Date	Description	Appr

CITY OF ZILLAH-STANDARD DETAIL	MONUMENT	ST-10

C= $\mathcal{C}_L$ SLOPE APPROACHING RAMP

$$D = \frac{50}{(8.33 - C)}$$

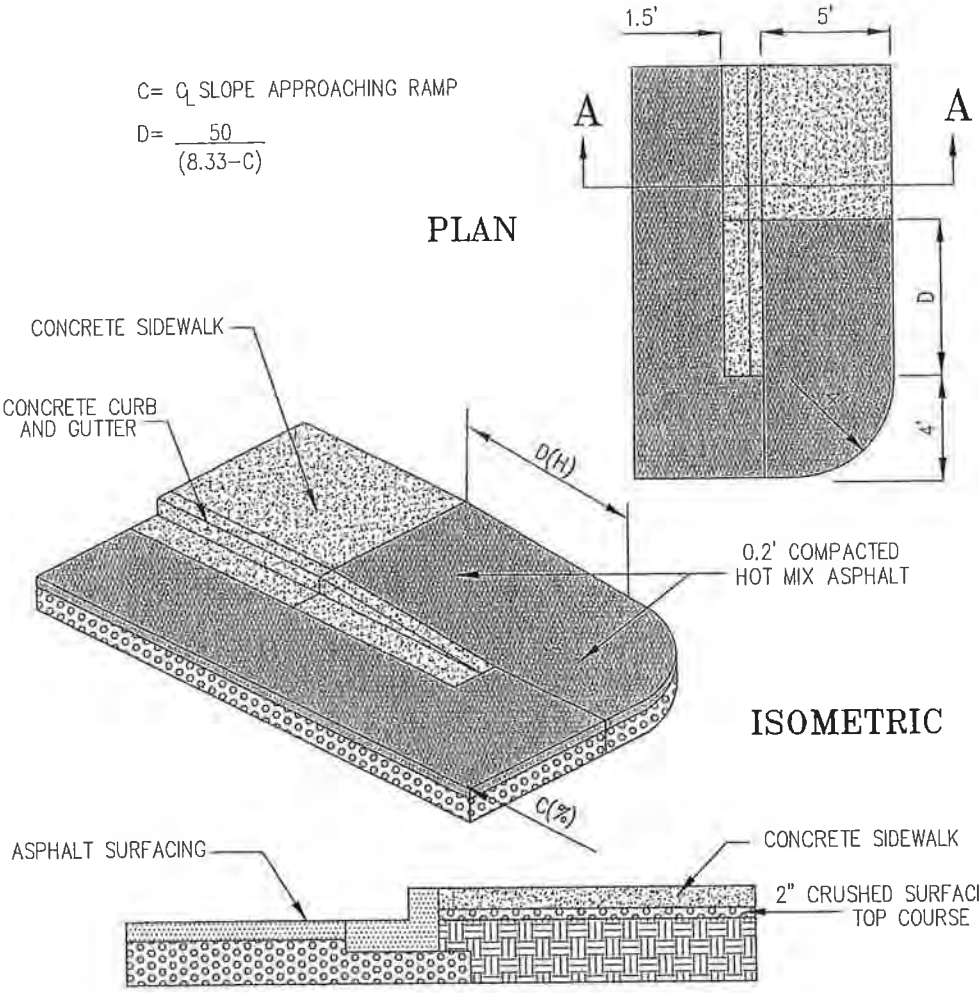

SECTION A–A

ASPHALT SIDEWALK RAMP DETAIL

NOT TO SCALE

NOTE:
ONLY THE LATEST DETAIL, AS APPROVED BY THE DIRECTOR OF PUBLIC WORKS, SHALL BE USED.

Revision	Date	Description	App
ORIG.	10/06		

CITY OF ZILLAH – STANDARD DETAIL

TRENCH SURFACING REPAIR

ST-12

NOTES:
- ONLY THE LATEST DETAIL, AS APPROVED BY THE DIRECTOR OF PUBLIC WORKS, SHALL BE USED.

Revision	Date	Description	Appr
ORIG.	11/06		

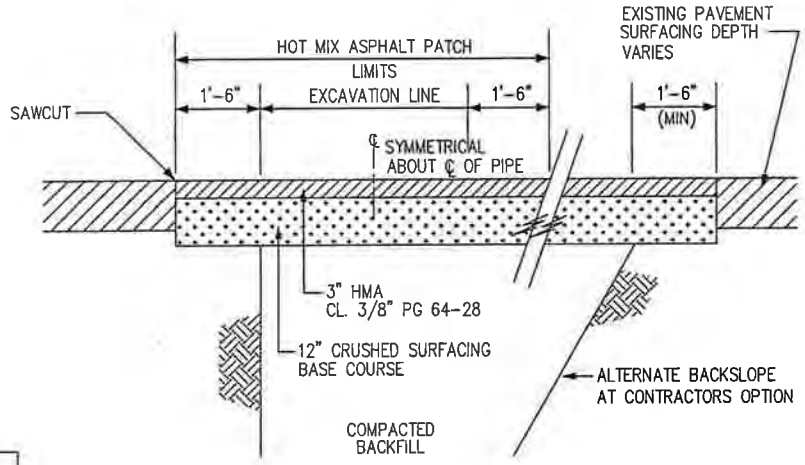

ASPHALT PAVEMENT SURFACING

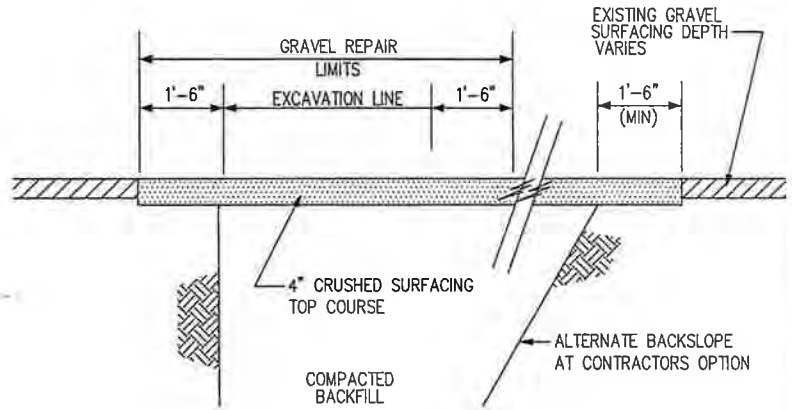

GRAVEL SURFACING

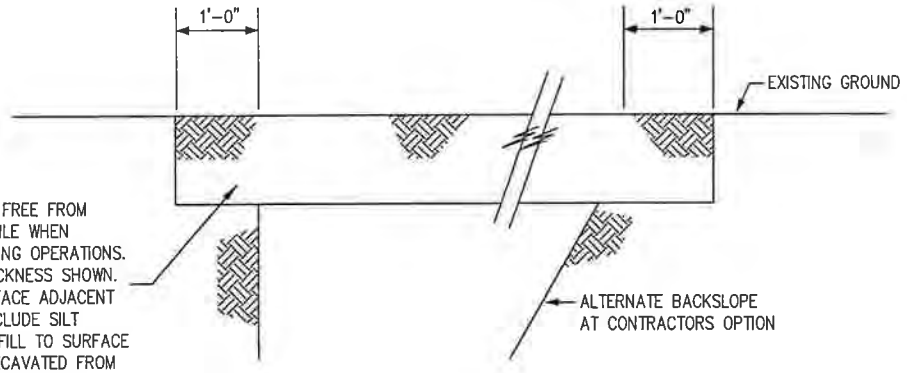

UNSURFACED AREAS

NOTES:
1. CONTRACTOR SHALL BE RESPONSIBLE FOR ALL TRENCH SURFACE RESTORATION BEYOND THE PAYMENT LIMITS SHOWN, INCLUDING WIDER TRENCH SECTIONS RESULTING FROM LAYING BACK TRENCH SIDES AT THE CONTRACTORS OPTION. NO MEASUREMENT OR PAYMENT WILL BE MADE FOR SURFACE REPAIR BEYOND THE PAYMENT LIMITS.
2. NO MEASUREMENT OR PAYMENT WILL BE MADE FOR TRENCH SURFACING REPAIR IN UNSURFACED AREAS.
3. HMA PATCHING WILL BE COMPLETED WITHIN THREE DAYS.
4. ALL THICKNESS ARE COMPACTED DEPTH.

TRENCH SURFACING REPAIR

NOT TO SCALE

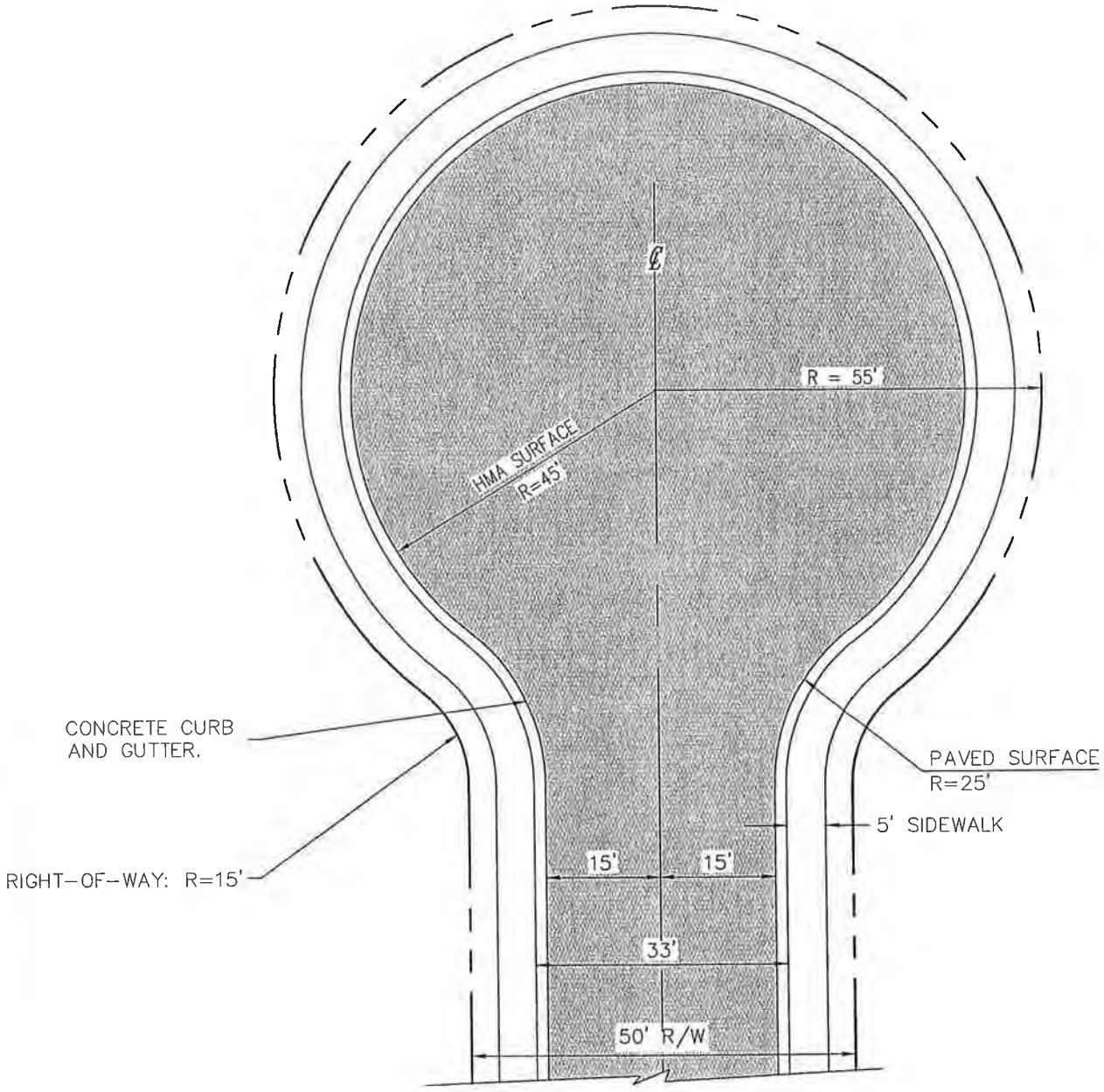

PLAN VIEW
NTS

NOTES:

- CUL-DE-SAC STREETS SHALL BE A MAXIMUM OF 500 FEET IN LENGTH.
- ONLY THE LATEST DETAIL, AS APPROVED BY THE DIRECTOR OF PUBLIC WORKS, SHALL BE USED.

Revision	Date	Description	Appr
ORIG.	11/06		

CITY OF ZILLAH-STANDARD DETAIL	FULL CUL-DE-SAC LAYOUT	ST-13

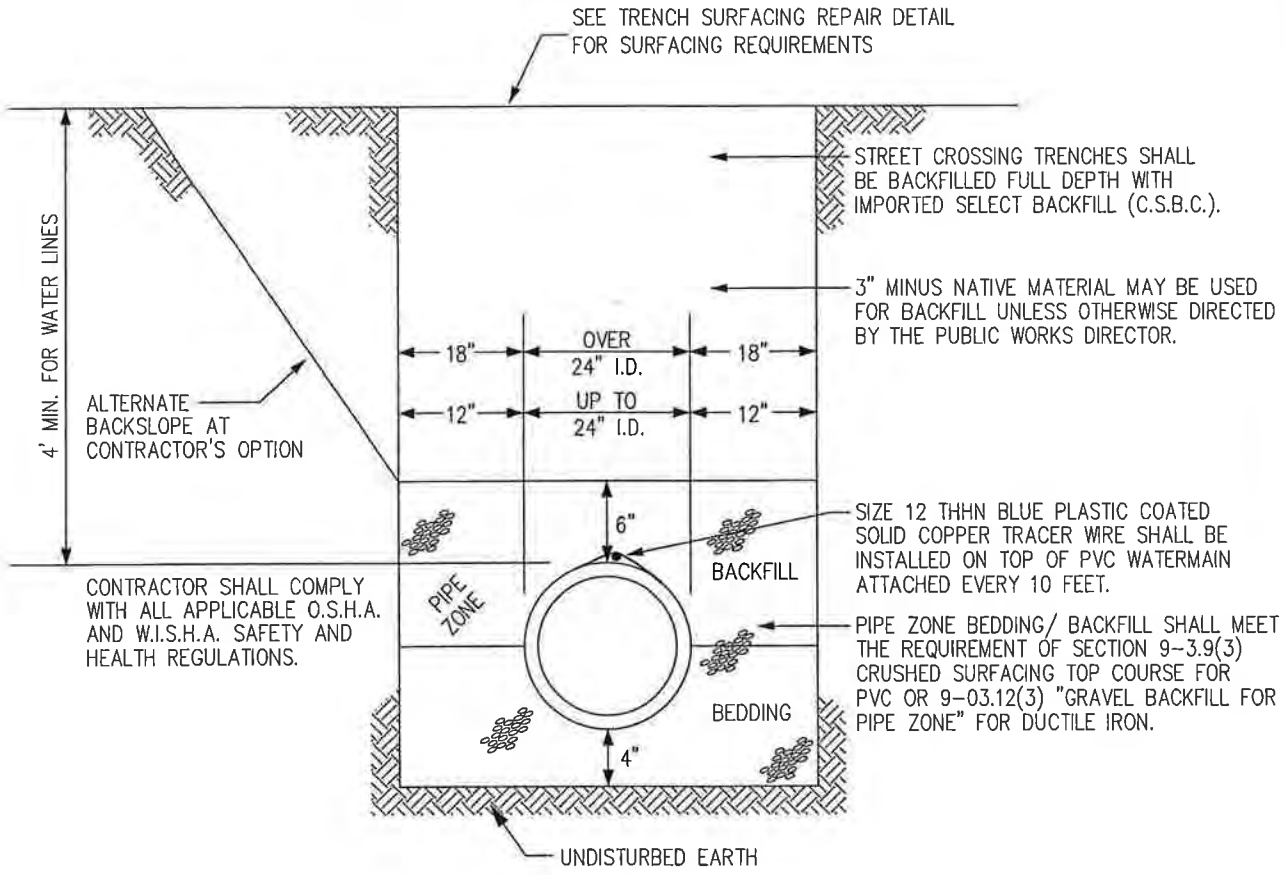

TYPICAL WATERMAIN TRENCH

NOT TO SCALE

NOTES:

- FOR WATER SERVICES, INSTALL IMPORTED PIPE BEDDING A MINIMUM OF 3" THICK ON ALL SIDES OF PIPE.
- MECHANICAL TAMPING AND COMPACTION REQUIRED AS DIRECTED BY THE CITY. WATER SETTLING MAY ONLY BE USED OUTSIDE THE ROADWAY PRISM WHEN APPROVED BY THE CITY.
- ONLY THE LATEST DETAIL, AS APPROVED BY THE DIRECTOR OF PUBLIC WORKS, SHALL BE USED.

ORIG.	11/06		
Revision	Date	Description	Appr

CITY OF ZILLAH–STANDARD DETAIL	WATERMAIN TRENCH	W–1

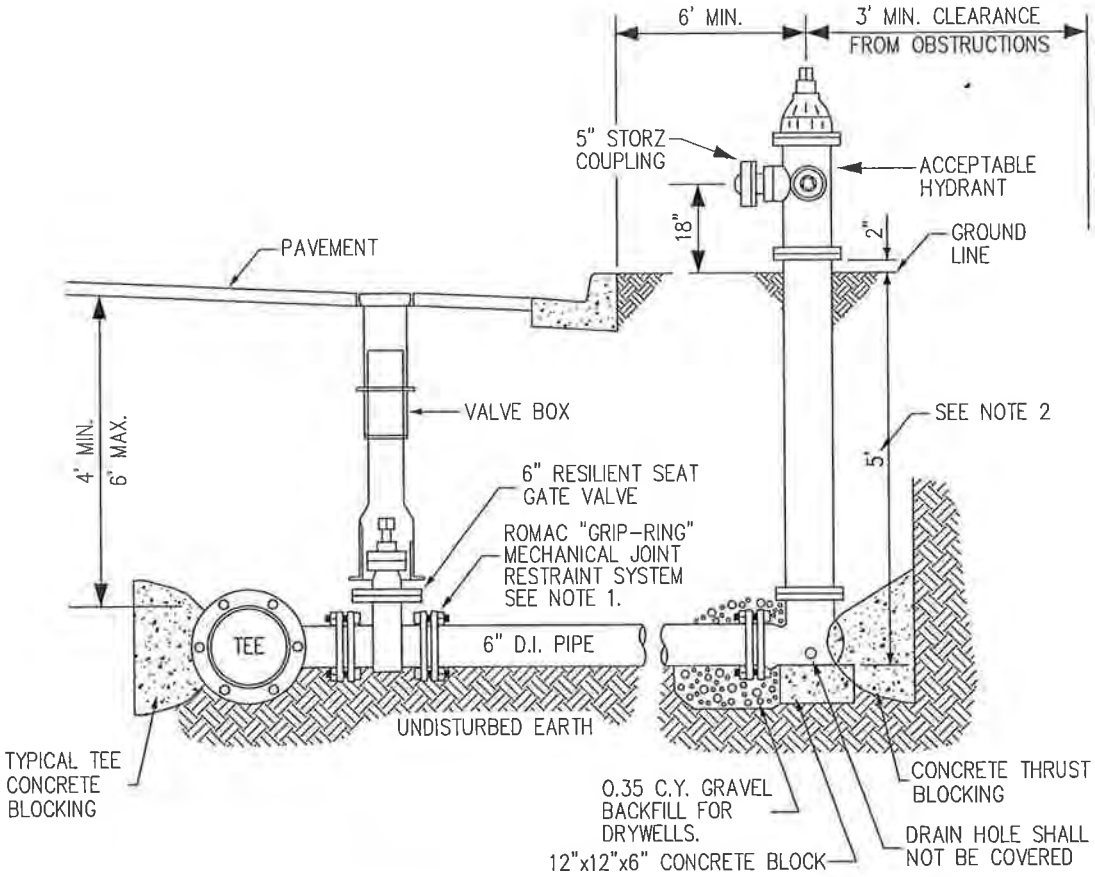

TYPICAL FIRE HYDRANT ASSEMBLY

NOT TO SCALE

ACCEPTABLE HYDRANTS:

- MUELLER CENTURION
- M&H 929 RELIANT

NOTES:

- ROMAC "GRIP-RING" MECHANICAL JOINT ACCESSORY PACK SHALL BE USED ON ALL MECHANICAL JOINT CONNECTIONS FROM TEE TO HYDRANT.
- MINIMUM HYDRANT DEPTH IS 5 FEET. THIS DISTANCE MAY INCREASE WHEN HYDRANTS ARE INSTALLED ON DISTRIBUTION MAIN SIZES LARGER THAN 6 INCHES IN DIAMETER.
- ONLY THE LATEST DETAIL, AS APPROVED BY THE DIRECTOR OF PUBLIC WORKS, SHALL BE USED.

ORIG.	11/06		
Revision	Date	Description	Appr

CITY OF ZILLAH–STANDARD DETAIL	TYPICAL FIRE HYDRANT	W–2

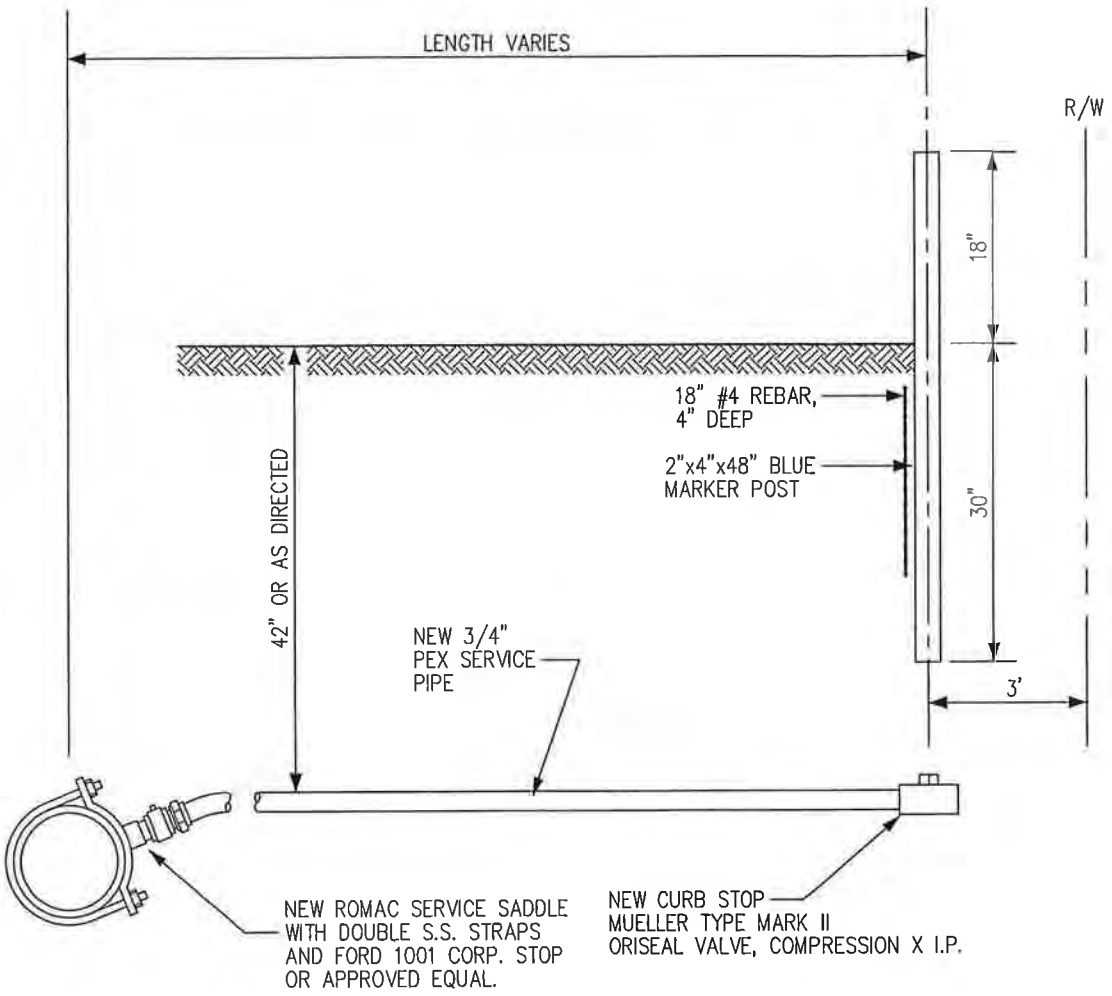

WATER SERVICE

NOT TO SCALE

NOTES:

- ONLY THE LATEST DETAIL, AS APPROVED BY THE DIRECTOR OF PUBLIC WORKS, SHALL BE USED.

ORIG.	10/06		
Revision	Date	Description	Appr

CITY OF ZILLAH–STANDARD DETAIL	WATER SERVICE	W–3

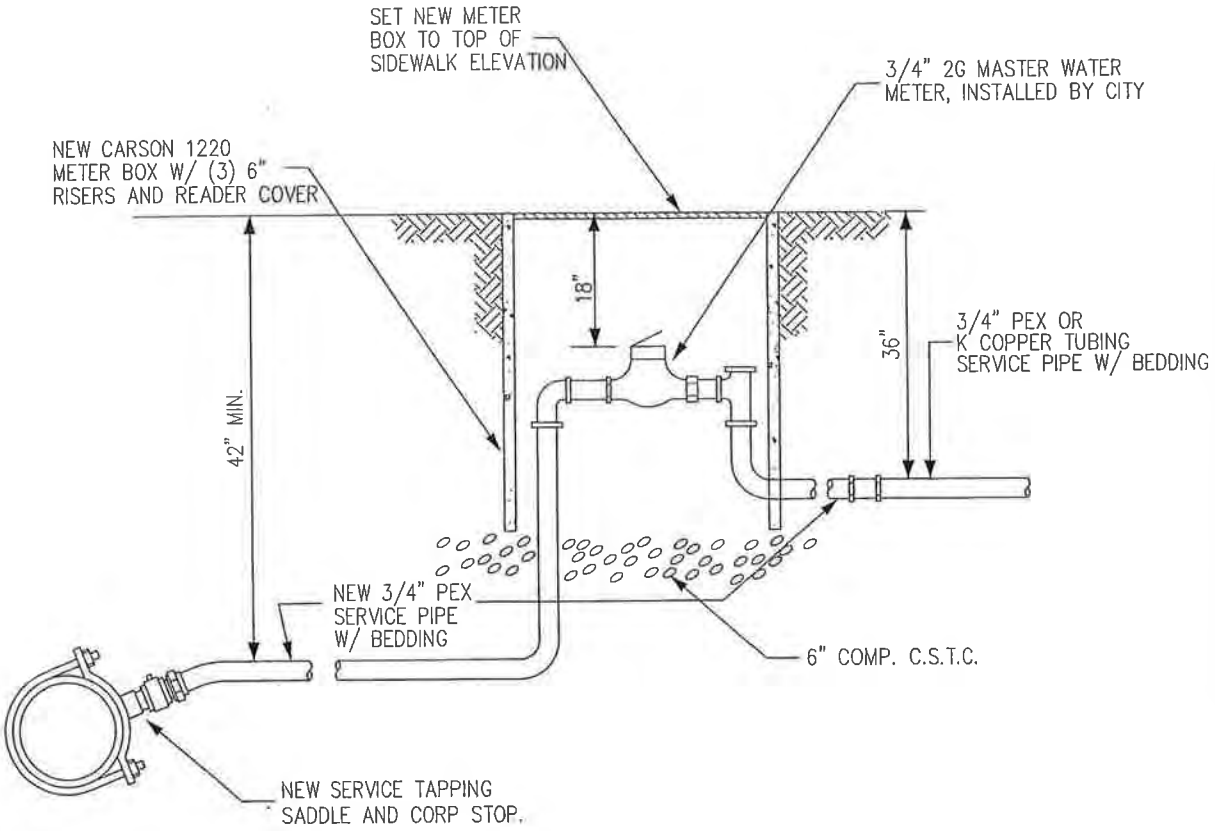

WATER METER BOX

NOT TO SCALE

NOTES:

- ONLY THE LATEST DETAIL, AS APPROVED BY THE DIRECTOR OF PUBLIC WORKS, SHALL BE USED.
- DO NOT TAP EXIST. WATERMAIN CLOSER THAN 18" TO JOINTS.

ORIG.	12/07		
Revision	Date	Description	A;

TOWN OF ZILLAH–STANDARD DETAIL	WATER METER BOX	W–4

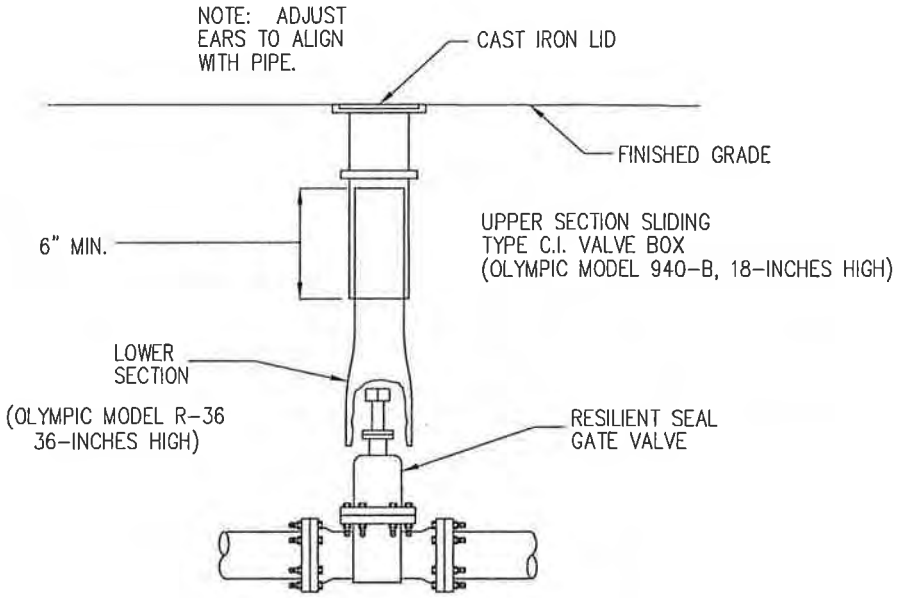

VALVE SIZE AND ENDS AS SPECIFIED OR INDICATED ON PLANS. INSTALLATION IS SIMILAR FOR BUTTERFLY VALVE.

NOTE: PROVIDE EXTENSION PIECE WHERE REQUIRED FOR VALVE BOX. (OLYMPIC MODEL 044, 12-INCHES HIGH)

WATER VALVE BOX

NOT TO SCALE

NOTE:
ONLY THE LATEST DETAIL, AS APPROVED BY THE DIRECTOR OF PUBLIC WORKS, SHALL BE USED.

ORIG.	10/06		
Revision	Date	Description	Appr

CITY OF ZILLAH-STANDARD DETAIL	WATER VALVE BOX	W-5

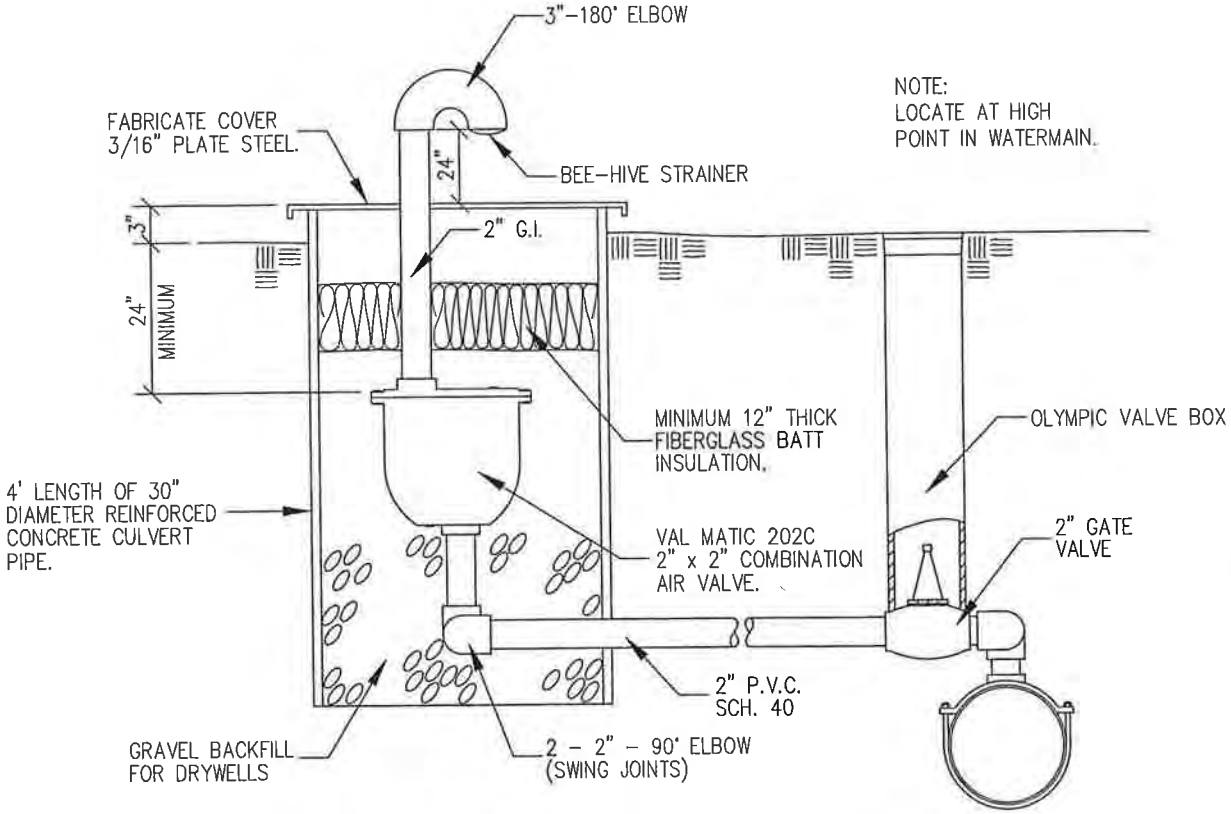

AIR RELEASE/AIR VACUUM VALVE ASSEMBLY

NOT TO SCALE

NOTES:

- ONLY THE LATEST DETAIL, AS APPROVED BY THE DIRECTOR OF PUBLIC WORKS, SHALL BE USED.

Revision	Date	Description	Ap
ORIG.	10/06		

CITY OF ZILLAH-STANDARD DETAIL	AIR RELEASE/AIR VACUUM VALVE	W-6

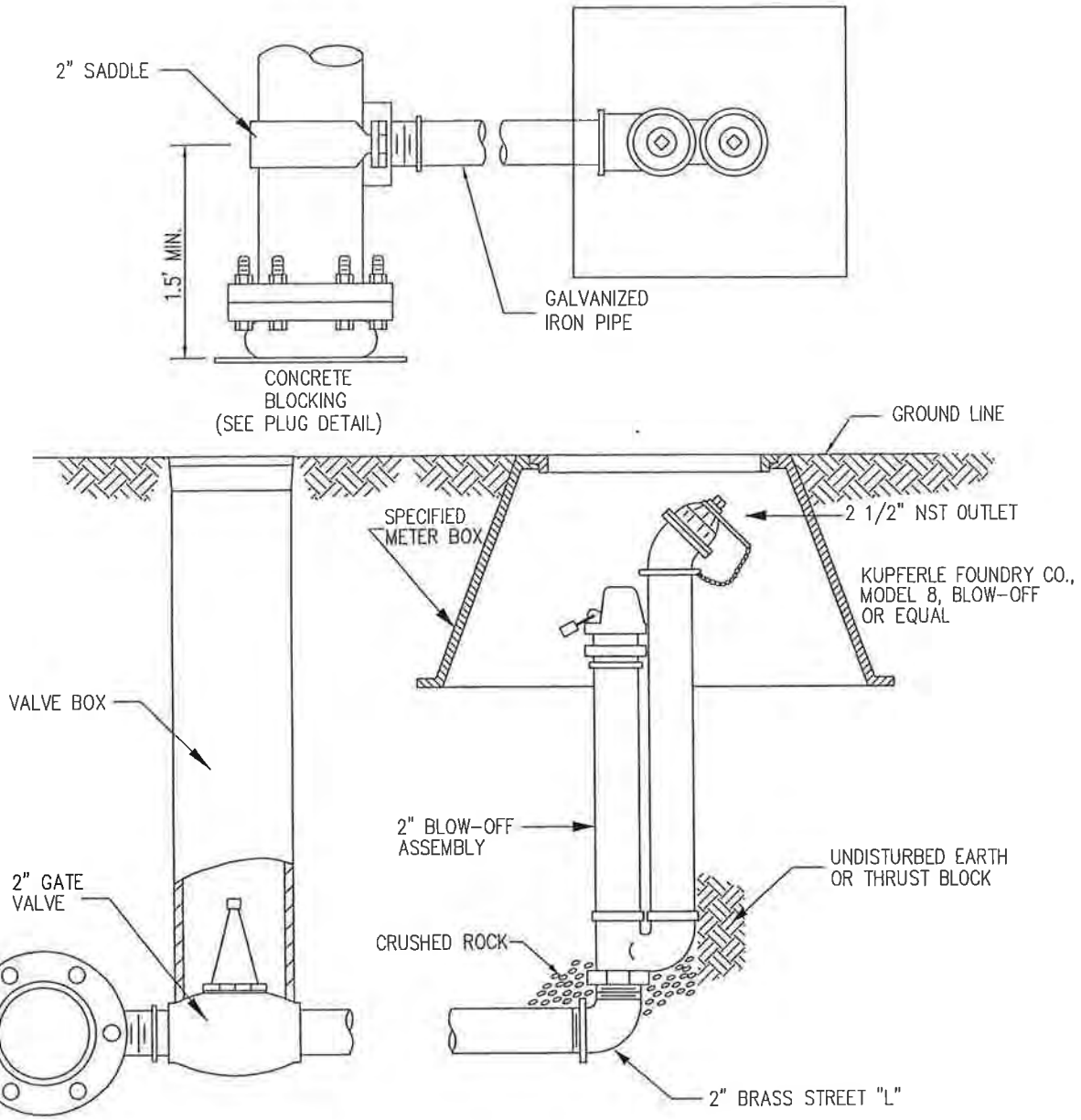

BLOW - OFF DETAIL

NOT TO SCALE

NOTE:
ONLY THE LATEST DETAIL, AS APPROVED BY
THE DIRECTOR OF PUBLIC WORKS, SHALL BE USED.

ORIG.	10/06		
Revision	Date	Description	Appr

CITY OF ZILLAH-STANDARD DETAIL	BLOW - OFF DETAIL	W-7

CITY OF ZILLAH – STANDARD DETAIL

TYPICAL THRUST BLOCKING

W-8

NOTE: ONLY THE LATEST DETAIL, AS APPROVED BY THE DIRECTOR OF PUBLIC WORKS, SHALL BE USED.

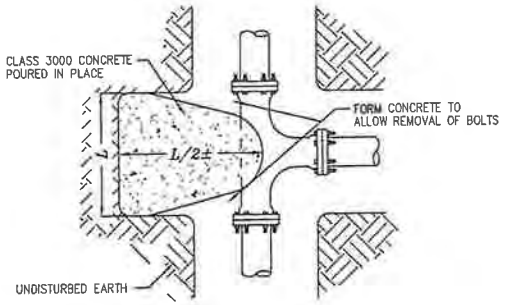

TEES

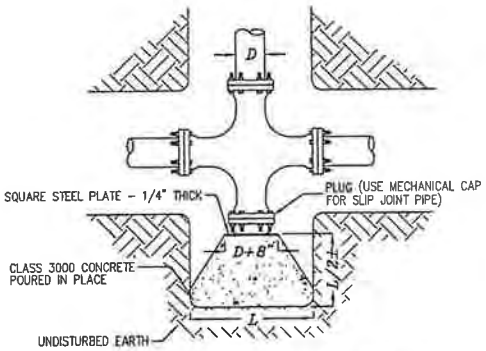

PLUGS AND CAPS

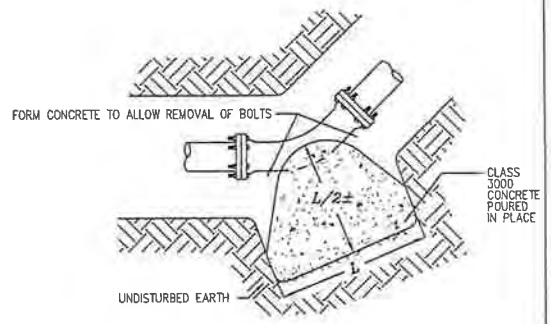

BENDS

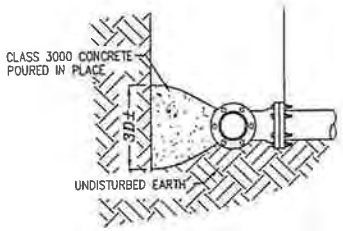

SIDE VIEW
THIS VIEW TYPICAL OF ALL BLOCKING

NOTES:

1. D IS APPROXIMATE PIPE DIAMETER. THE ABOVE END AREAS ARE BASED ON AN ALLOWABLE SOIL BEARING PRESSURE OF 1500 PSF AND 250 PSI TEST PRESSURE.
2. DIMENSIONS LISTED DENOTE MINIMUM STANDARDS FOR SOIL AND TEST PRESSURES SHOWN. SHOULD TEST PRESSURE AND/OR SOIL CONDITIONS VARY, THE CONTRACTOR SHALL CONTACT THE ENGINEER FOR SPECIAL THRUST BLOCK DESIGN.
3. ALL FITTINGS AND/OR PIPE MAKING DIRECT CONTACT WITH CONCRETE SHALL BE WRAPPED WITH 4 MIL POLYETHYLENE SHEETING PRIOR TO PLACEMENT OF CONCRETE.

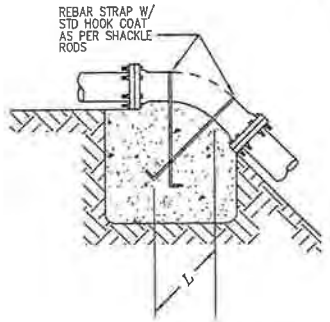

VERTICAL OVERBEND

MINIMUM END AREAS

PIPE SIZE (D)	TEES & PLUGS	90° BENDS	45° BENDS	11 1/4° AND 22 1/2° BENDS
6"	5.1 SQ FT	7.2 SQ FT	3.9 SQ FT	2.0 SQ FT
8"	8.8 SQ FT	12.4 SQ FT	6.7 SQ FT	3.4 SQ FT
10"	14.3 SQ FT	20.2 SQ FT	11.0 SQ FT	5.6 SQ FT
12"	20.4 SQ FT	28.9 SQ FT	15.7 SQ FT	7.9 SQ FT
14"	27.7 SQ FT	39.2 SQ FT	21.2 SQ FT	10.7 SQ FT
16'	35.8 SQ FT	51.2 SQ FT	27.5 SQ FT	13.9 SQ FT

VERTICAL OVERBEND

PIPE SIZE (D)	22 1/2° BEND	45° BEND	REBAR SIZE	L
6"	20 CU FT	39 CU FT	#5	2.0 FT
8"	34 CU FT	67 CU FT	#5	2.0 FT
10"	56 CU FT	110 CU FT	#5	2.0 FT
12"	79 CU FT	157 CU FT	#6	2.5 FT
14"	107 CU FT	212 CU FT	#7	3.0 FT
16'	139 CU FT	275 CU FT	#9	4.0 FT

TYPICAL THRUST BLOCKING

NOT TO SCALE

Revision	Date	Description	Appr
ORIG.	11/06		

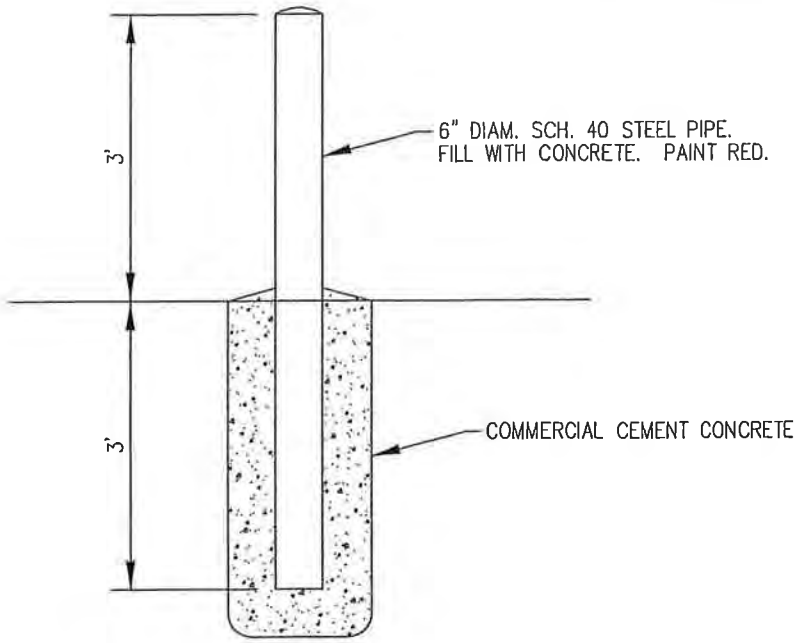

SECTION A–A

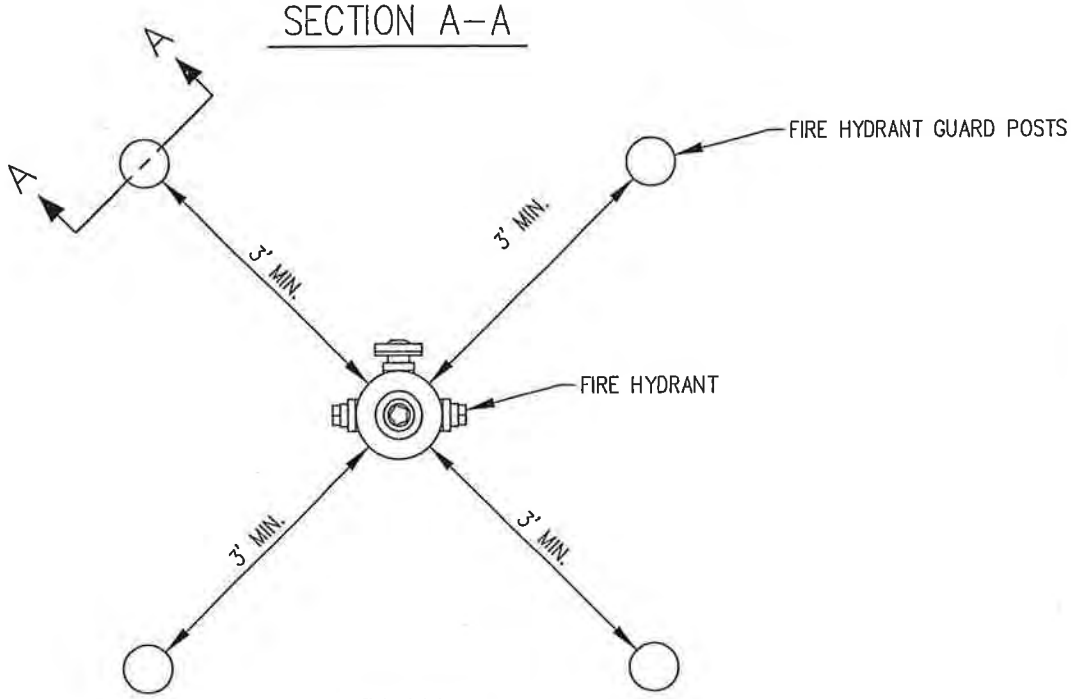

PLAN

FIRE HYDRANT GUARD POSTS

NOT TO SCALE

NOTE:
ONLY THE LATEST DETAIL, AS APPROVED BY THE DIRECTOR OF PUBLIC WORKS, SHALL BE USED.

ORIG.	11/06		
Revision	Date	Description	Appr

CITY OF ZILLAH–STANDARD DETAIL	FIRE HYDRANT GUARD POSTS	W–9

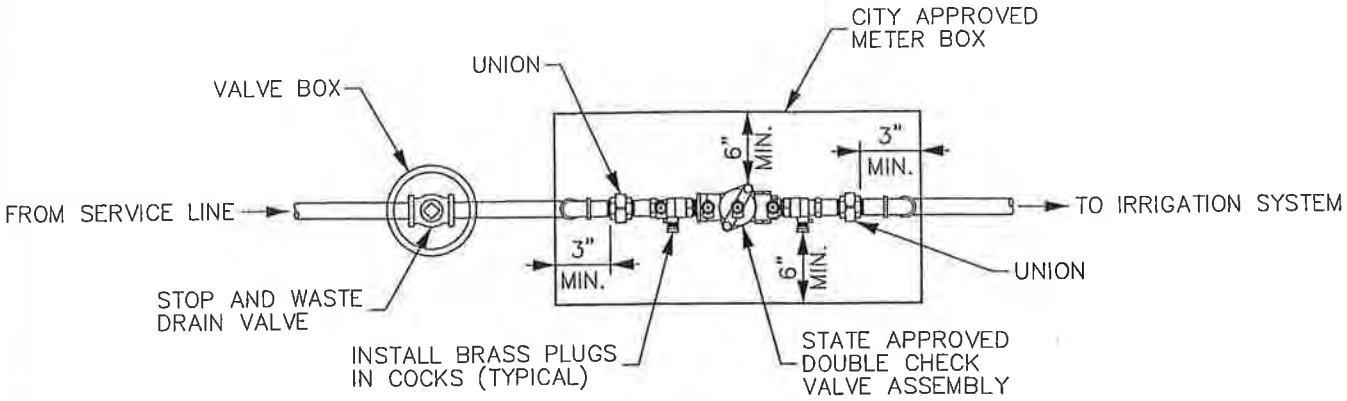

PLAN

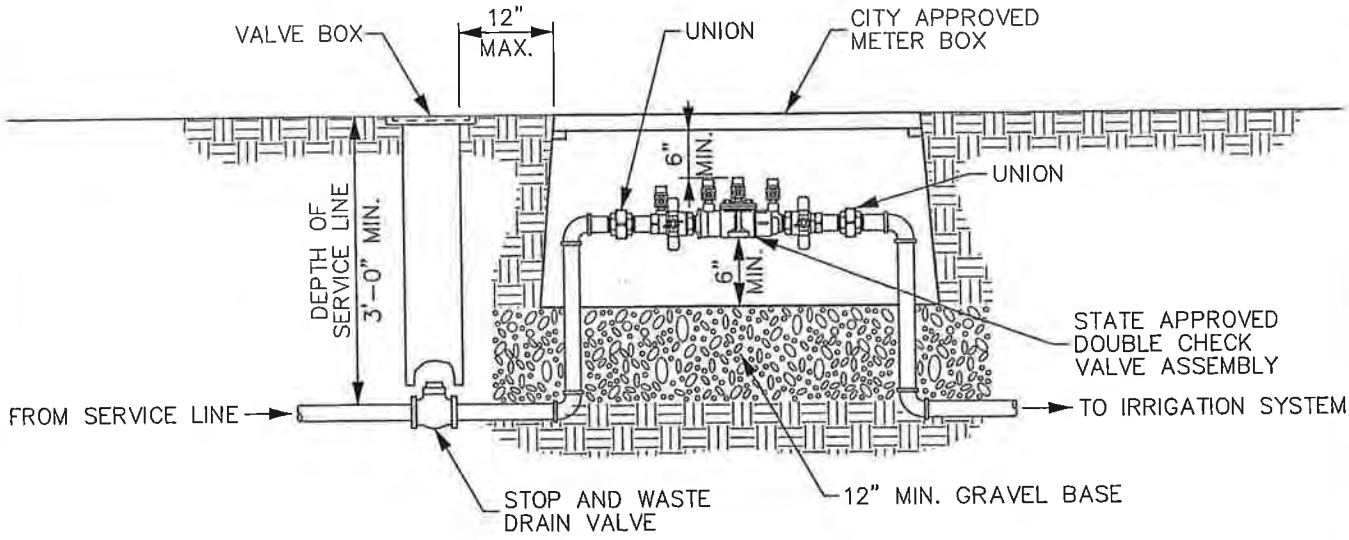

ELEVATION

NOTES:

1. DOUBLE CHECK VALVE ASSEMBLY SHALL MEET REQUIREMENTS OF THE AWWA "ACCEPTED PROCEDURE AND PRACTICE IN CROSS-CONNECTION CONTROL" MANUAL.
2. DEVICES MUST BE ON STATE DEPT. OF SOCIAL AND HEALTH SERVICES LIST OF "APPROVED CROSS CONNECTION CONTROL DEVICES."
3. METER BOX SIZE SHOULD BE SIZED TO PROVIDE THE MINIMUM CLEARANCES SHOWN IN THE DETAIL.

TYPICAL IRRIGATION BACKFLOW PREVENTOR (3/4" - 2")

NOT TO SCALE

NOTES:

- ONLY THE LATEST DETAIL, AS APPROVED BY THE DIRECTOR OF PUBLIC WORKS, SHALL BE USED.

ORIG.	12/07		
Revision	Date	Description	A_t

CITY OF ZILLAH-STANDARD DETAIL	IRRIGATION BACKFLOW PREVENTOR	W-10

CITY OF ZILLAH
UTILITY CONNECT
ORDER FORM

CITY OF ZILLAH
UTILITY CONNECT ORDER

DATE: _____ CONNECT DATE: _____

NAME:_____

STREET ADDRESS:_____

MAILING ADDRESS:_____

CITY/ZIP CODE:_____

PHONE #: _____

EMPLOYER: _____ PHONE: _____

RESIDENT SIGNATURE:_____

HOMEOWNER: _____ RENTER: _____

MAILING ADDRESS: _____

CITY/ZIP CODE: _____

-FOR OFFICE USE-

ACCOUNT #: _____

METER #: _____ METER MAKE: _____

READ ONLY: _____ READ/CONNECT: _____

CREW MEMBER: _____ DATE: _____

DEPOSIT $_____ DATE: _____ RECEIPT #: _____

DEPOSIT BOOK: _____ COMPUTER: _____

GARBAGE LIST: _____

SPECIAL INSTRUCTIONS:
RECEIVED CURRENT INFORMATION BROCHURE: _____

IRRIGATION: _____ **TURN OVER** ☛

-FOR OFFICE USE-

The following information is required by the Federal Government in order to monitor compliance with Federal laws prohibiting discrimination against applicants seeking to participate in this program on the basis of race, color, national origin, age, sex or disability. You are not required to furnish this information, but are encouraged to do so. This information will not be used in evaluating your application or to discriminate against you in anyway. However, if you choose not to furnish it, we are required to note the race/national origin of individual applicants on the basis of visual observation or surname.

Ethnicity
- ☐ **Hispanic or Latino**
- ☐ **NOT Hispanic or Latino**

Race
- ☐ **American Indian/Alaskan Native**
- ☐ **Asian**
- ☐ **Black or African American**
- ☐ **Native Hawaiian or Pacific Islander**
- ☐ **White**

Sex
- ☐ **Male**
- ☐ **Female**

This institution is an equal opportunity provider.
Esta institucion es de oportunidad igualada.

CITY OF ZILLAH
WORK ORDER FORM

CITY OF ZILLAH
WORK ORDER FORM

Call-ins requested by_____
Crew member_____

Complaint:_____
_____

Name_____ **Address**_____
Phone number _____ **Account #** _____
Date _____ **Date Resolved**_____

_____

Special instructions or description of the work done:

Crew member signature_____

Original – Public Works Director *Yellow – Crew* *Pink – Office*

ZILLAH FIRE DEPARTMENT HYDRANT FLOW TEST 2013

Date	Elevation	Time	Location	Static	Flow (GPM)	Residual PSI
12/16/2013	782	10:00	Zillah West	90	750	20
12/16/2013	837	11:00	Catholic Church	55	650	15
12/16/2013	807	2:00	1st Ave & Person St	75	1130	45
12/16/2013	856	2:13	Ellen & Concord	45	840	25
12/16/2013	849	2:22	1118 Reo Dr.	48	795	23
12/16/2013	801	2:41	Cheyne & Collins Place	66	940	32
12/16/2013	763	2:53	Fountain Blvd. (Z. Lakes)	86	1000	35
12/16/2013	752	3:27	Vintage Valley Parkway	90	1190	50
12/16/2013	826	3:42	Park St. & “F” St.	58	960	32
12/16/2013	826	3:54	1701 Cutler Way	62	840	25