WRIGHT-PIERCE
Engineering a Better Environment

Memorandum

Date: 8/12/2025

Project No.: 22183A

To: Town of Yarmouth, ME

From: Matt Burns & Brody Campbell, Wright-Pierce

Subject: Royal River Pump Station Evaluation

Background

The Royal River Pump Station (PS) was originally constructed in the 1960s and underwent a major upgrade in 1991. The Royal River PS sits to the east of the Rowe School in Yarmouth along the banks of the Royal River. The pump station conveys wastewater from the school and nearby community to the gravity sewer on Main Street. The force main (FM) from the station is asbestos cement pipe installed in the 1960s and extends from the Royal River Pump Station up to Main Street by the Library and terminates into the gravity sewer between Vespas and Bridge Street intersections on Main Street.

The Town obtained a future growth analysis through North Star Planning and tasked Wright-Pierce with evaluating the Royal River PS and force main (FM) capacity based on predicted growth and buildout in the next 15 years from the North Star Planning Memorandum and the approved Railroad Square Development. Given concerns with the age of the Royal River PS and its ability to handle flows from future development, Wright-Pierce was retained by the Town of Yarmouth to evaluate options for upgrading the Royal River PS and prepare a conceptual design.

Wright-Pierce and the Town met on June 24th, 2025 at the Royal River PS to view the condition of the station, discuss potential upgrades, and review potential site layouts. The goal of this evaluation and conceptual design is to:

- Evaluate alternatives for upgrades to the pump station
- Evaluate alternatives for upgrades to the force main
- Determine comparative cost between combined pump station and force main upgrades
- Select a specific conceptual design and establish a total project cost estimate to allow the Town to vote on a bond referendum in November of 2025.

Existing Conditions

The Royal River PS and force main has been in service for about 60 years (installed in 1965). While a major upgrade was completed in 1991, infrastructure from 1965 still remains. Flow from the Royal River PS is tributary to the downstream Harbor Pump Station, which is in the middle of design to upgrade the station to increase capacity and replace aging infrastructure.

Royal River PS has a dry well / wet well arrangement with a two-pump system that has a current capacity of 1,593 GPM with both pumps operating based on January 2025 drawdown data provided by the Town. A secondary wet well was added in 1991 and is primarily used to allow the main wet well to be taken offline and cleaned bi-annually. A removable slide gate in an upstream splitter manhole allows flow to be directed from the gravity sewer to either

the primary or secondary wet well. The primary wet well influent structure includes a manual bar rack to remove rags and debris. The Town currently cleans the influent bar rack twice a day.

The following conditions were observed at the Royal River PS and discussed with Town staff during the site visit on June 24th, 2025.

Pump Station

The pump station consists of a two-story brick façade building that consists of a subgrade pump room, an above-grade electrical room, and an influent screening channel with manual bar rack. Issues with existing conditions in each area are summarized below

Exterior

- The grating over the screenings channel is corroded.
- Some mortar of the brick façade has deteriorated and needs to be repointed. Some graffiti is also present on the side of the building.

Wetwell

- The secondary wetwell has to be pumped down periodically when not in use to remove groundwater that is infiltrating into the structure.
- The underside of the hatch into the wetwell is severely corroded.

Drywell/Pump Room

- The pumps, piping, and controls were all upgraded as part of the 1991 improvements of the station. The impeller on Pump 2 was replaced in 2023 to maintain its pumping capacity.
- The drywell walls are stained and show signs of groundwater infiltration.
- Access from the Electrical Room to the Drywell/Pump Room is by means of a very steep stair. While the ladder meets the OSHA requirements, access is limited.
- The stairs down to the drywell are loose and should be more firmly secured.
- The interior condition of the piping is unknown, but is likely corroded given the presence of grit in the wastewater.
- The space is grandfathered to the code requirements during the original construction in 1991, but if any modifications were made it would be considered a NEMA 7 Class I, DIV 2 space and all of the electrical gear would need to be upgraded to explosionproof.

Electrical Room

- The electrical distribution system and controls were upgraded as part of the 1991 upgrade, and include variable frequency drives (VFDs), power distribution panel, transformer, and control panel.
- Since the space is open to the Drywell/Pump Room below, if any modifications were made it would be considered a NEMA 7 Class I, DIV 2 space and all of the electrical gear would need to be upgraded to explosionproof, or the room would need to be physically separated from the Drywell/Pump Room below.

Other

- The fence and site are in good condition and well maintained.
- The influent splitter manhole to the station shows signs of its age and the stop gates used to direct flow to the secondary wetwell or influent channel are corroded and don't function properly.

- Power for the station is fed from a pole outside the fence on the west side of the station.
- A 100 kW exterior diesel generator in a sound-attenuated enclosure is located west of the pump station. The generator was upgraded as part of the 1991 upgrade and is sized to run the station during loss of power.

Force Main

- The force main was installed as part of the original construction project in 1965 and is 10-inch asbestos cement. The force main runs approximately 2,150 feet to Main Street and discharges to the gravity sewer in front of North Yarmouth Academy at sewer manhole SMH-20-35. The Town has not completed any comprehensive condition assessments of the force main to date.
- A bypass assembly was installed in 1991 which allows the station to be bypassed in an emergency or during construction. The bypass connection could be utilized during construction by isolating the force main from the pump station and pumping out of the secondary wet well.

Site

- There is a public walking path next to the river that goes by the pump station on the east side.
- The Town owns the pump station property and the abutting Rowe School property.
- There is a steady downhill slope from the Rowe School site that levels off at the pump station site and collects groundwater. In 2021 a drainage swale and underdrain with crushed rock was installed along the west side of the site fence and terminating by a culvert that runs under the paved driveway. The underdrain was installed to alleviate persistent groundwater that was ponding at the site.
- The Town indicated presence of a significant amount of groundwater in the area, and some was observed dripping into the secondary wet well through a conduit penetration.
- Borings done by Seaboard Drilling discovered bedrock 8.5 feet below surface just outside the fence, north of the generator building, and 7 feet below surface outside the gate on the east side of the secondary wet well. The borings did not indicate groundwater between the ground surface and the bedrock, but this does not match what the Town has historically observed, even after the installation of the underdrain.

Current Operations

The Royal River PS is visited twice a day by Town staff to observe general operations and rake the manual bar rack. Screenings are bagged and disposed of through general trash removal.

The existing station includes a two pump system with lead, lag controls and pumps that operate on VFDs that allow the pumps to adjust their speed based on level in the wetwell. The wetwell level is monitored by a single ultrasonic element. The pumps have a large turndown range, allowing the pumps to flow pace during low flows and to pump up to 1,000 GPM for Pump 1 and 1,400 GPM for Pump 2 based on drawdown testing (refer to Table 1 below). There is no flow meter at the station, so the low flow turndown of the existing pumps is unknown. Under normal conditions, one pump acts as the lead pump and only one pump is in operation. The pumps are manually alternated each morning by the operators during daily checks to balance the runtime on the pumps. During wet weather events, both pumps will turn on to keep up with flow. While historically the pump station has been able to keep up with influent flow, it is important to note that the pump station experienced a sanitary sewer overflow (SSO) during the January 2024 storm, which included approximately 14-inches of snow followed by 2-inches of rain.

The existing station has a primary and secondary wet well. For cleaning of the primary wet well, a stop gate in the splitter manhole upstream of the station is closed to direct flow away from the primary influent channel with

manual bar rack and instead diverts all flow to the secondary wet well which has a reduced overall volume. Pump 1 is used to directly pump out of this secondary wet well while the primary wet well is cleaned. If needed, both pumps could be valved to pump directly from the secondary wet well.

Drawdown tests were conducted in January of 2025 as part of the Railroad Square Development report. Results of the drawdown tests are included in Table 1.

Table 1 Royal River Pump Station Drawdown Results

	Pump 1	Pump 2
Manufacturer	Pentair (Fairbanks Morse)	Pentair (Fairbanks Morse)
Model	B5414	B5414
Motor HP	60	60
Nameplate Capacity	1,400 GPM 107 ft. TDH (46.3 psi)	1,400 GPM 107 ft. TDH (46.3 psi)
Drawdown Test Capacity[1] -Single Pump Operation	998 GPM 65 ft. TDH (28 psi)	1,384 GPM 92 ft. TDH (40 psi)
Drawdown Test Capacity[1] -Two Pump Operation	1,593 GPM 102 ft. TDH (44 psi)	

1. Based on drawdown tests performed by the Town on 1/31/2025
2. Pump 2 likely output significantly more flow than Pump 1 since the impeller for Pump 2 was replaced in 2023.

Flow Metering Program and Capacity Analysis

As part of the Town's broader evaluation of the Royal River Pump Station, this section focuses on the specific impacts of the proposed Railroad Square development. While the Railroad Square development introduces additional peak flow, it is not the sole driver for the recommended upgrades to the Royal River Pump Station. The need for improvements to the pump station have been previously established based on system age, performance limitations, and other projected growth identified in the North Star Planning Memorandum in the Royal River sewer shed. This analysis helps quantify how the Railroad Square project contributes to those existing capacity concerns and informs the sizing of future improvements.

Railroad Square of Yarmouth LLC has proposed the construction of 6 new buildings at Railroad Square in Yarmouth. These buildings will include 99 new residential units (mix of studio, 1 bedroom and 2 bedroom units) plus approximately 7,000 square feet of commercial/retail space. Wastewater generated from this development is proposed to connect to the existing sewer located in Main Street. It will flow by gravity to the Royal River Pump Station. The Town of Yarmouth hired Wright-Pierce to evaluate the impacts of the proposed Railroad Square development on the Town's sewer collection system. Specifically, whether the affected gravity sewer and Royal River Pump Station can handle the increased flow expected from the development, and if not, what options exist to

increase capacity to meet demand. The Railroad Square Development Wastewater Capacity Review document is included as an attachment to this Evaluation.

The Railroad Square Development Wastewater Capacity Review indicates that based on the drawdown test results and the proposed development flows, the Royal River Pump Station would not be able to convey current or expected peak flows from the development (1,614 GPM) even with two pumps operating (wastewater design standards require the peak flow to be conveyed with one pump out of service). The existing 10-inch force main would also be nearing the upper limit of recommended flow velocity at current and expected peak flow conditions (6.5 ft/sec).

Given the concerns with current and expected peak flows exceeding the capacity of the Royal River PS, the report evaluates alternatives to increase the pump stations capacity for handling future flows. The Town is in the process of replacing the impeller in pump 1 to increase the capacity of the pump back to its nameplate capacity as a short term measure. Longer term, the Town would like to move forward with an upgrade to the Royal River Pump Station and Force Main. Options for such an upgrade are outlined in subsequent sections of this evaluation.

Zoning

The Royal River Pump Station is located on a small site by the river next to the William H. Rowe School, with a public walking path between the station and the river. The lot is in a medium density residential (MDR) zone and shoreland overlay district, and there is no municipal exemption to the zoning code. The pump station lot is part of a "park" that falls under the jurisdiction of the National Park Service and any proposed modifications must be approved by them. The following setbacks from the property lines to structures must be met:

- Front: 15-feet
- Side: 10-feet
- Rear: 15-feet

The 1991 design drawings do not contain the lot boundary lines. The Town's GIS database shows the Royal River Pump Station located on a large parcel of land that also includes the adjacent Rowe School. Based on GIS data, all existing structures appear to meet the setback requirements. Attachment 1 provides approximate boundary lines and how the two proposed pump station alternatives will meet the setback requirements. The Town plans to hire Owen Haskell, Inc. to complete a boundary survey and site topography that will be used during preliminary design to site any new structures and comply with zoning setbacks.

The pump station site is not in the 100-year or 500-year floodplain. No known wetlands are present on the site. The pump station is within the shoreland overlay zone (250-foot setback from the Royal River).

Proposed Flows

The proposed flows for this project are based on a combination of factors including the medium growth estimates from the future growth analysis that was included in the Railroad Square Development application and North Star Planning Analysis.

- The Railroad Square Development will result in an estimated 60 GPM increase in peak flow to the station. Refer to the 2025 Railroad Square Development Wastewater Capacity Review for more information.

- The medium growth estimate from the North Star Analysis assumed the entire MDR zone would grow by 375 new units in 15 years. The average flow per unit is estimated as 180 gallons per day (GPD) based on the Maine Subsurface Disposal Rules. Only a portion of the MDR zone flows to Royal River Pump Station. Based on the number of lots currently served by the Royal River Pump Station, 52% of that MDR growth was allocated to the station. Based on 52% of the MDR growth and Railroad Square Development flows flowing to the Royal River Pump Station (195 parcels), the resulting total future peak flow for the station is 1,800 GPM (1,593 GPM current flows, 60 GPM Railroad Square Development, 146 GPM MDR growth). This is the flow carried as a basis for this design. The resulting flow from 100% of the MDR development flows going through the Royal River Pump Station would be equivalent to about 1,944 GPM. Based on discussions with the Town, this amount of development is not expected.

Evaluation of Alternatives

Based on discussions with the Town, the following alternatives were evaluated as feasible options for upgrading the Royal River Pump Station and force main to handle current and future flows.

The peak design flows outlined in the 'Proposed Flows' section form the foundation for evaluating the conceptual design alternatives. Each alternative must be capable of reliably conveying a peak flow of 1,800 GPM, which reflects projected growth within the sewer shed.

The Town requested that the pump station be conceptually designed with a three-pump configuration—two duty pumps and one standby—each capable of conveying the full design flow of 1,800 GPM, with two pumps operating capable of nearly 2,500 GPM. This three-pump configuration is being carried forward in the conceptual design and cost estimate. The final number of pumps and associated infrastructure will be confirmed during preliminary design.

Each evaluated alternative below is based around a three-pump configuration (two duty pumps and one standby) to provide operational redundancy and flexibility. These criteria establish the minimum performance requirements that all alternatives must meet and serve as the basis of design for the evaluation that follows.

Pump Station Alternative 1

Demolish the existing pump station in its entirety and replace it with a submersible station. To replace the existing station with a submersible station the following is proposed:

- Demolish existing pump station
  - Demolish above ground pump station building, generator, and housing
  - Demolish existing manual bar rack
  - Demolish existing pumps and piping
  - Demolish and fill below-grade pump room
  - Fill below-grade primary and secondary wet well
- New Wet Well
  - Excavate and install a new precast 12-foot diameter or similar sized rectangular wet well
  - Install three new submersible style Flygt N-impeller pumps with guide rails for removal
  - Install pump piping to new valve vault
  - Install fillets to direct wastewater to the pumps
  - Install level controls and monitoring system

  - Install new wet well cover and hatches
- New Valve Vault
  - Install new 6-foot by 10-foot valve vault
  - Install pump piping with check valves and gate valves
  - Install a new valve vault cover and hatch
- New Electrical Building and Generator
  - Install new 14-foot by 18-foot Electrical Building to house the transfer switch, primary distribution panel, pump VFDs, controls, and ADA bathroom
  - Install new skintight sound attenuated diesel generator
  - Install ductless heat pump in the Electrical Building to heat and cool the space
- Site
  - Install a ductbank from a new electrical service to the Electrical Building to provide power. A pole mounted transformer is assumed and the size of the transformer will be verified during design.
  - New site paving by the new structures for maintenance, plowing and accessibility
  - Install a new manhole on the influent gravity sewer to redirect flow to the new wet well
  - New bypass assembly with isolation valves

Pump Station Alternative 2

Comprehensive upgrade of the existing pump station to include a conversion of the existing primary wet well into a valve vault, retrofit of the existing pump room into a new wet well to house 3 new submersible pumps, demolition of the existing above grade structures (pump station and generator), and installation of a new electrical building and generator. The following is proposed for completing the station retrofit upgrade:

- Demolition of above ground structures and pump station components
  - Demolish the above-grade pump station building
  - Demolish existing pumps and piping in dry well
  - Demolish existing generator and housing
- Retrofit pump room into wet well
  - Install three submersible style Flygt N-impeller pumps with guide rails for maintenance
  - Install fillets to direct wastewater to the pumps
  - Install pump piping to the new valve vault
  - Install a divider wall to split the wet well into two sections with a slide gate between both sides to allow for isolation/cleaning
  - Install level controls and monitoring systems into both sides of the wet well
  - Install new wet well cover and hatches
- Retrofit primary wet well into valve vault
  - Install flowable fill in the wet well to the top of existing fillets and provide piping from the existing influent structure to the new wet well
  - Install pump piping with check and gate valves to the force main(s)
  - Install a new valve vault cover and hatch
- New Electrical Building and Generator
  - Install new 14-foot by 18-foot Electrical Building to house the transfer switch, primary distribution panel, pump VFDs, controls, and ADA bathroom
  - Install new skintight sound attenuated generator
  - Install ductless heat pump in the Electrical Building to heat and cool the space

- Site
  - Install a ductbank from a new electrical service to the Electrical Building to provide power. A pole mounted transformer is assumed and the size of the transformer will be verified during design.
  - New site paving by the Electrical Building and generator for maintenance, plowing and accessibility
  - New bypass assembly with isolation valves

Force Main Alternative 1

Alternative 1 for the force main upgrade includes installation of a new 12-inch HDPE force main installed parallel to the existing force main and terminating in a new terminus manhole in Main Street. The total length of the new force main would be approximately 2,150 feet and includes installation through wooded areas, paved areas, and in Main Street. The existing force main would be maintained and tied into the new force main via a valve and header.

Force Main Alternative 2

Alternative 2 for the force main upgrade includes installation of two new 12-inch HDPE force mains installed parallel to the existing force main and terminate in a new terminus manhole in Main Street. A redundant force main could be used in an emergency, or to divert a portion of flow to this force main if future flows exceed the expected design flow. The total length of new force mains would be approximately 4,300 feet and includes installation through wooded areas, paved areas, and in Main Street.

Force Main Alternative 3

Alternative 3 for the force main upgrade includes installation of one new 12-inch HDPE force main installed parallel to the existing force main and terminate in the same manhole in Main Street. This alternative also includes relining the existing 10-inch asbestos cement force main to increase its useful life and allow the force main to either be used in an emergency, or to divert a portion of flow to this force main if future flows exceed the expected design flow. Length of both relined and new force main is 2,150 feet each and includes installation through wooded areas, paved areas, and in Main Street.

Construction of any of the alternatives discussed above would be sequenced such that the existing flow capacity of the pump station would be maintained through bypass pumping out of the secondary or primary wet well and maintaining flow through the existing force main as the installation of the new pipe(s) occur.

Gravity Sewer Considerations

As part of the conceptual design for the Royal River Pump Station upgrades, it is important to evaluate not only the pump station and force main capacity, but also the downstream gravity sewer system that conveys flow from the force main discharge to the Harbor Pump Station. The Town has expressed concern that certain segments of this gravity sewer may be undersized to accommodate the proposed peak flow of 1,800 GPM from the upgraded Royal River Pump Station. Town staff noted that surcharging has been observed in this section of pipe during high flow events.

The discharge of Royal River Pump Station transitions to gravity sewer along Main Street near North Yarmouth Academy. The gravity sewer pipe varies in size from 10-inch to 24-inch in diameter and runs along Main Street, Portland Street, cross county to Marina Road, and Lafayette Street before discharging to the Harbor Pump Station. Survey invert data of the gravity sewer manholes was not available during the time of this analysis to calculate the theoretical capacity of the sewer. Based on minimum industry acceptable slopes for pipes of that size a section of the gravity sewer is undersized and not capable of handling the proposed 1,800 GPM from Royal River Pump

Station. Existing sections of 10-inch and 12-inch gravity sewer (approximately 1,400 linear feet of pipe) that are under capacity from Portland Street to Marina Road are recommended for replacement with larger diameter PVC pipe capable of handling the pump station design flow rate.

The Town is in the process of completing a survey of the gravity sewer and the extent of gravity sewer modifications will be reviewed during preliminary design and adjusted as needed based on the survey results. For the purposes of this conceptual design, replacement of the gravity sewer from Portland Street (SMH 20-32) to Marina Road (SMH 20-18A) has been assumed (approximately 1,400 linear feet of pipe). The cost estimate assumes existing pipe will be replaced with 24" diameter pipe.

Basis of Design

Pump Station

The proposed pumping system was modeled over a range of flows to determine the total dynamic head of the system so that pump selections could be made. To meet Technical Report # 16 Guides for the Design of Wastewater Treatment Works by NEIWPCC, which is the guideline the Maine Department of Environmental Protection (DEP) follows, the peak hourly flows need to be conveyed with the largest pump out of service. The hydraulic model was set up assuming 1 pump handles all of the flow, with the second and third pumps offline. Models were developed for the two pump station alternatives listed above; given the similarity in pipe lengths, valves and depths, the calculated total dynamic head of the system did not vary significantly between these two alternatives and the same pump selection will work for either option. The pump station design point used is 1,800 GPM at 68.5' total dynamic head (TDH).

Flygt provided pump selections utilizing their N-impeller pump, which has a good record of reliability and minimal clogging in these types of applications. The selected pump has a range of 600 GPM to 1,800 GPM and would be set up in a lead / lag / standby configuration. Table 2 below summarizes the basis of design for the pump station pumps

Table 2 Pump Station Pumps – Basis of Design

Parameter	Value
Application	Raw wastewater pumping
Number of Units	Three identically-sized pumps
Capacity	Minimum Flow: 600 GPM @ 47.1 ft TDH (one pump operating) Peak Flow: 1,800 GPM @ 68.5 ft TDH (one pump operating) Peak Flow: 1,220 GPM per pump @ 82.5 ft TDH (2,440 GPM with two pumps operating)
Discharge Diameter	8-inch
Motor Rating	60 HP, TEFC, Class 1 Division 1 460 VAC, 60 Hz, 3 phase
Acceptable Manufacturer	Flygt, NP 3202 MT 3~ 640

Suggested wet well level setpoints are included in Table 3 below. The setpoints are necessary to determine the overall depth of the proposed wet well. The Lag pump setpoints were not included as only one pump is required to pump the full design flow. Elevation 0 is the elevation of the bottom of the wet well. The low-low float switch allows the submersible pumps to maintain their required minimum submergence level. The submersible station will be equipped with a 12-foot diameter wet well.

Table 3 Proposed Wet Well Level Setpoints

Pump Operation	New Submersible Station Wet Well Level (ft)	Retrofit Existing Station Wet Well Level (ft)
Grade	12.5	10.9
High-High Float Switch	7.6	6.1
High Level Alarm	7.1	5.8
Lead Pump On	6.1	4.8
Lead Pump Off	3.0	3.0
Low Level Alarm	2.5	2.5
Low-Low Float Switch	1.6	1.6

The wetwell design provides 3.1 feet of operating depth for the submersible pumps which corresponds with an operating volume of 2,620 gallons. The wetwell design has been sized to limit pump starts per hour to a maximum of 15, which is well below the manufacturer's recommended maximum 30 starts per hour.

Force Main

Force main(s) should be sized to maintain a velocity of 3 ft/sec to 5 ft/sec with one pump operating at the duty point (1,800 GPM in this case). Velocities below 2-3 ft/sec may lead to solids settling out in the force main and velocities above 5 ft/sec lead to additional wear on the pipe and headloss and therefore larger pumps and electrical equipment needed to pump the same amount of flow. At 1,800 GPM a 12-inch HDPE DR17 pipe is recommended. The inside diameter of the pipe (11.6-inches) leads to a flow velocity of 5.5 ft/sec at 1,800 GPM. This is slightly above the recommended range but does not result in excessively large pumps. The 12-inch force main also maintains a flow velocity of 1.8 ft/sec at the minimum pump turndown of 600 GPM. This is slightly less than 2-3 feet, however, routine operation of the pumps at higher flow rates will result in resuspension of settled solids.

Cost Estimate

An engineer's opinion of cost was developed for each alternative described above. The estimated cost to construct the proposed facilities was developed using standard cost estimating procedures utilizing conceptual design layouts, equipment quotations, and unit cost information. The cost estimate includes new equipment costs and associated ancillary costs such as process piping, architectural modifications, structural modifications, instrumentation and controls, and electrical modifications to support the equipment. Where appropriate, information derived from recent construction cost data was incorporated. The cost estimate also considers costs

such as mobilization/ demobilization, contractor's overhead markup, construction contingency, technical services, materials testing, and administrative fees. The estimate includes the following additional items:

- General Contractor overhead & profit of 7.5%
- General Contractor markup on sub-contractors of 5%
- General Conditions (general contractor cost to manage the project, bonds, insurance, etc.) of 10%
- Contingency during this phase of work of 20% to account for items and details unknown at the conceptual design phase
- Construction cost inflation to midpoint of construction of 7.0% (annual inflation rate of 3.0% for 2.5 years).
- A construction contingency of 5% to account for change orders during the construction phase
- Engineering design, bidding, and construction phase services at 22% of the construction cost
- Materials testing allowance of 0.75% of construction cost
- Legal/Administrative allowance of 2.0% of construction cost to account for bond counsel, legal review of the contract documents
- Financing allowance of 1.0% of construction cost

This cost estimate was based on an Engineering News Record (ENR) Construction Cost Index of 13839 (June 2025). The conceptual design project cost estimates for the alternatives evaluated are summarized below in Table 4. Each alternative was determined to be technically feasible.

Table 4 Engineer's Opinion of Project Cost

Project	Engineer's Estimated Project Cost
Pump Station	
Alternative 1 - New Submersible Station	$ 2,964,000
Alternative 2 - Retrofit Existing Station	$ 2,752,000
Force Main	
Alternative 1 - New Force Main	$ 1,692,000
Alternative 2 - Two New Force Mains	$ 2,904,000
Alternative 3 - New Force Main and Reline Existing Force Main	$ 2,407,000
Gravity Sewer	
Replace 1,400 Feet of Gravity Sewer	$ 1,345,000

A breakdown of the construction costs and project costs for each alternative are attached.

The current construction cost market is volatile due to the labor shortage and the significant volume of work available for the limited number of contractors that perform this type of work in your area. The number of bids received on recent projects has significantly affected the bid price compared to the engineer's estimate. Projects

that were viewed by potential bidders as difficult projects that present too much risk, or are too far to travel to, or the schedule is too demanding have received limited to no bidders recently. Yarmouth is easily accessible of I-295, is close to a metropolitan area, the project is relatively straight forward, and the construction cost does not exceed the typical wastewater contractor's bonding capacity. It is anticipated that this project will receive more than one bidder; however, this cannot be guaranteed. We recommend carrying a higher than typical contingency in design cost estimates until reasonable bids are received.

Recommended Alternative

Table 5 summarizes the pros and cons of each alternative.

Table 5 Summary of Pros and Cons for each Alternative

Alternative	Pro	Con
Alternative 1: PS Alt 1: Precast Submersible Station	• All components of the station are new • Wet well and pump layout not limited by the footprint of the existing station • Less time for bypass pumping compared to retrofit • Can install new station while existing is still in service	• Highest capital cost • Requires braced excavation that will require groundwater dewatering and ledge removal
Alternative 2: PS Alt 2: Retrofit Station to Wet well / Valve Vault	• Reuse concrete to reduce deep excavation, shoring and groundwater dewatering as compared to a new submersible station • Less cost than new station	• Extended bypass pumping compared to new station • Existing infrastructure is being reused and may not have as long a life expectancy as new station
FM Alt. 1: New HDPE FM	• All new components • Lowest capital cost	• Single new force main – existing pipe to be tied into new pipe and not rehabilitated
FM Alt. 2: Two New HDPE FMs	• Provides capacity for future growth • All new components • Single trench excavation for both pipes	• Highest capital cost • Does not reuse existing FM • More difficulty installing dual pipes through existing infrastructure on Main Street
FM Alt. 3: New HDPE FM and Reline Existing	• Provides capacity for future growth • Reuses existing infrastructure	• Relining may not fix issues in the existing force main like high/low points • Requires different contractors to install new pipe and to reline existing

Wright-Pierce discussed each alternative with the Town during a meeting on July 8th, 2025. In order to minimize bypass pumping and to provide redundancy and adequate capacity for future growth, the Town prefers Pump Station Alternative 1 (new submersible station) and Force Main Alternative 2 (two new force mains). The gravity sewer needs to be replaced regardless of pump station and force main alternative selected. The exact extents of replacement will be determined during preliminary design once survey results become available.

The estimated project cost of the selected alternatives is **$7,213,000.** This is an AACE Class 3 cost estimate prepared in accordance with AACE guidelines. Level 3 cost estimates are based on preliminary information and typically range from -20% to +30% as illustrated in

Figure 1.

Figure 1 Total Project Cost Estimate

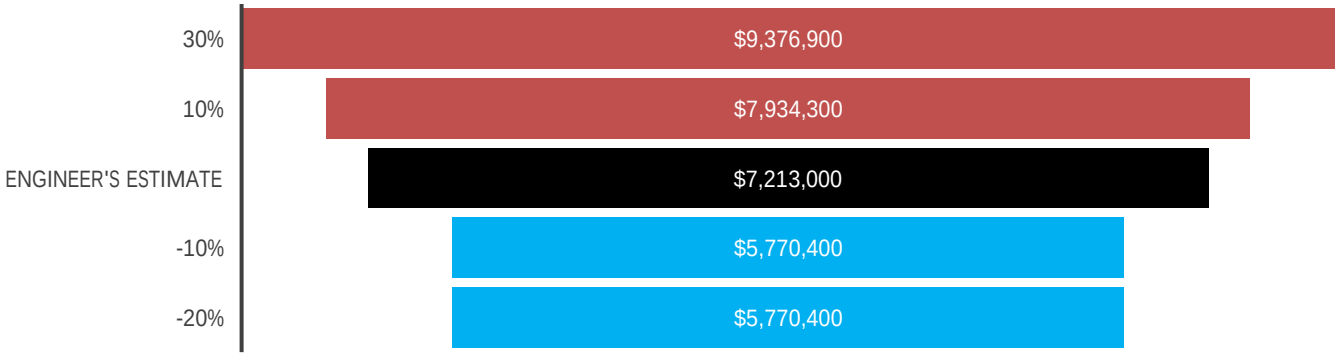

Attachments

☒ Attachment 1 – Drawings - Conceptual Site Plans for each Pump Station Alternative
☒ Attachment 2 - Engineer's Opinion of Probable Construction Cost and Probable Project Cost for each alternative
☒ Attachment 3 - 2025 Railroad Square Development Wastewater Capacity Review

Attachment 1
Drawings

ALTERNATIVE 1: NEW SUBMERSIBLE PUMP STATION

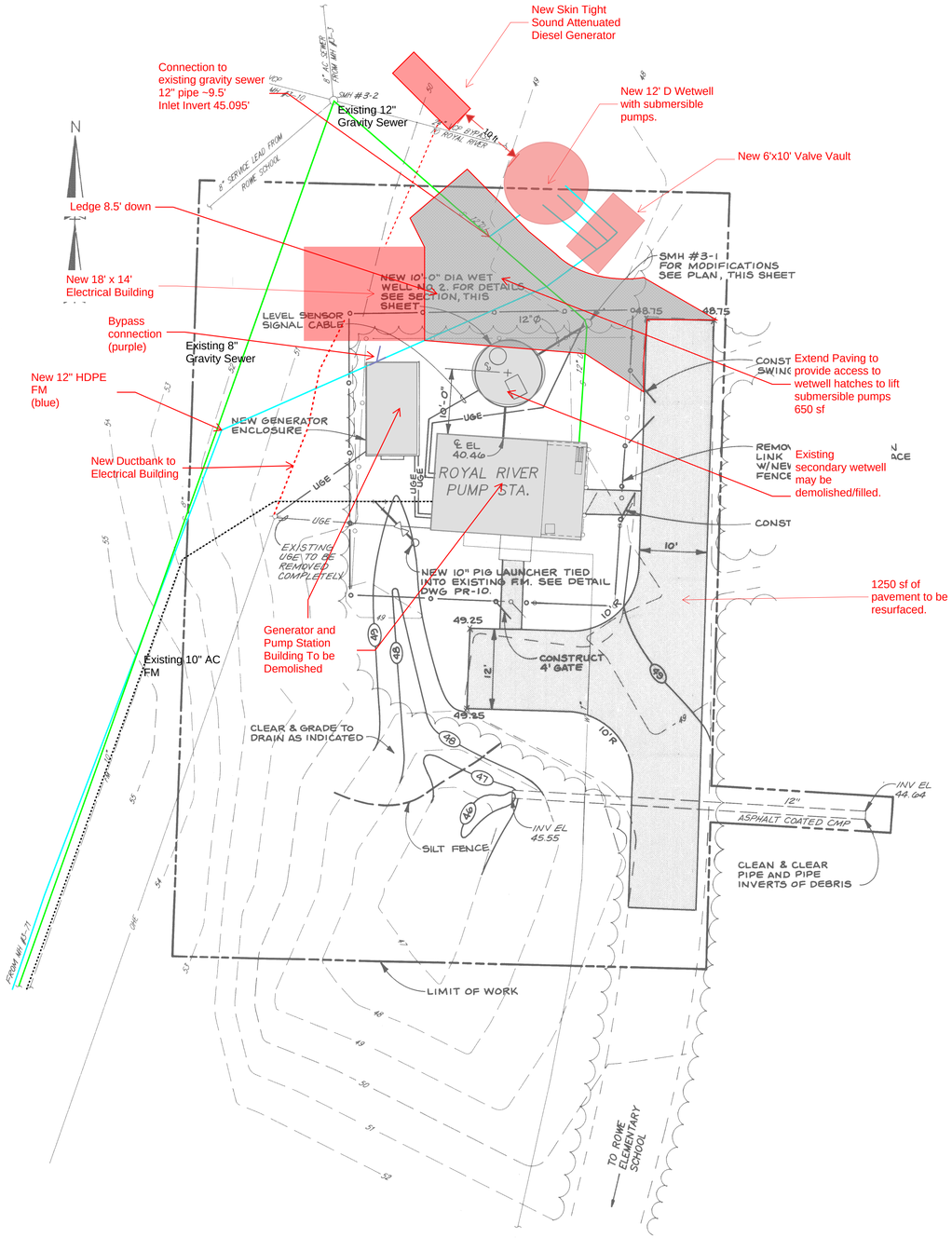

SITE PLAN

1" = 10'-0"

INDICATES NEW PAVEMENT SEE DETAIL, PR-12

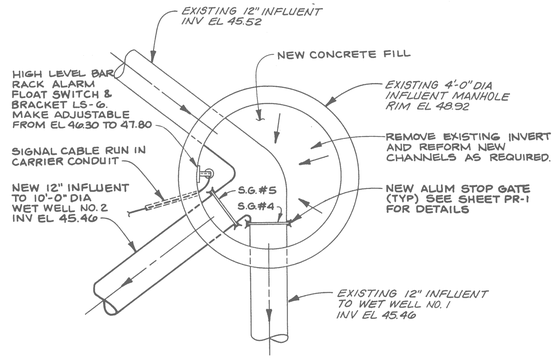

INFLUENT MANHOLE #3-1 PLAN

1/2" = 1'-0"

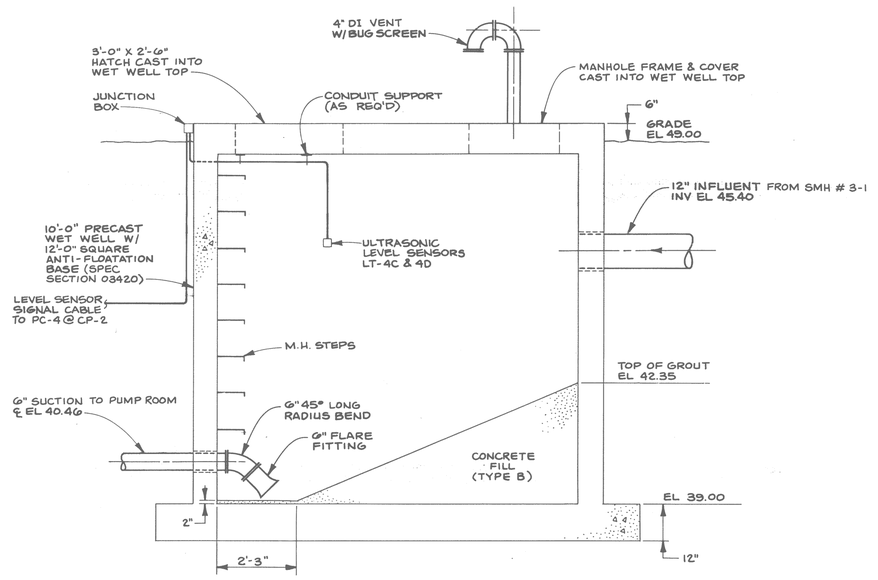

WET WELL #2 SECTION

1/2" = 1'-0"

NOTE: WET WELL LEVEL SENSING EQUIPMENT ROTATED FOR CLARITY.

3-27-91

NO	REVISIONS	APP'D	PROGRESS PRINTS
	FOR BIDDING - JULY 1991		

DRAWN BY MPR/KMD
CHECKED BY PFB/DWS/JNB
DATE 7/26/91
APPROVED BY DWS/JNB
DATE 7/26/91
BOOK NO. 1297,1298,1299
PROJECT NO. 6225L
SCALE 1" = 10'
A:\6225_#3\ROYAL.DWG

STATE OF MAINE JOHN WAYNE BRACCIO 8017 PROFESSIONAL ENGINEER

STATE OF MAINE DAVID WARREN STILES 4438 PROFESSIONAL ENGINEER

WRIGHT-PIERCE
ENGINEERS & SURVEYORS
99 Main Street Topsham, Maine 04086
TEL 207-725-8721 FAX 207-729-8414

TOWN OF YARMOUTH
WASTEWATER PUMP STATION UPGRADES
CONTRACT NO. 2

ROYAL RIVER PUMP STATION
SITE PLAN, PLAN AND SECTION

DWG. PR-5

ALTERNATIVE 2: RETROFIT EXISTING STATION TO WETWELL AND VALVE VAULT

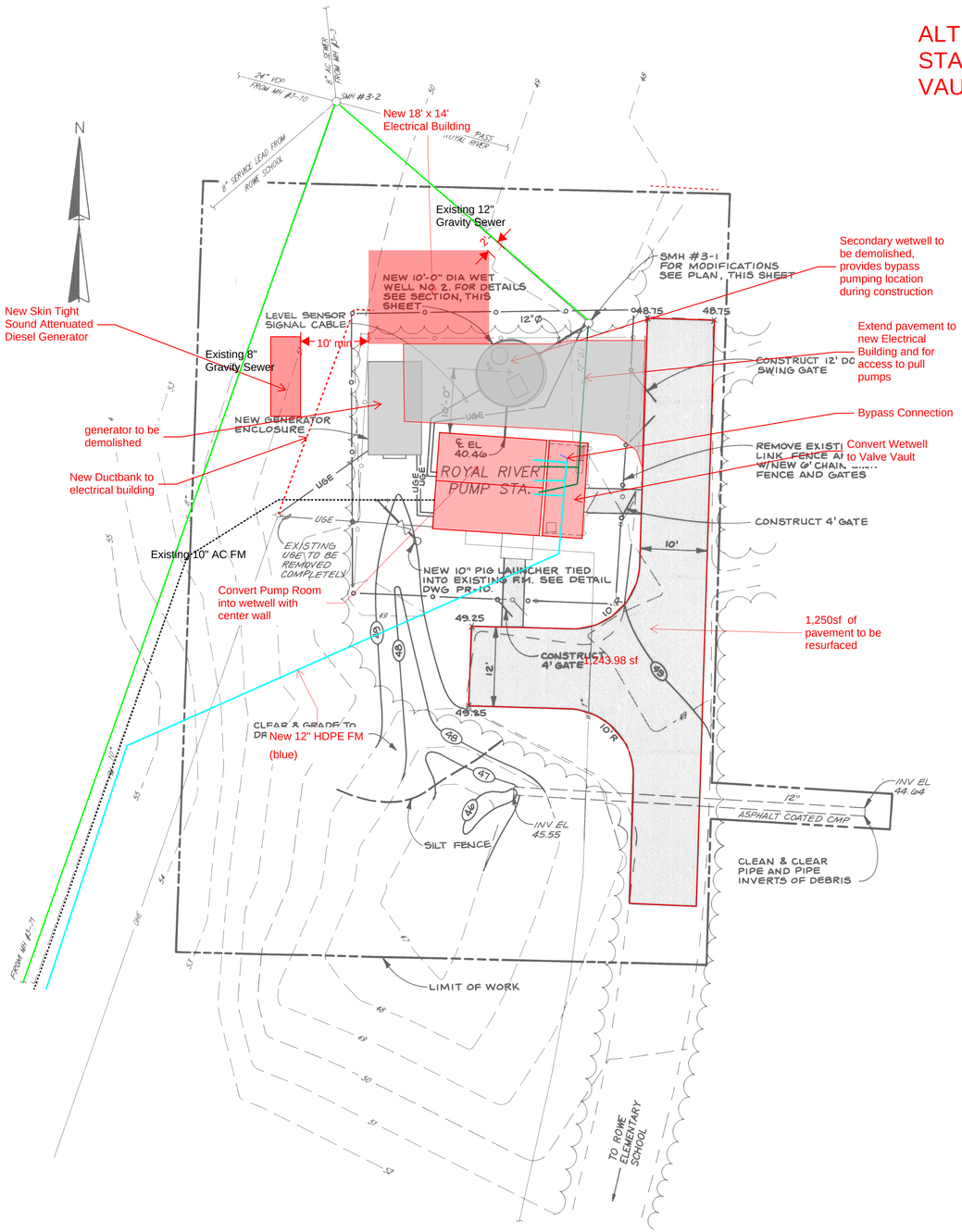

SITE PLAN

1" = 10'-0"

INDICATES NEW PAVEMENT SEE DETAIL, PR-12

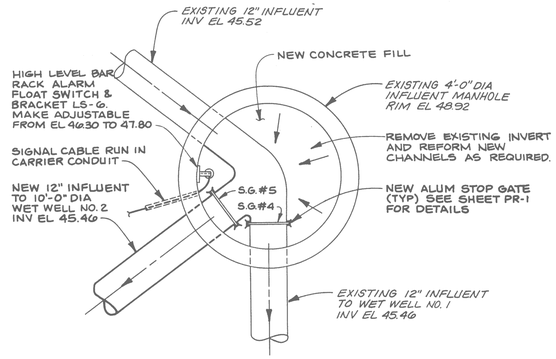

INFLUENT MANHOLE #3-1 PLAN

1/2" = 1'-0"

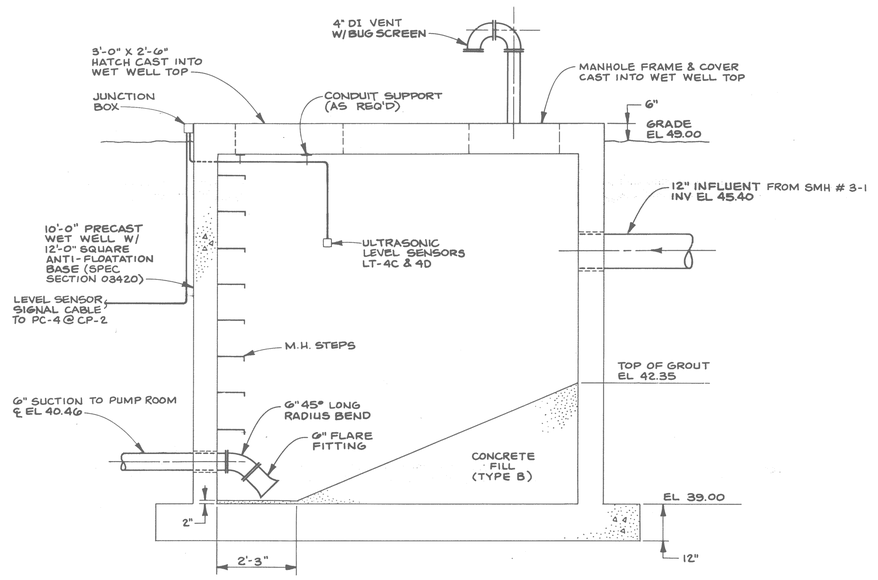

WET WELL #2 SECTION

1/2" = 1'-0"

NOTE: WET WELL LEVEL SENSING EQUIPMENT ROTATED FOR CLARITY.

3-27-91

PROGRESS PRINTS

NO	REVISIONS	APP'D
	FOR BIDDING - JULY 1991	

DRAWN BY MPR/KMD
CHECKED BY PFB/DWS/JNB
DATE 7/26/91
APPROVED BY DWS/JNB
DATE 7/26/91
BOOK NO. 1297,1298,1299
PROJECT NO. 6225L
SCALE 1" = 10'
A:\6225_#3\ROYAL.DWG

STATE OF MAINE JOHN WAYNE BRACCIO 8017 PROFESSIONAL ENGINEER

STATE OF MAINE DAVID WARREN STILES 4438 PROFESSIONAL ENGINEER

WRIGHT-PIERCE
ENGINEERS & SURVEYORS
99 Main Street Topsham, Maine 04086
TEL 207-725-8721 FAX 207-729-8414

TOWN OF YARMOUTH
WASTEWATER PUMP STATION UPGRADES
CONTRACT NO. 2

ROYAL RIVER PUMP STATION
SITE PLAN, PLAN AND SECTION

DWG. PR-5

Attachment 2
Engineer's Opinion of Probable Cost

Alternative 1 - New Submersible Station

Town of Yarmouth
Royal River PS Alt. 1 New Submersible PS
W-P PROJECT NO. 22183
AACE CLASS 3 ESTIMATE
ENR INDEX 13839, 06/2025
PROJECT COST SUMMARY

PROJECT COMPONENT		COST	COMMENTS
CONSTRUCTION		$2,270,000	Refer to Construction Summary
CONSTRUCTION CONTINGENCY	5.0%	$110,000	Allowance
TECHNICAL SERVICES	22.0%	$499,000	
MATERIALS TESTING	0.5%	$11,000	Allowance
LEGAL/ ADMINISTRATIVE	2.0%	$45,000	Allowance
SUBTOTAL		$2,935,000	
FINANCING	1.0%	$29,000	Estimated interim interest
ENGINEER'S ESTIMATE OF PROJECT COST		$2,964,000	

Notes:
1) Cost estimate is based on ENR INDEX 13839, 6/2025

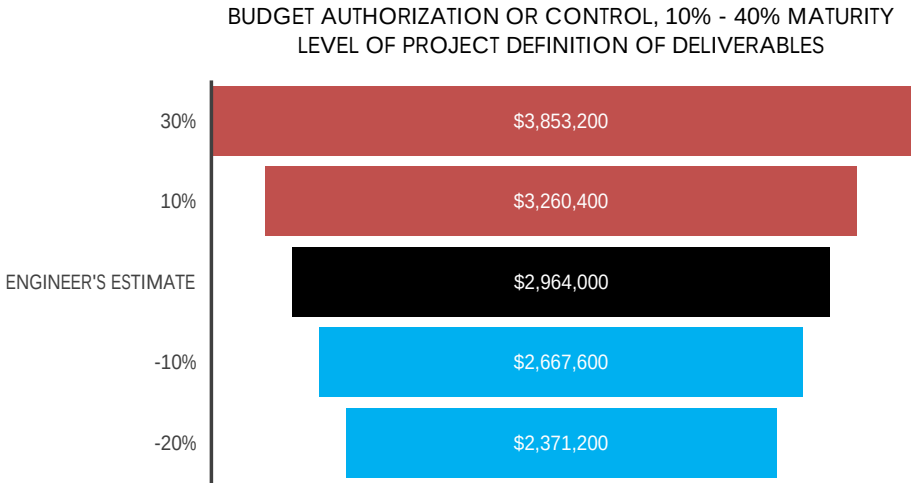

Town of Yarmouth
Royal River PS Alt. 1 New Submersible PS
W-P PROJECT NO. 22183
AACE CLASS 3 ESTIMATE
ENR INDEX 13839, 06/2025
CONSTRUCTION COST SUMMARY

DESCRIPTION	BID	ESTIMATED COST
CIVIL		
EROSION CONTROL/SITE CLEANUP/LOAM & SEED		$15,000
EXCAVATION FOR NEW STRUCTURES		$25,000
SITE WORK FOR NEW GENERATOR		$8,000
DEMOLITION OF EXISTING STATION		$25,000
DUCTBANK INSTALLATION		$8,000
PAVING		$45,000
ARCHITECTURAL		
ELECTRICAL BUILDING ARCH COST		$101,000
PROCESS EQUIPMENT AND PIPING FINISHES		$15,000
STRUCTURAL		
ELECTRICAL BUILDING STRUCTURAL COST		$25,000
STRUCTURAL GROUNDWORK/FILL FOR VAULT AND WET WELL		$20,000
FLOWABLE FILL FOR WETWELL/DRYWELL NOT NEEDED, GRAVEL USED TO FILL ST.		$10,000
HATCHES FOR WETWELL AND VALVE PIT		$30,000
12' DIA. WET WELL AND 6'x10' VALVE VAULT (PRECAST)		$160,000
PROCESS		
DEMOLITION		$18,000
PUMP STATION ALT. 1 NEW SUB PS		$397,000
HVAC/ PLUMBING		
HEAT PUMP FOR ELECTRICAL BUILDING		$18,000
INSTRUMENTATION		
INSTRUMENTATION		$72,000
ELECTRICAL		
ELECTRICAL BUILDING DISTRIBUTION AND CONTROLS		$184,000
STANDBY GENERATOR AND ATS		$100,000
VFDs		$90,000
SPECIALS		
PROCESS BY-PASS PUMPING		$20,000
SHEETING		$30,000
GROUNDWATER DEWATERING (OPEN)		$20,000
LEDGE		$23,000
PCB REMOVAL PLACEHOLDER		$50,000
GENERAL CONTRACTOR, SUBTOTAL		$558,000
GENERAL CONTRACTOR OH&P	7.5%	$42,000
SUBCONTRACTORS, SUBTOTAL		$951,000
GENERAL CONTRACTOR MARKUP	5.0%	$48,000
UNIT PRICE ITEMS	1.0%	$6,000
GENERAL CONDITIONS	10.0%	$161,000
SUBTOTAL, CONSTRUCTION COSTS		$1,766,000
PROJECT MULTIPLIER, DESIGN CONTINGENCY	20%	
PROJECT MULTIPLIER, INFLATION TO MIDPT CONST.	7%	
ENGINEERS ESTIMATE OF CONSTRUCTION COST		$2,266,000

Attachment 2
Engineer's Opinion of Probable Cost

Alternative 2 - Retrofit Existing Station

Town of Yarmouth
Royal River PS Alt. 2 Retrofit Existing PS
W-P PROJECT NO. 22183
AACE CLASS 3 ESTIMATE
ENR INDEX 13839, 06/2025
PROJECT COST SUMMARY

PROJECT COMPONENT		COST	COMMENTS
CONSTRUCTION		$2,100,000	Refer to Construction Summary
CONSTRUCTION CONTINGENCY	5.0%	$110,000	Allowance
TECHNICAL SERVICES	22.0%	$462,000	
MATERIALS TESTING	0.5%	$11,000	Allowance
LEGAL/ ADMINISTRATIVE	2.0%	$42,000	Allowance
SUBTOTAL		$2,725,000	
FINANCING	1.0%	$27,000	Estimated interim interest
ENGINEER'S ESTIMATE OF PROJECT COST		$2,752,000	

Notes:
1) Cost estimate is based on ENR INDEX 13839, 06/2025.

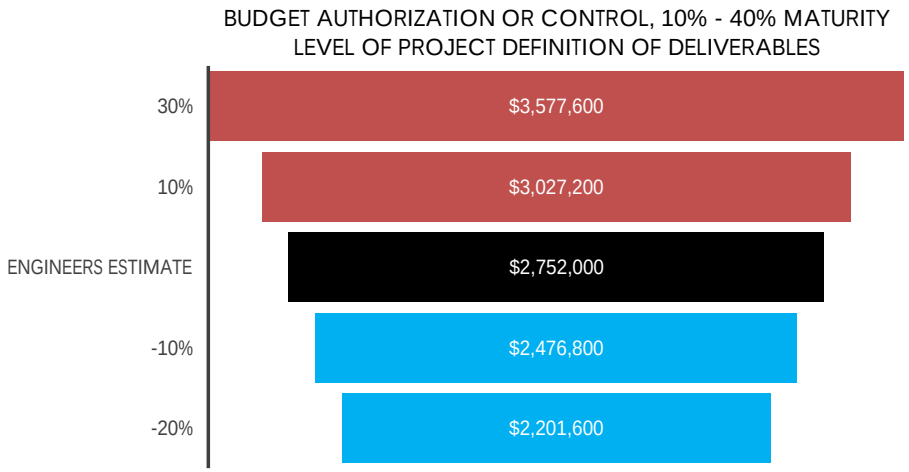

Town of Yarmouth
Royal River PS Alt. 2 Retrofit Existing PS
W-P PROJECT NO. 22183
AACE CLASS 3 ESTIMATE
ENR INDEX 13839, 06/2025
CONSTRUCTION COST SUMMARY

DESCRIPTION	BID	ESTIMATED COST
CIVIL		
EROSION CONTROL/SITE CLEANUP/LOAM & SEED		$15,000
EXCAVATION FOR NEW STRUCTURES (N/A)		$0
SITE WORK FOR NEW GENERATOR		$8,000
DEMOLITION OF EXISTING STATION		$25,000
DUCTBANK INSTALLATION		$8,000
PAVING		$25,000
ARCHITECTURAL		
ELECTRICAL BUILDING ARCH COST		$101,000
PROCESS EQUIPMENT AND PIPING FINISHES		$15,000
STRUCTURAL		
ELECTRICAL BUILDING STRUCTURAL COST		$25,000
FLOWABLE FILL TO TURN WETWELL INTO VALVE PIT		$30,000
HATCHES FOR WETWELL AND VALVE PIT		$40,000
TOP SLAB FOR RETROFITTED WETWELL AND VALVE VAULT		$17,000
MODIFICATIONS TO PUMP ROOM TO CREATE WETWELL		$22,000
PROCESS		
DEMOLITION		$18,000
PUMP STATION ALT. 2 RETROFIT		$397,000
HVAC/ PLUMBING		
HEAT PUMP FOR ELECTRICAL BUILDING		$18,000
INSTRUMENTATION		
INSTRUMENTATION		$72,000
ELECTRICAL		
ELECTRICAL BUILDING DISTRIBUTION AND CONTROLS		$184,000
STANDBY GENERATOR AND ATS		$100,000
VFDs		$90,000
SPECIALS		
PROCESS BY-PASS PUMPING		$110,000
SHEETING		$0
GROUNDWATER DEWATERING (OPEN)		$5,000
PCB REMOVAL PLACEHOLDER		$50,000
GENERAL CONTRACTOR, SUBTOTAL		$580,000
GENERAL CONTRACTOR OH&P	7.5%	$44,000
SUBCONTRACTORS, SUBTOTAL		$795,000
GENERAL CONTRACTOR MARKUP	5.0%	$40,000
UNIT PRICE ITEMS	1.0%	$6,000
GENERAL CONDITIONS	10.0%	$147,000
SUBTOTAL, CONSTRUCTION COSTS		$1,612,000
PROJECT MULTIPLIER, DESIGN CONTINGENCY	22%	
PROJECT MULTIPLIER, INFLATION TO MIDPT CONST.	7%	
ENGINEERS ESTIMATE OF CONSTRUCTION COST		$2,103,000

Attachment 2
Engineer's Opinion of Probable Cost

Horizontal Costs (Force Main Options and Gravity Sewer)

Town of Yarmouth
Royal River Pump Station Horizontal Alternatives
W-P PROJECT NO. 22183
ENR INDEX 13839, 06/2025
CONSTRUCTION COST SUMMARY
HORIZONTAL ALTERNATIVES SUMMARY

		1 FM			2 FMs			1 FM, relining existing FM		
		Alt 1			**Alt 2**			**Alt 3**		
DESCRIPTION	**UNITS**	**UNIT PRICE**	**UNIT TOTAL**	**TOTAL COST**	**UNIT PRICE**	**UNIT TOTAL**	**TOTAL COST**	**UNIT PRICE**	**UNIT TOTAL**	**TOTAL COST**
Mobilization/Demobilization	**LS**	$ 20,000	1	**$20,000**	$ 30,000	1	**$30,000**	$ 40,000	1	**$40,000**
12" HDPE FM Sec. 1	**LF**	$ 350	300	**$105,000**	$ 263	600	**$157,500**	$ 350	300	**$105,000**
12" HDPE FM Sec. 2	**LF**	$ 400	820	**$328,000**	$ 300	1,640	**$492,000**	$ 400	820	**$328,000**
12" HDPE FM Sec 3.	**LF**	$ 600	1,030	**$618,000**	$ 600	2,060	**$1,236,000**	$ 600	1,030	**$618,000**
10" AC FM Relining	**LF**	$ 200	0	**$0**	$ 200	0	**$0**	$ 228	2,150	**$489,500**
Test Pits (For Utility Crossings)	**EA**	$ 2,000	5	**$10,000**	$ 2,000	5	**$10,000**	$ 2,000	5	**$10,000**
12" HDPE HDD	**LF**	$ -	0	**$0**	$0	0	**$0**	$0	0	**$0**
Connection to Existing FM	**LS**	$ 5,000	1	**$5,000**	$0	0	**$0**	$5,000	1	**$5,000**
Construction - Subtotal				$1,086,000			$1,926,000			$1,596,000
Project Multiplier - Design Contingency		20%		$217,200			$385,200			$319,200
Project Multiplier - Inflation to MidPoint		7%		$75,160			$133,295			$110,457
Construction Bid Price - Total				$1,379,000			$2,445,000			$2,026,000
CONSTRUCTION				$1,379,000			$2,445,000			$2,026,000
CONSTRUCTION CONTINGENCY	5.0%			$69,000			$122,000			$101,000
TECHNICAL SERVICES	12.0%			$165,000			$230,000			$194,000
MATERIALS TESTING	2.5%			$34,000			$50,000			$34,000
LEGAL/ ADMINISTRATIVE	2.0%			$28,000			$28,000			$28,000
SUBTOTAL				$1,675,000			$2,875,000			$2,383,000
FINANCING	1.0%			$17,000			$29,000			$24,000
ENGINEER'S ESTIMATE OF PROJECT COST				$1,692,000			$2,904,000			$2,407,000

Attachment 3
Railroad Square Development
Wastewater Capacity Review

WRIGHT-PIERCE
Engineering a Better Environment

Memorandum

Date: 3/19/2025

Project No.: 22005

To: Town of Yarmouth, ME

From: Brody Campbell, PE; Matthew Burns, PE – Wright-Pierce

Subject: Railroad Square Development Wastewater Capacity Review

Background

Railroad Square of Yarmouth LLC has proposed the construction of 6 new buildings at Railroad Square in Yarmouth. These buildings will include 99 new residential units (mix of studio, 1 bedroom and 2 bedroom units) plus approximately 7,000 square feet of commercial/retail space. Wastewater generated from this development is proposed to connect to the existing sewer located in Main Street. It will flow by gravity to the Royal River Pump Station, where it will be pumped to the force main terminus located further east on Main Street. The Town of Yarmouth hired Wright-Pierce to evaluate the impacts of the proposed Railroad Square development on the Town's sewer collection system. Specifically, whether the affected gravity sewer and Royal River Pump Station can handle the increased flow expected from the development, and if not, what options exist to increase capacity to meet demand.

Proposed Flows

Railroad Square provided water and wastewater flow estimates based on the proposed development described above and included the estimates in their site plan application form. Refer to Appendix A for the design flows summary table from the site plan application form. The estimate notes an average flow of 19,200 gpd and a peak flow of 54 gpm, however, this does not assume any inflow or infiltration into the gravity sewer, which is unrealistic. For the purposes of this evaluation, an average flow of 21,600 gallons per day (gpd) and a peak design flow of 60 gpm was used. These estimates are based on the State of Maine Subsurface Disposal Rules, which assume wastewater is generated at 180 gpd per 1 or 2 bedroom units, 270 gpd per 3 bedroom unit, and 12 gpd per employee in commercial/retail spaces.

Existing Pump Station, Force Main, and Sewer Information

The Royal River Pump Station, discharge force main, and influent gravity sewers were installed in the 1960s. Influent sewer to the station includes three separate gravity interceptors that converge in a manhole upstream of the station (SMH-03-02).

A spreadsheet analysis of the influent gravity sewer to the pump station was completed to determine the capacity of the gravity sewer. The analysis established capacity of the existing sewer lines flowing full (i.e. no surcharging). GIS and record drawing information were reviewed to determine the length, size, and slope of gravity sewer between the pump station and proposed development location. For the purposes of this analysis, it was assumed that the development sewer would connect at SMH-03-13A and flow by gravity to the pump station. Refer to Figure 1 showing the extents of the gravity sewer capacity analysis. This section of sewer includes approximately 1,200 linear feet of 24-inch pipe and a 250 linear foot section of 12-inch pipe between SMH-03-10B to SMH-03-02. Invert information for some manholes in this area were not available, so those pipe sections were assumed to be installed

at minimum acceptable slope per industry standards, Technical Report # 16 Guides for the Design of Wastewater Treatment Works by NEIWPCC (TR-16).

This leads to a conservative estimate of capacity. The spreadsheet analysis uses Manning's equation, which assumes open-channel, non-surcharged flow. The limiting pipe capacity in the sewer that would convey flow from the Railroad Square development is approximately 3.59 million gallons per day (MGD) or 2,500 gpm.

Figure 1 Influent Gravity Sewer Upstream of Royal River Pump Station



The existing station includes a two pump system with lead, lag controls. Each pump is a Pentair (formerly Fairbanks Morse) extended shaft, 6-inch diameter, centrifugal pump (Model B5414). The design point for each pump individually is 1400-gpm at 107-feet total dynamic head (TDH). Based on pump curve information from the vendor

and the nameplate data on the pumps, the design operating point for both pumps operating at the same time is unknown and cannot be compared to the drawdown testing results.

The effluent force main is a 10-inch diameter asbestos cement pipe that extends almost 2,100 linear feet before discharging to the gravity sewer in Main Street west of the York Street intersection. A pump station upgrade was completed by the Town in 1991 that included site improvements, a standby power generator, and process improvements including pumps and piping. The station currently consists of two wet wells (wet well #2 is only used when wet well #1 is offline for cleanings bi-yearly), an influent screening channel and manual bar rack, subgrade pump room, and an above grade building that houses the pumps, electrical, and controls for the station. The impeller in pump 2 was replaced in 2023.

Methodology

The following methodology was used to determine if adequate capacity exists in the sewer system to handle the proposed flow increase:

1. Flow meter data was compared to the gravity sewer capacity to determine if any surcharging of the influent sewer would occur based on the recorded storm events and rain data. Then the additional flows from the proposed development and Rowe School were added to confirm there are no capacity limitations with the influent sewer.
2. Flow meter data to the pump station was then compared to the drawdown test results at the pump station. This was evaluated to determine if the pump station could handle the measured flows during the rain events measured. Then the additional flows from the proposed development and Rowe School were added to confirm there are no capacity limitations with the pump station.
    a. One pump and two pump scenarios were evaluated to determine if the station could handle the measured flow and proposed development.

Drawdown tests were completed by the Town on 1/14/25 and 1/31/25 to verify the pump operating point(s). Data from the 1/14/25 A summary of those results are included below. The table shows the average flow and discharge pressure from three drawdown test for each condition. Drawdown testing results on 1/14/25 are suspected to be inaccurate due to pump speed ramp up time on the VFD and surcharging of influent sewer and are not included in Table 1.

Table 1 Royal River Pump Station Drawdown Results

Drawdown Summary	Pump 1		Pump 2		Pumps 1 and 2 Combined	
Date	Flow (gpm)	Discharge Pressure (psi)	Flow (gpm)	Discharge Pressure (psi)	Flow (gpm)	Discharge Pressure (psi)
1/31/25	998	28	1,384	40	1,593	44

The discharge pressure of the pumps ranged from 28 to 44 psi (65 to 102 ft; note 1 psi = 2.31 ft). The pump nameplate ratings are 107 feet TDH (46.3 psi).

Drawdown test results indicate that Pump 1 flow is 71% of the nameplate capacity. Pump 2 flow is 99% of the nameplate capacity. Pump 2 had the impeller replaced in 2023, while Pump 1 still has original parts from the 1991 upgrade. One can expect there to be a reduction in flow as pump parts wear and efficiency is reduced.

The drawdown results on 1/31/25 are believed to be accurate for the purposes of this evaluation. The pump curve and operating points for each pump are shown in Figure 2. The pump 1 operating point is shown in blue, the pump 2 operating point is shown in green, and the nameplate operating point for both pumps is shown in red. Both pump operating points are shifted right of the best efficiency point on the curve, which indicates a reduced pump capacity from the design point. This can be caused by wear to the pumps, debris build up in the force main, or a variety of other reasons.

Figure 2 Royal River Pump Station Pump Curve Results

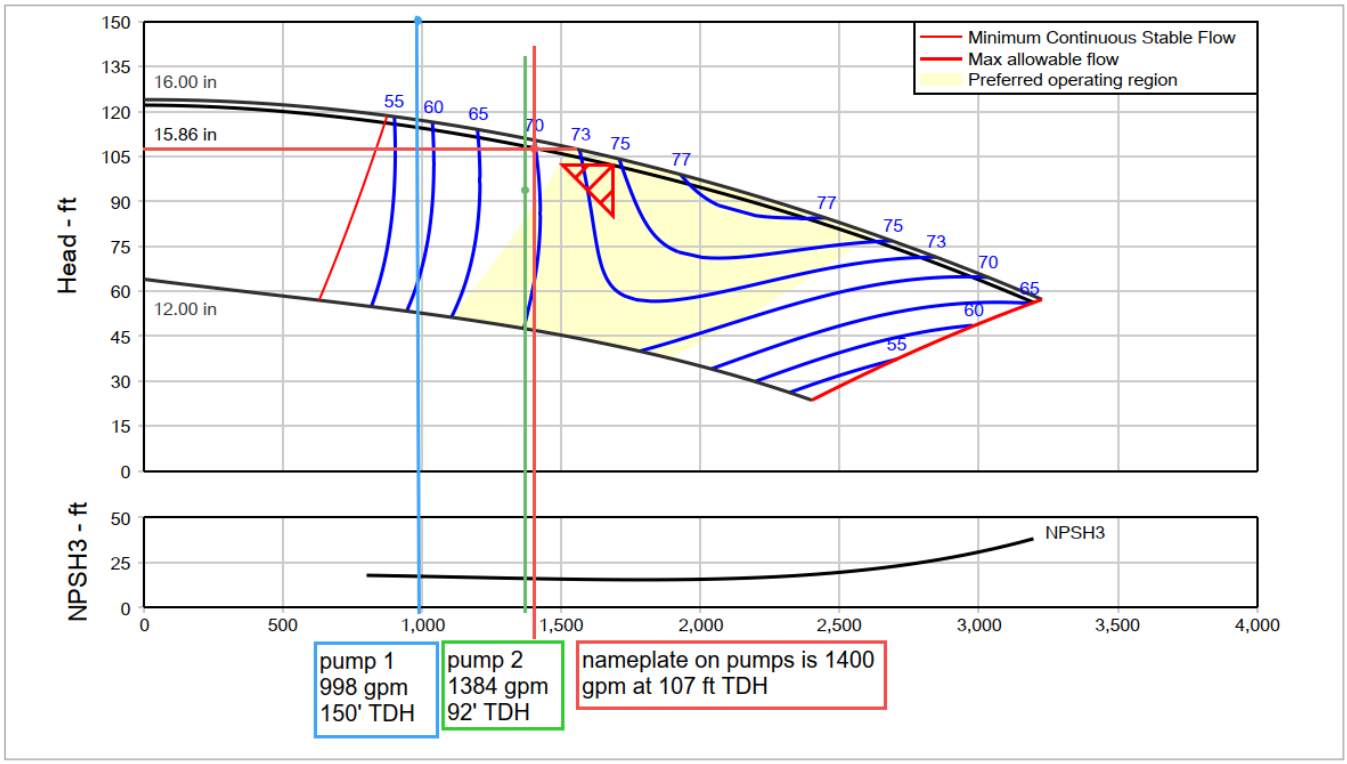

A model of the system curve for the pump station and force main was completed to compare with the pump drawdown results. The C-factor (roughness coefficient) was adjusted until the system curve intersected the Pump 2 recorded discharge pressure of 40 psi (92 feet discharge head). This resulted in a C-factor of 103. Typical C-factors for asbestos cement pipe range from 140 to 90 and decrease with age due to degradation of the pipe.

Flow Metering Program and Results

The flow metering program included the installation and maintenance of three Hach FL900 area-velocity flow meters over the course of a 5-week monitoring period from December 4, 2024, through January 8, 2025. During this period, wastewater flow data was documented at 15-minute intervals and reviewed for general trends and anomalies. A rain gauge was installed on the Royal River Pump Station to collect precipitation rates and totals. Data

after December 31st was removed from the study period since a rag ball dislodged the flow meter in SMH-03-10B causing inaccurate readings. Otherwise, the data from all three meters was of good quality.

The average flow to the station from December 4th to December 31st was 361 gpm, the 100% peak flow was 1,590 gpm, and the 99.9% peak flow was 1,494 gpm, which corresponded to a rain event on December 11th that had a 1-year 24-hour recurrence interval. The flow meters installed measured all flow to the Royal River Pump Station except for the flow from Rowe School. That flow is included and summarized in the Capacity Analysis Section. Refer to Appendix B for the flow metering summary memorandum.

Capacity Analysis

The flow metering results were evaluated against the pump drawdown data and gravity sewer analysis to determine the pump station's ability to handle the metered flow and future development flow. The peak flow event of the study period occurred on December 11th due to a 2.4 -inch rainstorm, which was equivalent to a 1-year, 24-hour storm interval event. Inflow and infiltration (I/I) into the system increased the 99.9% peak flow metered to 1,494 gpm.

As noted previously, the drawdown results indicated the capacity of one pump running as 998 gpm for Pump 1 and 1,384 gpm for Pump 2. There was a four-hour period on December 11th where the metered flow to the pump station exceeded the capacity of both Pumps 1 and Pump 2 operating individually. The wet well storage volume is limited to approximately 540 gallons per foot. The lead pump on elevation is 3.75-feet and the lag pump on elevation is 5.50-feet. The total operating volume between lead on and lag on is 945 gallons. Approximately 9,900 gallons of metered flow in excess of the Pump 2 capacity was recorded during that four-hour period. Theoretically the flow should have overwhelmed one pump operating and caused the lag pump to turn on, but the Town's SCADA data indicated only one pump was running during this period, and no sanitary sewer overflows were observed.

While the analysis shows that the station is at or under capacity for the 1-year storm captured during flow monitoring, the Town must consider the impacts during larger storm events. Larger storm events (e.g. a 5-, 10-, 25-, 50-, or 100-year storm) would theoretically result in more flow to the station, potentially overwhelming it. Snow melt could also cause additional flow to the station. This is without considering the additional flow from the Rowe School or proposed flow from the Railroad Square Development. It is important to note that the pump station recently experienced a sanitary sewer overflow (SSO) during the January 2024 storm, which included approximately 14-inches of snow followed by 2-inches of rain.

The Rowe School flow was not measured by the flow meters installed during the study period. School flows vary considerably when classes are in session vs. off hours or weekends and holidays. There are 190 students and 16 faculty members at the school according to school district records. Based on the State of Maine Subsurface Disposal Rules, the average daily flow from the school is estimated to be 4,200 gpd. This assumes 21 gpd is generated per student and 12 gpd is generated per faculty member. Realistically, the vast majority of that flow would be generated during school hours (8am to 3pm). Assuming a peaking factor of six per TR-16, which is the guideline the Maine Department of Environmental Protection follows, the peak flow generated by the school would be approximately 60 gpm from the hours of 8am to 3pm.

The peak flow during the rain event on December 11th was recorded during the overnight hours when the school flows would have been minimal. However, that does not prevent the next storm from occurring during school

hours. Therefore, the estimated peak flow to the station during a 1-year storm interval event with similar intensity to the December 11th storm with school in session is approximately 1,554 gpm.

The proposed flows to the station from the Railroad Square Development is an additional 60 gpm, as noted in Appendix A. Therefore, the future peak flow to the station during a 1-year storm event of similar intensity to the December 11th storm could exceed 1,614 gpm. Flows could be higher during a larger storm event or storm event for higher intensity. The gravity sewer to the station should adequately handle this flow without surcharging the system since the capacity is estimated to be at least 2,500 gpm. Based on the pump drawdown data, the station would not be able to handle the proposed peak flows even with two pumps operating (1,593 gpm).

In addition to evaluating the pump station, Wright-Pierce also analyzed the Royal River Pump Station force main for capacity. A typical recommended flow velocity in a wastewater force main is 2.5 to 6.5 ft/s. The low end velocity is intended to prevent solids deposition in the pipe and the high end velocity is intended to prevent excess head loss in the system as velocities and friction losses increase. The existing 10-inch diameter force main has an approximate capacity of 1,600 gpm at a flow velocity of 6.5 ft/s. Increasing the flow velocity above 6.5 ft/s is feasible but increases the head condition and may require larger pumps to overcome the increased friction. Increasing the velocity would result in an increase in system pressure, which is not preferred in a force main that is 60 years old as it would increase the chances of force main pipe failure.

Alternatives Evaluation

Based on discussion with the Town, the following alternatives to increase the capacity of the Royal River Pump Station were evaluated to handle the additional flows from the Railroad Square Development.

1. Replace the impeller in Pump 1
    - The Town replaced the impeller in Pump 2 in 2023, which can be seen in the drawdown tests above. Replacing the original worn impeller in Pump 1 would likely increase the capacity of Pump 1 (998 gpm) to a similar level as Pump 2 (1,384 gpm). This would also increase the overall pumping capacity of the station with both pumps operating. A quote from Pentair (formerly Fairbanks Morse) was received and the impeller material cost is $10,200. A 25% installation factor is assumed, so the overall cost of this alternative is estimated as $13,000.
    - This alternative likely increases the capacity of pump 1 to a similar level as pump 2 (1,384 gpm) and would not provide sufficient capacity to handle increased flows from the Railroad Square Development with one pump operating, which is the preferred design condition to provide redundancy should a pump be offline.

2. Rebuild Pump 1 and Pump 2
    - Rebuilding both pumps would increase the capacity and longevity of both pumps. The scope of work would include replacing the body, motor, seals, washers, capscrews, and wear rings for both pumps and the impeller for Pump 1. It is assumed that Pump 2 would not need an impeller since it was recently replaced. The pumps were installed in 1991 and a typical wastewater pump with routine maintenance can have a useful life of 20 or 30 years before rebuilding or replacement is necessary. Pentair (formerly Fairbanks Morse) quoted $30,700 to rebuild both pumps with the parts noted above. A 35% installation factor is assumed, so the overall cost of this alternative is estimated as $42,000. The pumps could be rebuilt one at a time to avoid the need to bypass pump the station. It is recommended Pump 1 is rebuilt first since it has a lower flow output currently. Considerations would have to be given for high flow management if one pump

is offline and a major storm event occurs which increases flow to the station above the capacity of only one pump.
- This alternative would likely increase the capacity of both pumps to the name plate rating (1,400 gpm) and would not provide sufficient capacity to handle increased flows from the Railroad Square Development with one pump operating.

3. Pig the force main to clean pipe and increase capacity
   - The 10-inch diameter 2,100 foot asbestos cement force main has never been cleaned or pigged since it was installed in 1965 according to discussions with the Town. Pigging the force main would help remove any settled debris from the pipe. This would increase the internal diameter of the pipe and in turn lower the total head the pumps must pump against. Lowering the head would shift the pump operating point to the right on the pump curve and increase the flow from the pumps. The overall impact on the pumping rates from pigging is unknown and would depend on the severity of the debris built up in the pipe currently. One potential outcome is assuming that pigging changes the C-factor of the pipe from 103 to 120, the output of pump 2 operating should increase from 1,384 gpm to 1,550 gpm. Vortex Services was contacted to provide a quote to pig the 2,100 foot force main. The quoted price to complete the pigging was $30,000. This does not include any cost if the pig gets stuck. The Town would be responsible for excavating the force main where the pig is stuck, cutting the pipe, removing the pig, and repairing the force main.
   - This alternative would likely increase the capacity of pump 2 to 1,550 gpm and would not provide sufficient capacity to handle increased flows from the Railroad Square Development (1,614 gpm) with one pump operating.

4. Replace Pump 1 and Pump 2 with larger pumps
   - Pentair (formerly Fairbanks Morse) was contacted to request pricing on larger pumps. Assuming the existing force main was still in place, two 1,800 gpm 147-ft TDH pumps (125 HP) would cost $225,000. Electrical modifications to the station may also be needed to accommodate the higher horsepower pumps. $300,000 was assumed for new VFDs, new electrical service and distribution gear, new larger piping, bypass pumping for installation of the new pumps, and controls integration. Also, a 25% installation factor is assumed, so the overall cost of this alternative is estimated as $735,000. At 1,800 gpm a single pump could handle the proposed 1-year storm 99.9% peak flow (1,614 gpm) with some room for additional growth or higher storm flows. The force main velocity at 1,800 gpm is 7.35 ft/s. This is above the recommended range but could still be utilized if the force main was in adequate condition.
   - This alternative would provide sufficient capacity (1,800 gpm for each pump) to handle increased flows from the Railroad Square Development (1,614 gpm).

5. Replace and upsize force main
   - Consideration could also be given to replacing and upsizing the 10-inch diameter force main. The Town has indicated that this force main is likely going to be replaced in the next 5 to 10 years as part of a CIP project. Condition assessment of the pipe could be completed to verify the remaining useful life. If the pipe was determined to be in poor shape, leading to increased friction factor and decreased capacity, it could be replaced with a larger inside diameter HDPE or ductile iron force main. This would increase capacity and allow the flow velocity and pump TDH to be reduced, resulting in smaller horsepower pumps and lower long-term electrical costs. A high-level cost was developed for this alternative assuming an average cost of $500 per linear foot of new force main, which results in a construction cost of approximately $1,050,000. No subsurface explorations have been completed as part of this cost estimate, so the presence of ledge or

unexpected underground utilities could increase this cost. This estimate is to understand magnitude of cost and for comparison of alternatives.

- This alternative could provide sufficient capacity to handle increased flows from the Railroad Square Development in conjunction with larger pumping capacity.

Conclusion and Next Steps

Based on discussions with the Town, they have decided to move forward with a phased approach to alleviate some of the station's capacity concerns. For the short-term, the Town intends to implement Alternative 2 (estimated total project cost $42,000), which will increase the capacity of both pumps to the name plate rating (1,400 gpm). This provides an increase in station capacity but is not a viable long-term solution to address peak flow events from larger storms and continued development in the area.

For the long-term, the Town intends to complete a comprehensive upgrade of the station. The station size will be increased based on growth and future flow expectations for the service area and the discharge force main will be upsized accordingly. The Town's preference is to upgrade the station into a submersible type station and the existing station would be demolished. Details for the future upgrade, including an alternative evaluation and a total project cost, will be determined during a separate, future design.

Appendices

A. Railroad Square Estimated Water/Wastewater Design Flows
B. Flow Metering Summary Memo

Appendix A
Railroad Square Estimated Water/Wastewater Design Flows

TABLE 1: RAILROAD SQUARE, YARMOUTH MIXED USE DEVELOPMENT

Railroad Square, Yarmouth

Estimated Water/Wastewater Design Flows

			Date/Rev:	**5/23/2024**
Type of Use	**Unit**	**# Units**	**Flow Basis (GPD)**	**Average Daily Design Flows (GPD)**
BLDG-1 32-2 Bedroom Units	Bedroom	32	180	5760
BLDG-2 16-2 Bedroom Units	Bedroom	16	180	2880
BLDG-3 12-1 Bedroom Units / 12-2 Bedroom Units	Bedroom	24	180	4320
BLDG-4 6-3 Bedroom Units	Bedroom	6	270	1620
BLDG-5 6-1 Bedroom Units / 2 Studio Units	Bedroom	8	180	1440
BLDG-6 11-1 Bedroom Units / 2-2 Bedroom Units	Bedroom	13	180	2340
BLDG 5 Commercial/Retail -(3170 sf assumed)	Per Employee	32	12	384
BLDG 6 Commercial/Retail -(3829 sf assumed)	Per Employee	38	12	456
		Total Design Flows (GPD)		19,200
Peak Flow Estimate (Gallons per Minute (GPM))(3.), (4.)				54
Add Irrigation Estimate (water usage not wastewater) SEASONAL	Entire Site	1	4000	4,000
Total Estimated Daily Water Usage (GPD)				23,200

Notes:

1. Ref: Maine Subsurface Wastewater Disposal Rules (10-144 Chapter 241), Table 4A (180 gpd for up to 2 bedroom dwellings)

2. Ref : Maine Subsurface Wastewater Disposal Rules Table 4C. Emplyees estimated per 24 hour period -retail use.

3. Peak hourly flows -=(ave daily flow/24 hour per day/60 miin. per hour) x (Assume peaking factor 4.0)

4. Fixture Counts to be provided to YWD for actual meter sizing for each lot/building

Appendix B
Flow Metering Summary Memo

Date: **1/28/2025**

Project No.: **22005**

To: **Town of Yarmouth, ME**

From: **Wright-Pierce**

Subject: **Railroad Square Development – Flow Metering Summary**

Introduction

Collection System Background

Railroad Square of Yarmouth LLC has proposed the construction of 6 new buildings at Railroad Square in Yarmouth, Maine. These buildings will include 99 new residential units (mix of studio, 1 bedroom and 2 bedroom units) plus approximately 7,000 square feet of commercial/retail space. Wastewater generated from this development is proposed to connect to existing sewer located in Main Street, flow by gravity to the Royal River Pump Station where it will be pumped to the force main terminus located further east on Main Street. The Town is concerned about the ability of existing gravity sewer and the pump station to handle the approximate 55 to 60 gallons per minute (gpm) of peak flow from this development and would like to evaluate the gravity sewer and pump station capacity, and options for increasing capacity if needed.

Purpose

The Town hired Wright-Pierce to monitor flow from 3 drainage areas that contribute flow to the Royal River pump station and determine if there is capacity within the collection system for newly proposed developments.

Flow and Rainfall Monitoring Program

Flow Monitoring Program

The flow metering program included the installation and maintenance of three Hach FL900 area velocity flow meters over the course of a 5-week monitoring period from December 4, 2024, through January 8, 2025. During this period, wastewater flow data was recorded at 15-minute intervals and reviewed for general trends and anomalies.

Wright-Pierce field technicians installed and maintained the meters. Site visits were conducted as needed to address data issues or equipment issues noted during data review. Manual depth and velocity measurements were taken periodically at site visits to check and calibrate the meters. Data for the meters was collected and automatically uploaded to FS Data, a Hach data viewing portal. Wright-Pierce routinely reviewed the flow metering data to monitor proper data collection. Any issues were identified by Wright-Pierce and addressed in the field. At the end of the flow monitoring period, Wright-Pierce conducted a review of the data collected and made necessary data edits before completing a capacity assessment.

A large rag ball was discovered in SMH-03-10B during removal of the flow meter. The rag ball dislodged the sensor from its place at the bottom of the inlet pipe around 12/31/2024. The final week of flow meter data for this meter was excluded from the analysis due to the rag ball. The rag ball was cleared when the flow meter equipment was removed from the manhole. Data recorded in SMH-03-10B prior to the rag ball was of good quality.

The data recorded was of good quality with no major gaps or deviations in data for SMH-03-03 and SMH-03-71. Data at SMH-03-03 shows the influence of the upstream Park Street Pump Station turning on/off.

All 3 flow meter locations are shown in Figure 1 and the pipe diameters are summarized in Table 1.

Figure 1 Flow Meter Installation Locations

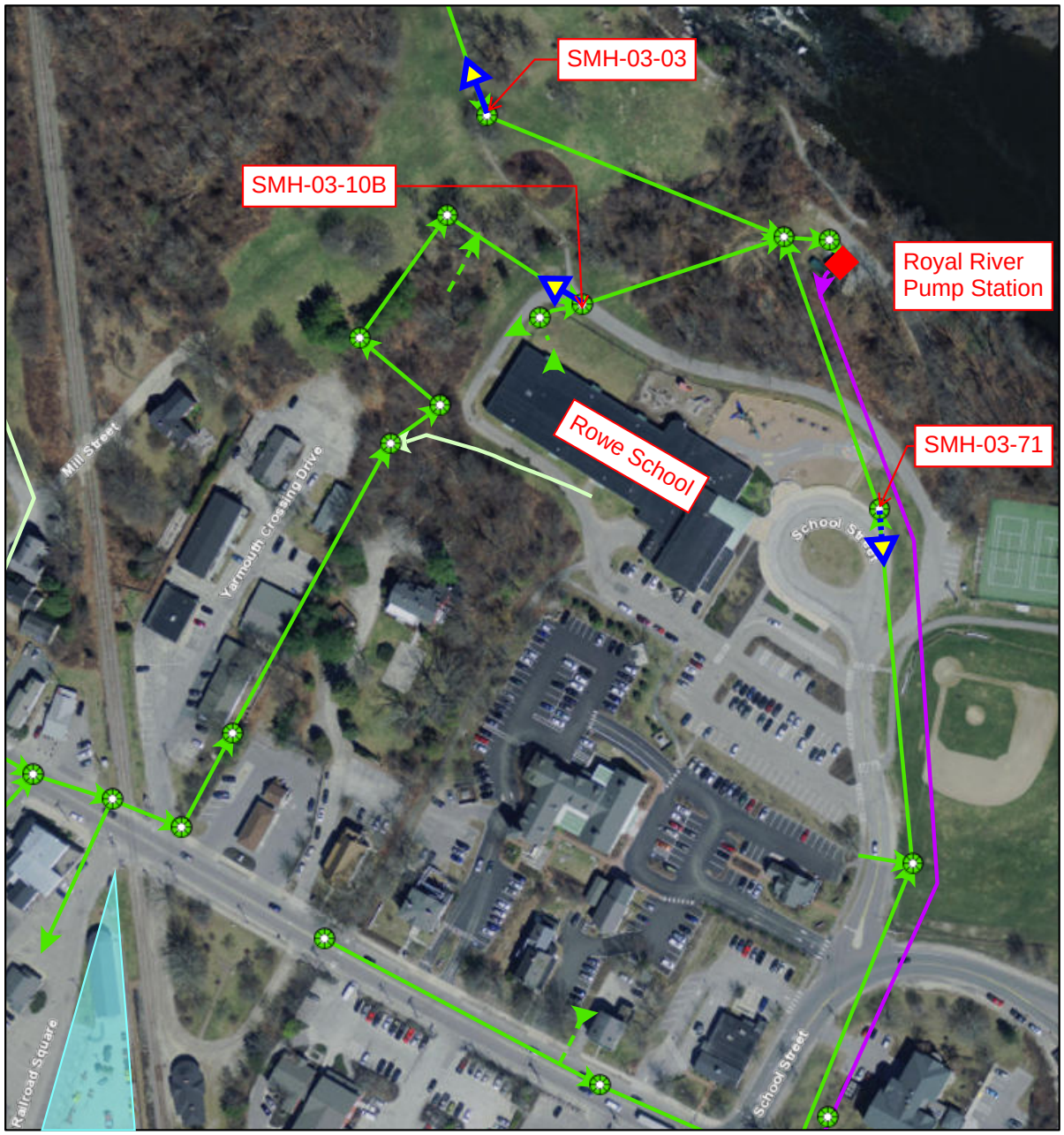

11/12/2024, 10:04:44 AM

1:2,680

0 0.01 0.03 0.06 mi

0 0.03 0.05 0.1 km

Sewer Manholes

Manhole

Sewer Pipes

Force Main

Gravity

Lateral

Low Pressure

Flow Meter Installation Location

Town of Yarmouth

Water Pollution Control
Town of Yarmouth

Table 1 Summary of Yarmouth Flow Monitoring Locations

Manhole ID	Metered Pipe Diameter[1] (in)
SMH-03-03	8
SMH-03-10B	24
SMH-03-71	8

Note:

1. Diameter is the average of the pipe width and height measured at meter installation.

Table 2 provides overall flow results at each of the meter locations. Peaking factor was used to determine the extent of rainfall response within each flowmeter basin. The peaking factor was calculated using the average daily flow and the peak flow rate of each basin. Figure 2, Figure 3, and Figure 4 depict flow and precipitation data at each meter location.

Table 2 Summary of Flow Meter Data

Manhole ID	Average Daily Flow (MGD)	Peak Flow Rate (MGD)[1]	Peaking Factor
SMH-03-03	0.24	0.90	3.71
SMH-03-10B	0.25	1.23	4.86
SMH-03-71	0.04	0.26	7.05

Note:

1. Peak flow rate for all three meters was recorded during the wet weather event on December 11, 2024.

Rain Monitoring Program

As part of this project, Wright-Pierce installed, maintained, and removed one rain gauge within the flow metering area at the Royal River pump station.

The rain data was collected and automatically uploaded to Telog Enterprise, a Trimble data viewing portal. Wright-Pierce reviewed the rain data on Enterprise alongside the flow monitoring data for trends and anomalies. Rain data was reviewed to determine if suitable rain events were captured for a capacity assessment. Table 3 summarizes the rain events that occurred during the flow monitoring program. The largest rain event occurred on 12/11/2024, when 2.42 inches of precipitation was recorded. This correlates to an approximate 1-yaer, 24-hour design storm. Prior to and during the metering period, the Town of Yarmouth did not experience any drought conditions.

Table 3 Summary of Rain Events Greater than 0.50 Inches

Date of Rain Event	Total Rainfall (inches)	Storm Recurrence Interval[1]
12/4/2024	0.62	12-hour 1-year event
12/11/2024	2.42	24-hour 1-year event
12/17/2024	0.57	16-hour 1-year event
12/30/2024	0.82	12-hour 1-year event
1/1/2025	0.76	12-hour 1-year event

Note:

1. Estimated using NOAA Precipitation Frequency Estimates based on storm duration (hours) and total precipitation (inches).

Figure 2 Flow Data at SMH-03-03 From 12/4/2024 to 1/8/2025



Figure 3 Flow Data at SMH-03-10B From 12/4/2024 to 1/8/2025

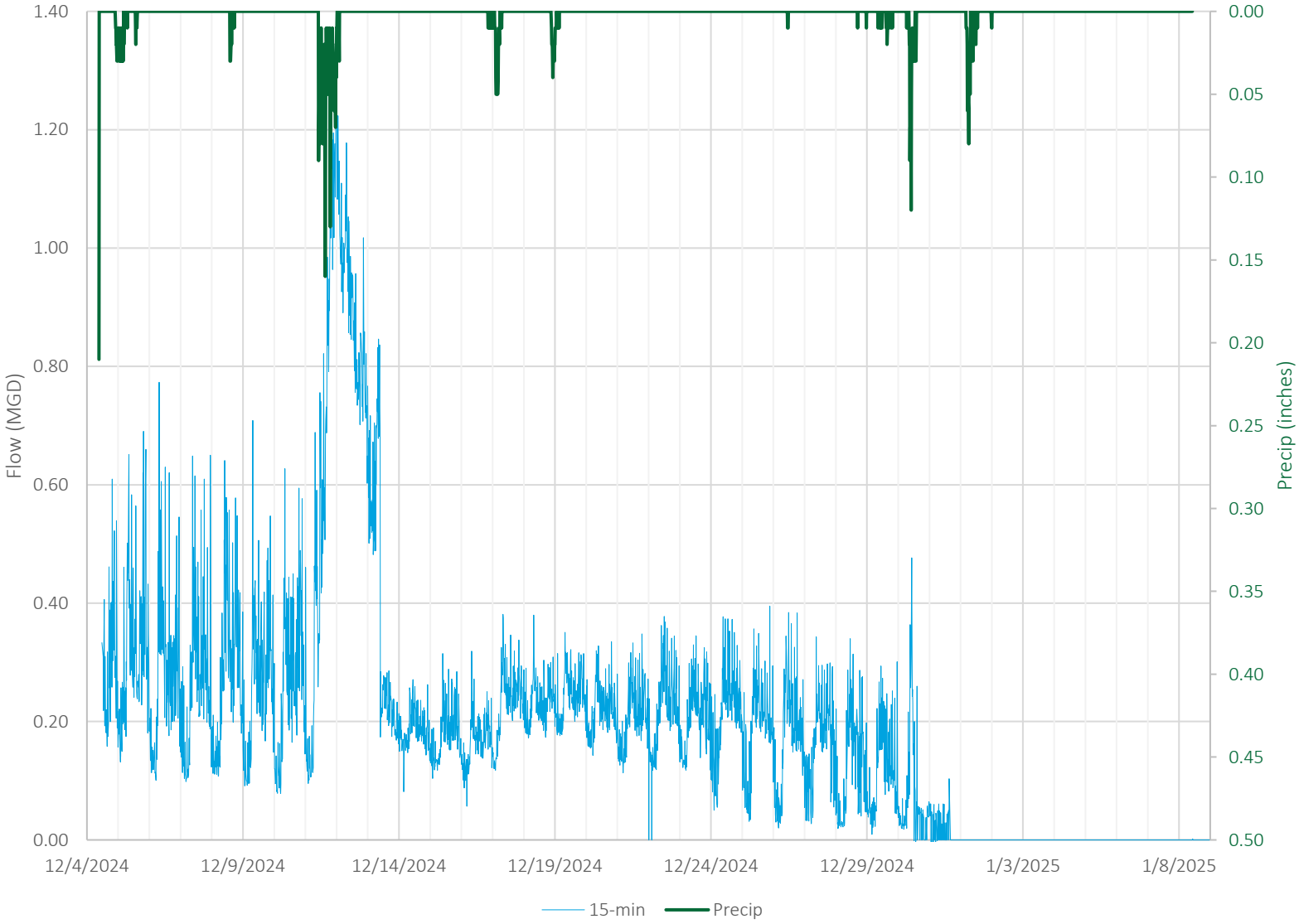

Figure 4 **Flow Data at SMH-03-71 From 12/4/2024 to 1/8/2025**

