SOUDER BUSINESS PARK

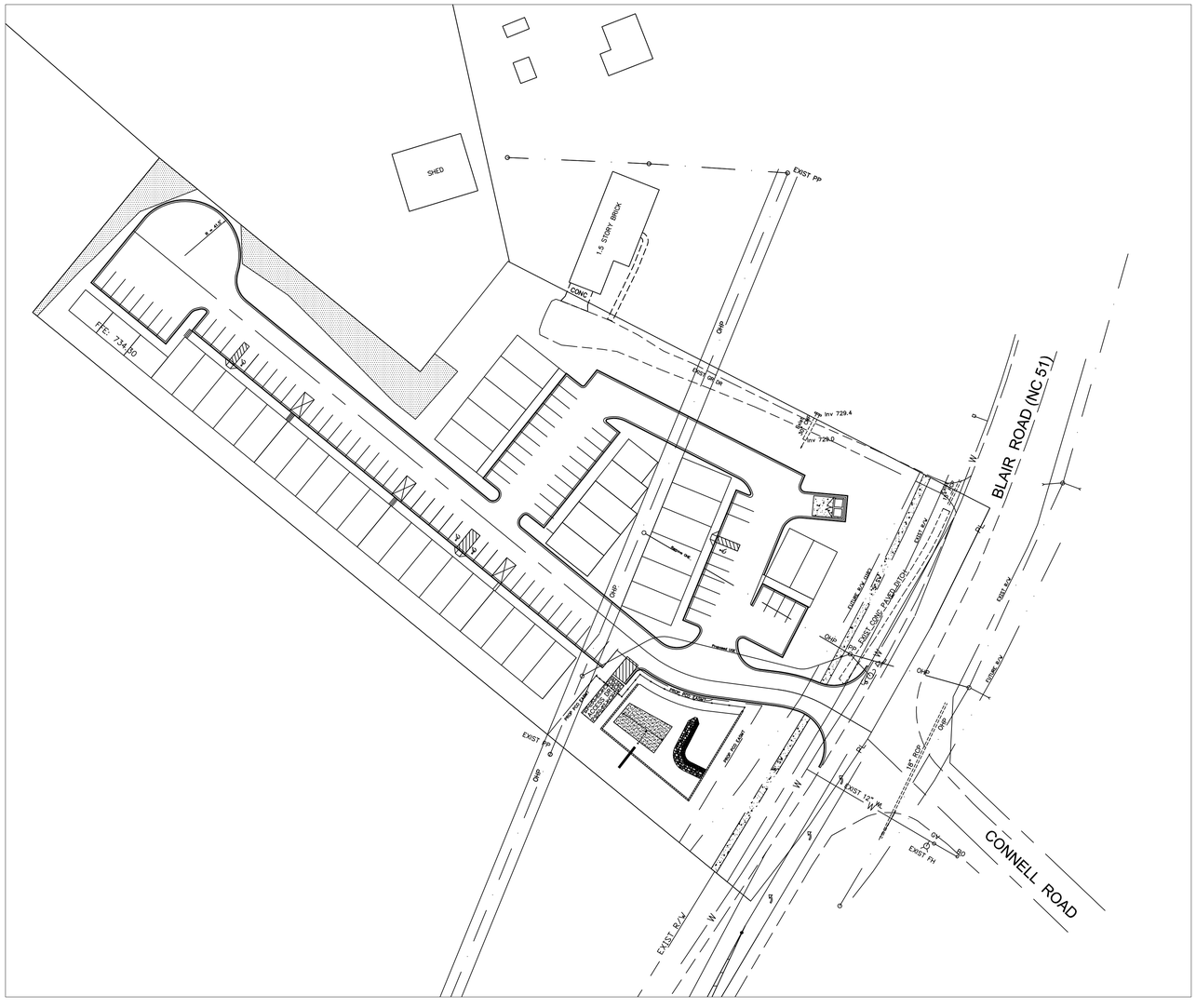

EPM # 422911

SHEET INDEX

COVER SHEET
LAYOUT – 1.0
GRADING & DRAINAGE PLAN – 2.0
EROSION CONTROL PLAN – 3.0
BMP DETAILS – 4.0
TURN LANES – 5.0
DRAINAGE AREA – 6.0
UNDETAINED & BYPASS DRAINAGE – 6.1

Denver Toler, PE
5917 Tillery Drive
Charlotte, NC 28226
(704) 526-7994
denvertoler@gmail.com

NO.	DATE	BY	ISSUE

SOUDER BUSINESS PARK
10821 BLAIR ROAD
MINT HILL
MECKLENBURG COUNTY
NORTH CAROLINA

SOUDER PROPERTIES
4614-B WILGROVE MINT HILL RD
CHARLOTTE
MECKLENBURG COUNTY
NORTH CAROLINA 28227
(704) 293-3666

COVER/INDEX SHEET

DESIGNED BY	DRAWN BY	CHECKED BY
DDT	DDT	DDT
SCALE	DATE	JOB NUMBER
NTS	03/01/21	

NORTH CAROLINA PROFESSIONAL SEAL 8767 6/11/21 ENGINEER DENVER D. TOLER

SHEET
COVER

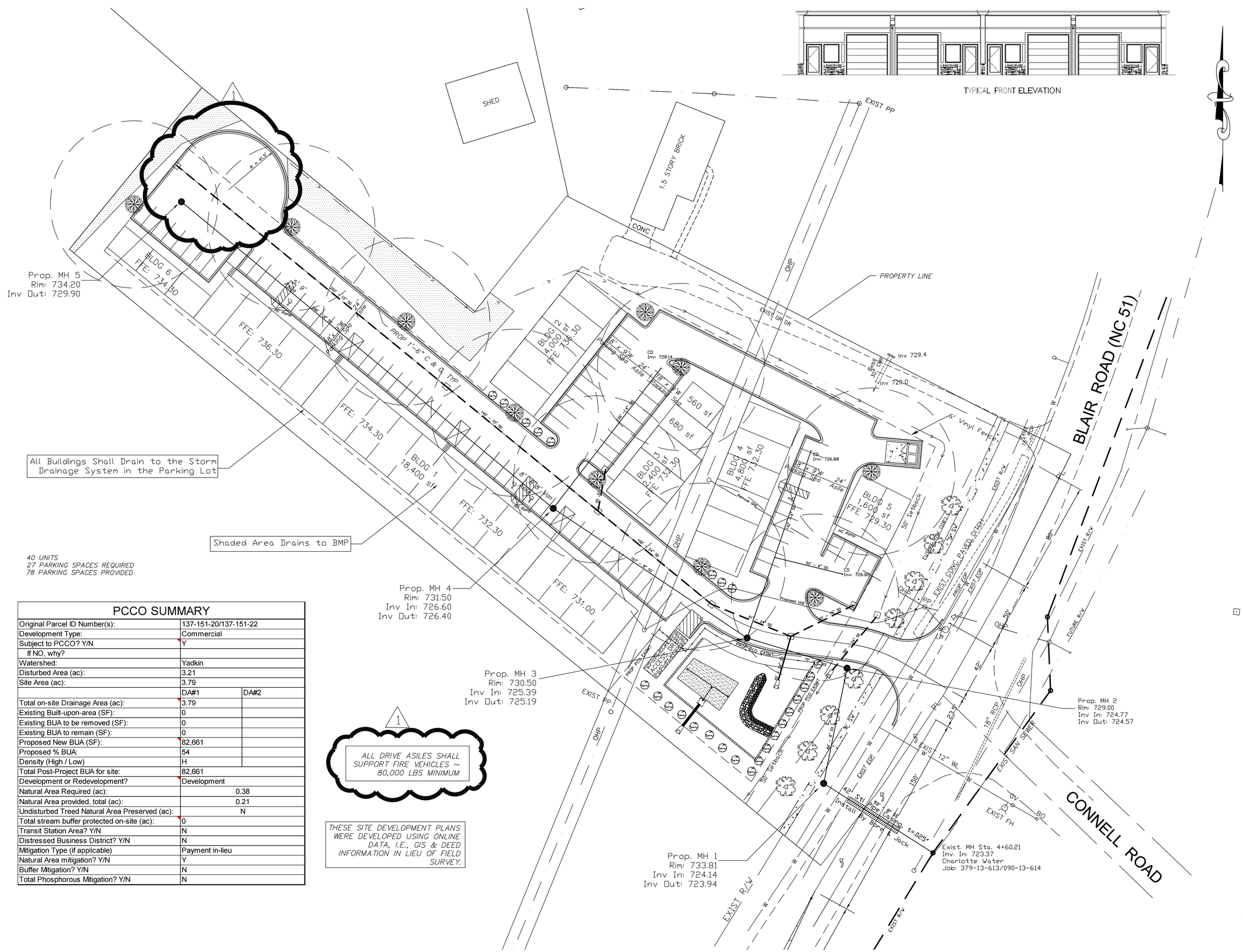

40 UNITS
27 PARKING SPACES REQUIRED
78 PARKING SPACES PROVIDED

PCCO SUMMARY		
Original Parcel ID Number(s):	137-151-20/137-151-22	
Development Type:	Commercial	
Subject to PCCO? Y/N	Y	
If NO, why?		
Watershed:	Yadkin	
Disturbed Area (ac):	3.21	
Site Area (ac):	3.79	
	DA#1	DA#2
Total on-site Drainage Area (ac):	3.79	
Existing Built-upon-area (SF):	0	
Existing BUA to be removed (SF):	0	
Existing BUA to remain (SF):	0	
Proposed New BUA (SF):	82,661	
Proposed % BUA:	54	
Density (High / Low)	H	
Total Post-Project BUA for site:	82,661	
Development or Redevelopment?	Development	
Natural Area Required (ac):	0.38	
Natural Area provided, total (ac):	0.21	
Undisturbed Treed Natural Area Preserved (ac):	N	
Total stream buffer protected on-site (ac):	0	
Transit Station Area? Y/N	N	
Distressed Business District? Y/N	N	
Mitigation Type (if applicable)	Payment in-lieu	
Natural Area mitigation? Y/N	Y	
Buffer Mitigation? Y/N	N	
Total Phosphorous Mitigation? Y/N	N	

1

ALL DRIVE ASILES SHALL SUPPORT FIRE VEHICLES ~ 80,000 LBS MINIMUM

THESE SITE DEVELOPMENT PLANS WERE DEVELOPED USING ONLINE DATA, I.E., GIS & DEED INFORMATION IN LIEU OF FIELD SURVEY.

Revisions:

NO.	DATE:	COMMENTS:
1	6/29/21	FIRE COMMENTS

Engineer:
Denver Toler, PE
5917 Tillery Drive
Charlotte, NC 28226
(704) 536-7994

SOUDER BUSINESS PARK
10821 BLAIR ROAD
MINT HILL, NC

LAYOUT PLAN

NORTH CAROLINA PROFESSIONAL SEAL 8767 06/11/21 ENGINEER DENVER D. TOLER

DRAWN BY: RLM
CHECKED BY: DDT
SCALE: 1"=30'
DATE: 11/05/18
SHEET: 1

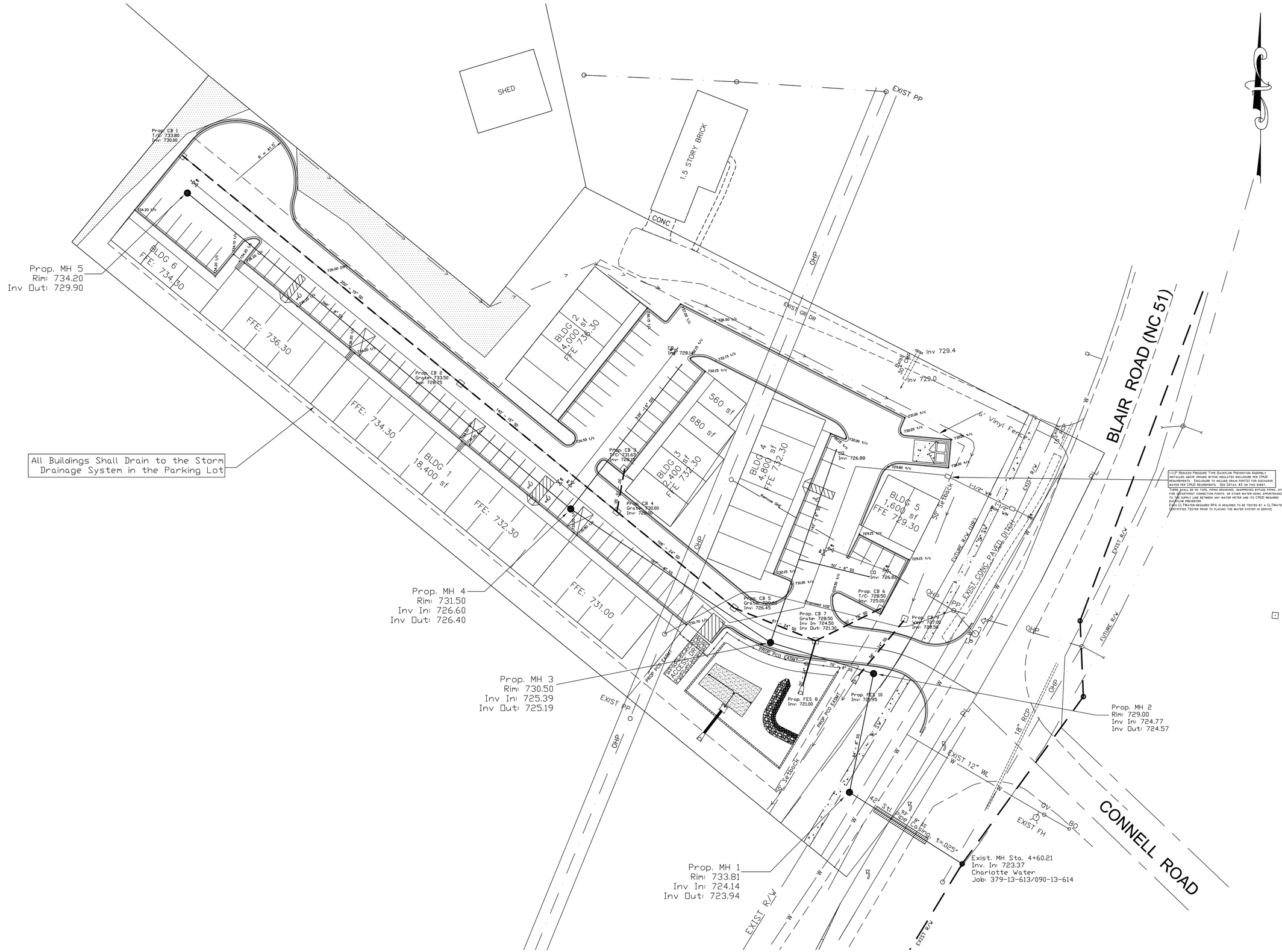

Revisions:

NO.	DATE:	COMMENTS:

Engineer:

Denver Toler, PE
5917 Tillery Drive
Charlotte, NC 28226
(704) 526-7994

SOUDER BUSINESS PARK
10821 BLAIR ROAD
MINT HILL, NC

GRADING & DRAINAGE PLAN

NORTH CAROLINA PROFESSIONAL SEAL 8767 06/11/21 ENGINEER DENVER D. TOLER

DRAWN BY:	CHECKED BY:
RLM	DDT

SCALE:	DATE:
1"=30'	11/05/18

SHEET: 2

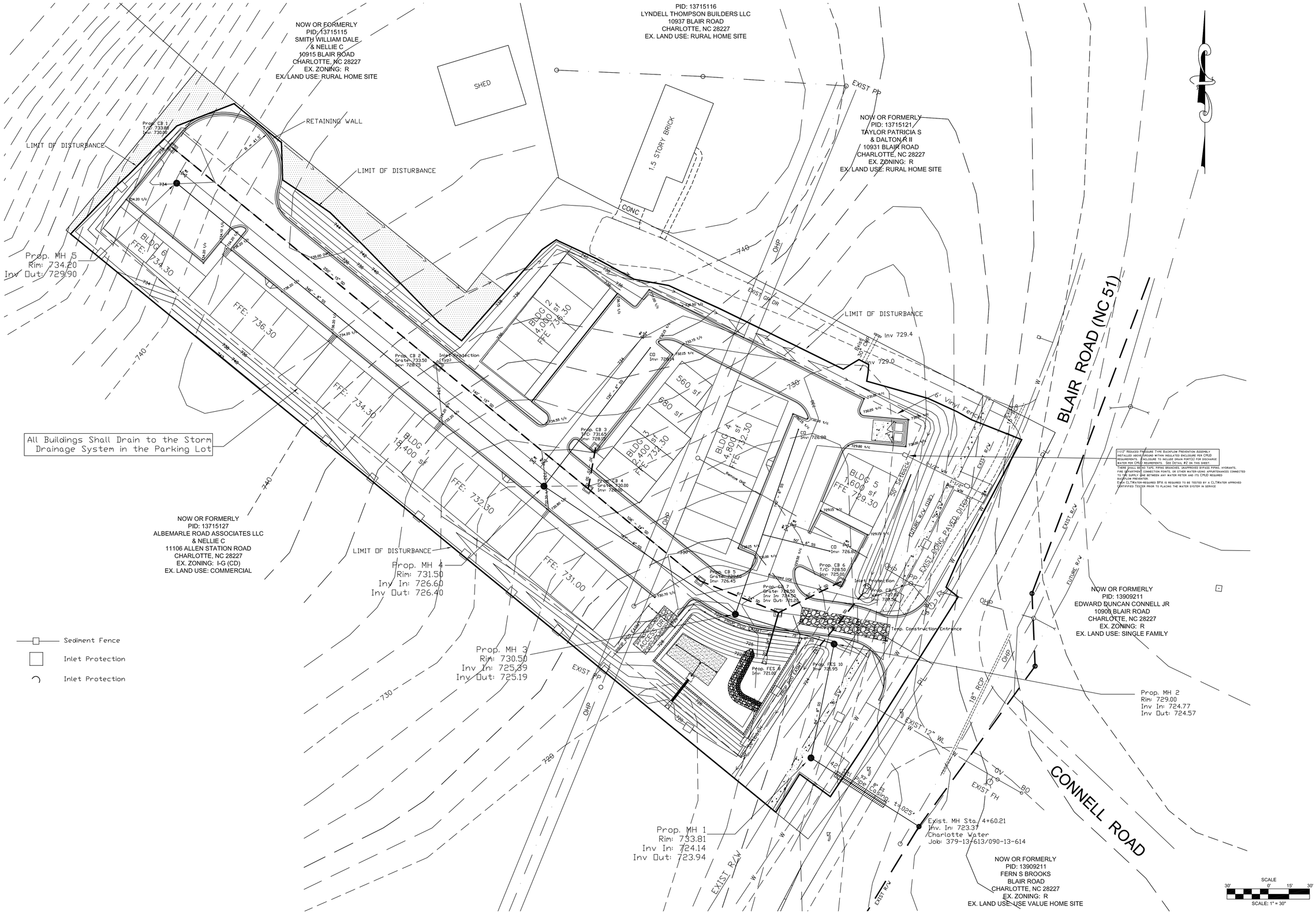

1-1/2" REDUCED PRESSURE TYPE BACKFLOW PREVENTION ASSEMBLY INSTALLED ABOVE GROUND WITHIN INSULATED ENCLOSURE PER CMUD REQUIREMENTS. ENCLOSURE TO INCLUDE DRAIN PORT(S) FOR DISCHARGE WATER PER CMUD REQUIREMENTS. SEE DETAIL #2 ON THIS SHEET.
THERE SHALL BEING TAPS, PIPING BRANCHES, UNAPPROVED BYPASS PIPING, HYDRANTS, FIRE DEPARTMENT CONNECTION POINTS, OR OTHER WATER-USING APPURTENANCES CONNECTED TO THE SUPPLY LINE BETWEEN ANY WATER METER AND ITS CMUD REQUIRED BACKFLOW PREVENTER.
EACH CLTWATER-REQUIRED BPA IS REQUIRED TO BE TESTED BY A CLTWATER APPROVED CERTIFIED TESTER PRIOR TO PLACING THE WATER SYSTEM IN SERVICE

Revisions:

NO.	DATE:	COMMENTS:

Engineer:
Denver Toler, PE
5917 Tillery Drive
Charlotte, NC 28226
(704) 526-7994

SOUDER BUSINESS PARK
10821 BLAIR ROAD
MINT HILL, NC

EROSION CONTROL PLAN

NORTH CAROLINA PROFESSIONAL ENGINEER SEAL 8767 06/11/21 ENGINEERING DENVER D. TOLER

DRAWN BY:	CHECKED BY:
RLM	DDT
SCALE: 1"=30'	DATE: 11/05/18

SHEET: 3

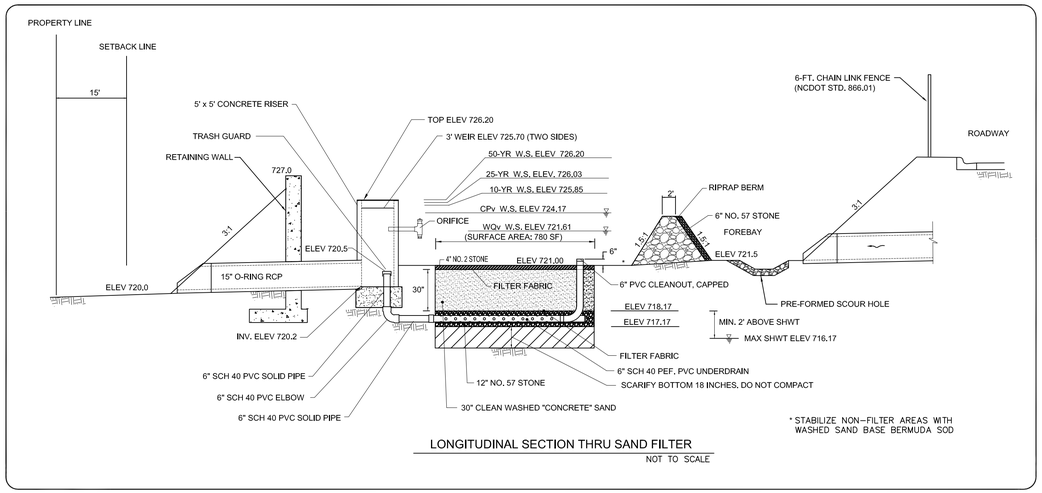

LONGITUDINAL SECTION THRU SAND FILTER

NOT TO SCALE

SITE ALLLOWABLE BUA SUMMARY CHART		
SITE AREA		165,092 SF
ROADS / PARKING		39,253 SF
CURB & GUTTER		3,353 SF
SIDEWALK / CONCRETE PADS		5,655 SF
BUILDINGS		34,400 SF
ETC.		0 SF
TOTAL MAX SITE BUA	**49.9 %**	**82,361 SF**
NOTE THAT A BUA AS-BUILT SURVEY SHALL BE PROVIDED PRIOR TO THE ISSUANCE OF A C.O.		

BUA SUMMARY

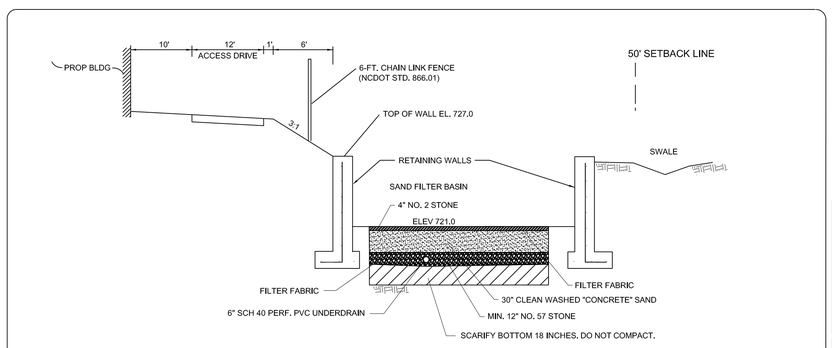

TRANSVERSE SECTION THRU SAND FILTER

NOT TO SCALE

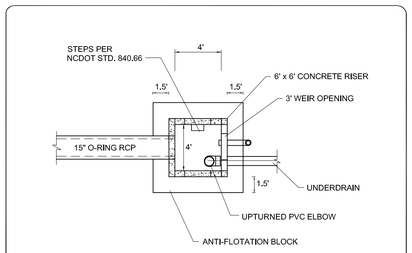

OUTLET STRUCTURE- PLAN

NOT TO SCALE

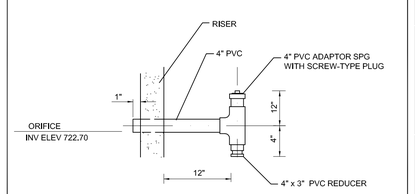

ORIFICE DETAIL

NOT TO SCALE

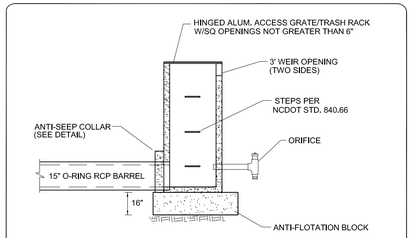

OUTLET STRUCTURE- SECTION

NOT TO SCALE

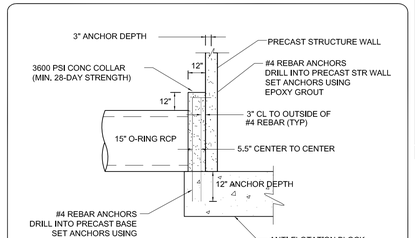

ANTI-SEEP COLLAR

NOT TO SCALE

ENLARGED BMP PLAN

SCALE
20' 0' 10' 20'
SCALE: 1" = 20'

Revisions:

NO.	DATE:	COMMENTS:

Engineer:
Denver Toler, PE
5917 Tillery Drive
Charlotte, NC 28226
(704) 526-7994

SOUDER BUSINESS PARK
10821 BLAIR ROAD
MINT HILL, NC

BMP DETAILS

NORTH CAROLINA PROFESSIONAL ENGINEER SEAL 8767 03/01/21 DENVER D. TOLER

DRAWN BY: RLM	CHECKED BY: DDT
SCALE: AS NOTED	DATE: 11/05/18

SHEET: 4

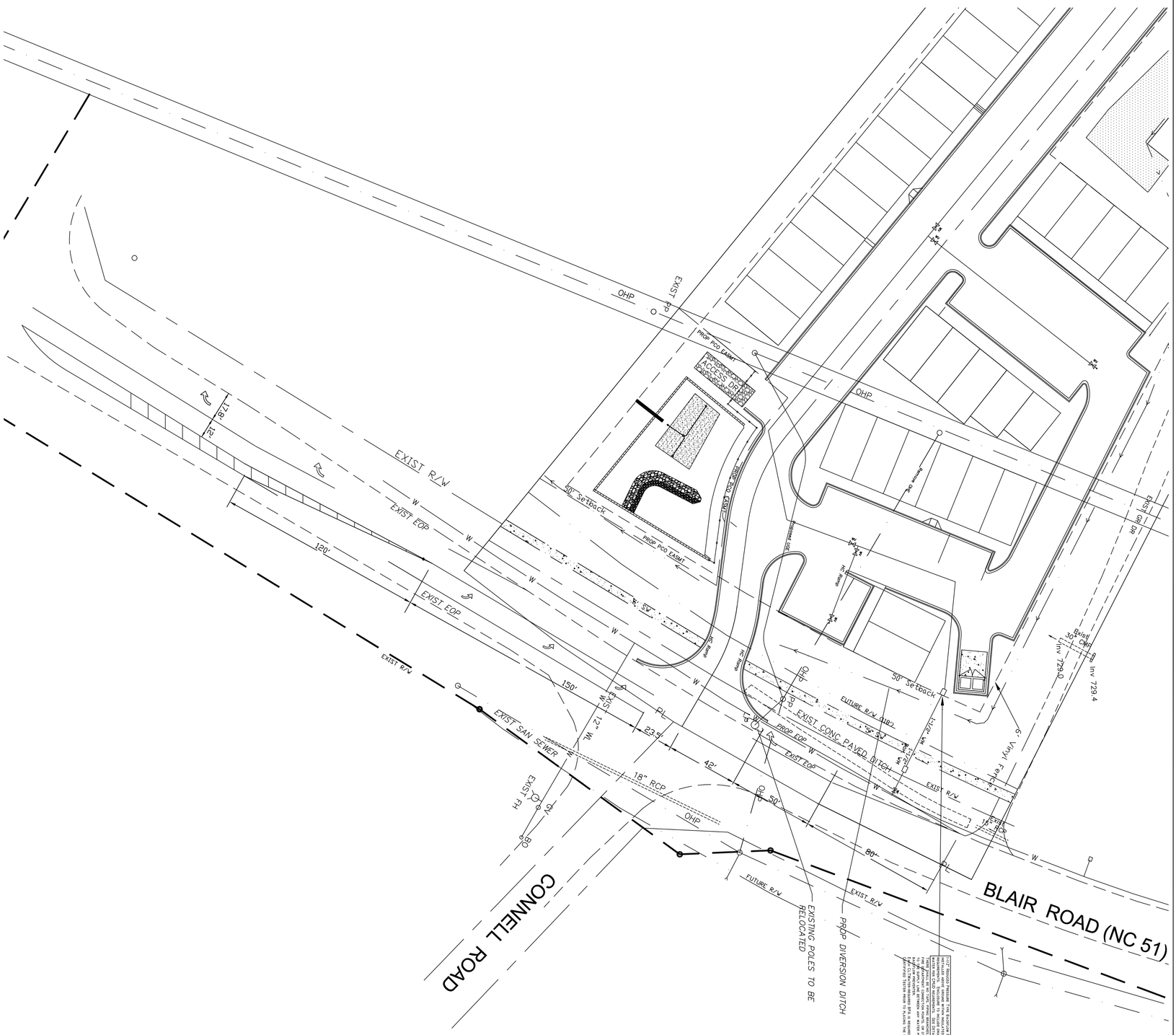

SHEET:	SCALE:	DRAWN BY:				Engineer:	Revisions:
5	1"=30'	RLM	NORTH CAROLINA PROFESSIONAL SEAL 040102 ENGINEER DENVER D. TOLER, III	SOUDER BUSINESS PARK 10821 BLAIR ROAD MINT HILL, NC		Denver Toler, PE 5917 Tillery Drive Charlotte, NC 28226 (704) 526-7994	NO. / DATE: / COMMENTS:
	DATE: 11/05/18	CHECKED BY: DDT		TURN LANES			

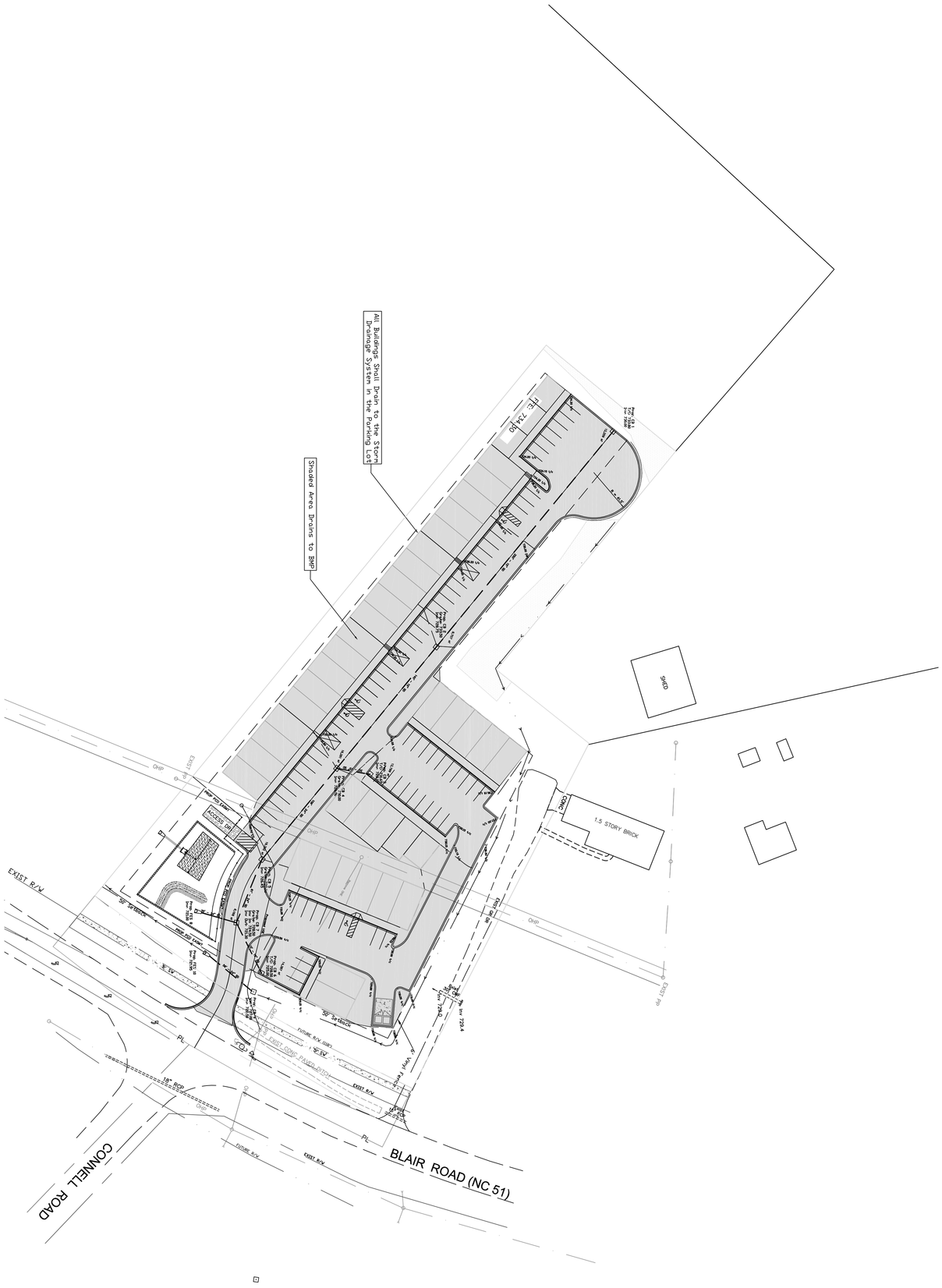
All Buildings Shall Drain to the Storm Drainage System in the Parking Lot
Shaded Area Drains to Bio
TC 724.50
SHED
1.5 STORY BRICK
HOUSE
EXIST R/W
CONNELL ROAD
BLAIR ROAD (NC 51)
PL
FUTURE R/W
EXIST R/W
EXIST 18" RCP
EXIST 24" RCP
EXIST 18" RCP
EXIST 24" RCP
EXIST 18" RCP
EXIST 24" RCP

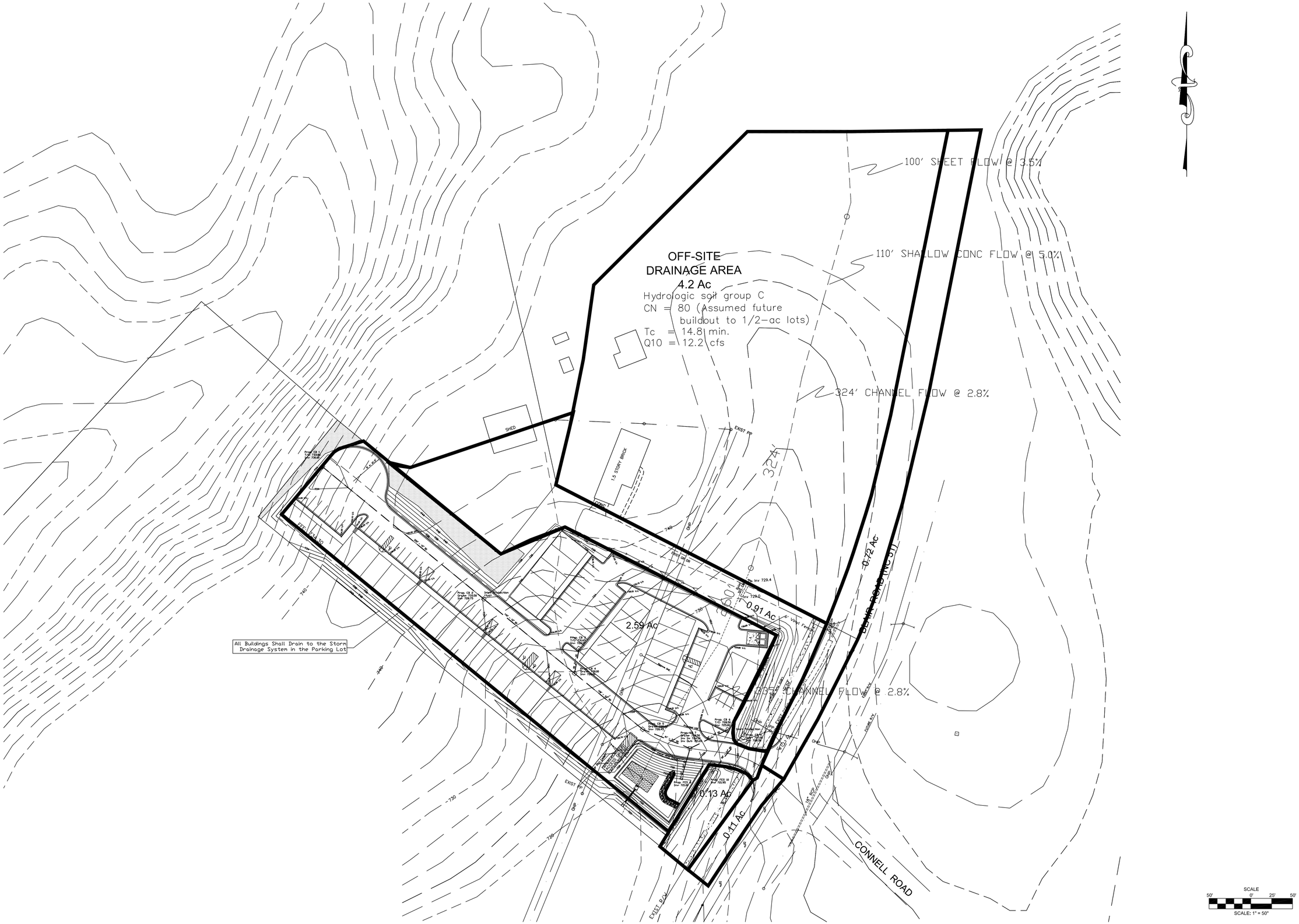

Revisions:

NO.	DATE:	COMMENTS:

Engineer:

Denver Toler, PE
5917 Tillery Drive
Charlotte, NC 28226
(704) 526-7994

SOUDER BUSINESS PARK
BLAIR ROAD
Mint Hill, NC

UNDETAINED & BYPASS DRAINAGE

NORTH CAROLINA PROFESSIONAL ENGINEER SEAL 8767 6/11/21 DENVER D. TOLER

DRAWN BY:	CHECKED BY:
RLM	DDT

SCALE:	DATE:
1"=50'	11/05/18

SHEET: 6.1