SITE NUMBER: 20
SITE NAME: MIDDLEBURY - CHIPMAN HILL

PROJECT INFORMATION

SCOPE OF WORK:	RELOCATION OF (1) DISH & (2) DIPOLE ANTENNAS FROM EXISTING GUY TOWER TO NEW LATTICE TOWER. INSTALLATION OF (1) DISH ANTENNA ON NEW LATTICE TOWER
APPLICANT:	VELCO (VERMONT TRANSCO LLC) 366 PINNACLE RIDGE ROAD RUTLAND, VT 05701
LANDLORD:	TOWN OF MIDDLEBURY 94 MAIN ST. MIDDLEBURY, VT 05733
SITE MANAGER:	VERIZON WIRELESS 118 FLANDERS RD WESTBOROUGH, MA 01581
SITE ADDRESS:	717 SPRINGSIDE DR MIDDLEBURY, VT 05753
LATITUDE:	44.026069° N 44° 01' 33.85" N
LONGITUDE:	72.215194° W 73° 09' 42.33" W
TYPE OF SITE:	LATTICE TOWER/INDOOR EQUIPMENT
TOWER HEIGHT:	163'-0"±
RAD CENTER:	120'-0"±
JURISDICTION:	NATIONAL, STATE & LOCAL CODES OR ORDINANCES
CURRENT USE:	TELECOMMUNICATIONS FACILITY
PROPOSED USE:	TELECOMMUNICATIONS FACILITY

DRAWING INDEX

SHEET NO.	DESCRIPTION	REV.
T-1	TITLE SHEET	1
GN-1	GENERAL NOTES	1
A-1	SITE PLAN	1
A-2	COMPOUND PLAN & ELEVATION	1
A-3	DETAILS	1
G-1	GROUNDING DETAILS	1

VICINITY MAP

DIRECTIONS TO SITE:

DEPART PINNACLE RIDGE RD TOWARD US-7. 0.1 MI. TURN LEFT ONTO US-7. 28.4 MI. TURN RIGHT ONTO WASHINGTON ST. 0.3 MI. TURN BACK ON SEMINARY ST. 121 FT. TURN RIGHT ONTO SPRINGSIDE RD. ARRIVE AT ENTRANCE TO SITE AT THE END OF THE ROAD

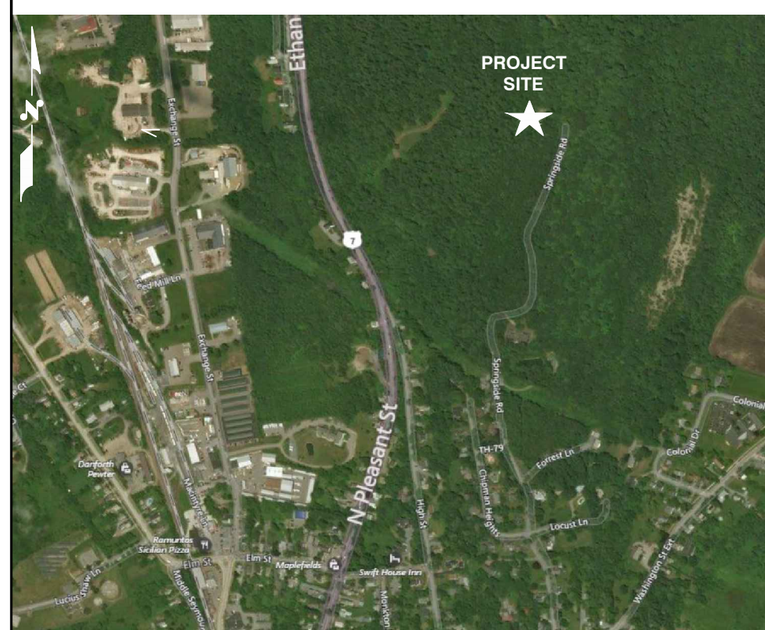

GENERAL NOTES

1. THIS DOCUMENT IS THE CREATION, DESIGN, PROPERTY AND COPYRIGHTED WORK OF VELCO. ANY DUPLICATION OR USE WITHOUT EXPRESS WRITTEN CONSENT IS STRICTLY PROHIBITED. DUPLICATION AND USE BY GOVERNMENT AGENCIES FOR THE PURPOSES OF CONDUCTING THEIR LAWFULLY AUTHORIZED REGULATORY AND ADMINISTRATIVE FUNCTIONS IS SPECIFICALLY ALLOWED.
2. THE FACILITY IS AN UNMANNED PRIVATE AND SECURED EQUIPMENT INSTALLATION. IT IS ONLY ACCESSED BY TRAINED TECHNICIANS FOR PERIODIC ROUTINE MAINTENANCE AND THEREFORE DOES NOT REQUIRE ANY WATER OR SANITARY SEWER SERVICE. THE FACILITY IS NOT GOVERNED BY REGULATIONS REQUIRING PUBLIC ACCESS PER ADA REQUIREMENTS.
3. CONTRACTOR SHALL VERIFY ALL PLANS AND EXISTING DIMENSIONS AND CONDITIONS ON THE JOB SITE AND SHALL IMMEDIATELY NOTIFY THE VELCO REPRESENTATIVE IN WRITING OF DISCREPANCIES BEFORE PROCEEDING WITH THE WORK OR BE RESPONSIBLE FOR SAME.
4. CONSTRUCTION DRAWINGS ARE VALID FOR SIX MONTHS AFTER ENGINEER OF RECORD'S STAMPED AND SIGNED SUBMITTAL DATE LISTED HEREIN.

CALL 811

WWW.DIGSAFE.COM
72 HOURS PRIOR
UNDERGROUND SERVICE ALERT

HUDSON Design Group LLC
45 BEECHWOOD DRIVE
NORTH ANDOVER, MA 01845
TEL: (978) 557-5553
FAX: (978) 336-5586

366 PINNACLE RIDGE ROAD
RUTLAND, VT 05701

SITE NUMBER:
SITE NAME: MIDDLEBURY - CHIPMAN HILL
717 SPRINGSIDE DR
MIDDLEBURY, VT 05753
ADDISON COUNTY

AIROSMITH DEVELOPMENT INC.
125 HIGH ROCK AVENUE
SARATOGA SPRINGS, NY 12866

NO.	DATE	REVISIONS	BY	CHK	APP'D
1	09/06/18	ISSUED FOR PERMITTING	SB	AT	DHC
A	08/28/18	ISSUED FOR REVIEW	SB	AT	DHC

SCALE: AS SHOWN | DESIGNED BY: AT | DRAWN BY: SB

STATE OF VERMONT DEREK J. CREASEY NO. 80882 CIVIL LICENSED PROFESSIONAL ENGINEER

VELCO

TITLE SHEET

JOB NUMBER	DRAWING NUMBER	REV
20	T-1	1

GROUNDING NOTES

1. THE SUBCONTRACTOR SHALL REVIEW AND INSPECT THE EXISTING FACILITY GROUNDING SYSTEM AND LIGHTNING PROTECTION SYSTEM (AS DESIGNED AND INSTALLED) FOR STRICT COMPLIANCE WITH THE NEC (AS ADOPTED BY THE AHJ), THE SITE-SPECIFIC (UL, LPI, OR NFPA) LIGHTING PROTECTION CODE, AND GENERAL COMPLIANCE WITH TELCORDIA AND TIA GROUNDING STANDARDS. THE SUBCONTRACTOR SHALL REPORT ANY VIOLATIONS OR ADVERSE FINDINGS TO THE CONTRACTOR FOR RESOLUTION.

2. ALL GROUND ELECTRODE SYSTEMS (INCLUDING TELECOMMUNICATION, RADIO, LIGHTNING PROTECTION, AND AC POWER GES'S) SHALL BE BONDED TOGETHER, AT OR BELOW GRADE, BY TWO OR MORE COPPER BONDING CONDUCTORS IN ACCORDANCE WITH THE NEC.

3. THE SUBCONTRACTOR SHALL PERFORM IEEE FALL-OF-POTENTIAL RESISTANCE TO EARTH TESTING (PER IEEE 1100 AND 81) FOR NEW GROUND ELECTRODE SYSTEMS. THE SUBCONTRACTOR SHALL FURNISH AND INSTALL SUPPLEMENTAL GROUND ELECTRODES AS NEEDED TO ACHIEVE A TEST RESULT OF 5 OHMS OR LESS.

4. METAL RACEWAY SHALL NOT BE USED AS THE NEC REQUIRED EQUIPMENT GROUND CONDUCTOR. STRANDED COPPER CONDUCTORS WITH GREEN INSULATION, SIZED IN ACCORDANCE WITH THE NEC, SHALL BE FURNISHED AND INSTALLED WITH THE POWER CIRCUITS TO BTS EQUIPMENT.

5. EACH BTS CABINET FRAME SHALL BE DIRECTLY CONNECTED TO THE MASTER GROUND BAR WITH GREEN INSULATED SUPPLEMENTAL EQUIPMENT GROUND WIRES, 6 AWG STRANDED COPPER OR LARGER FOR INDOOR BTS 2 AWG STRANDED COPPER FOR OUTDOOR BTS.

6. EXOTHERMIC WELDS SHALL BE USED FOR ALL GROUNDING CONNECTIONS BELOW GRADE.

7. APPROVED ANTIOXIDANT COATINGS (I.E., CONDUCTIVE GEL OR PASTE) SHALL BE USED ON ALL COMPRESSION AND BOLTED GROUND CONNECTIONS.

8. ICE BRIDGE BONDING CONDUCTORS SHALL BE EXOTHERMICALLY BONDED OR BOLTED TO GROUND BAR.

9. ALUMINUM CONDUCTOR OR COPPER CLAD STEEL CONDUCTOR SHALL NOT BE USED FOR GROUNDING CONNECTIONS.

10. MISCELLANEOUS ELECTRICAL AND NON-ELECTRICAL METAL BOXES, FRAMES AND SUPPORTS SHALL BE BONDED TO THE GROUND RING, IN ACCORDANCE WITH THE NEC.

11. METAL CONDUIT SHALL BE MADE ELECTRICALLY CONTINUOUS WITH LISTED BONDING FITTINGS OR BY BONDING ACROSS THE DISCONTINUITY WITH 6 AWS COPPER WIRE UL APPROVED GROUNDING TYPE CONDUIT CLAMPS.

12. ALL NEW STRUCTURES WITH A FOUNDATION AND/OR FOOTING HAVING 20 FT. OR MORE OF 1/2 IN. OR GREATER ELECTRICALLY CONDUCTIVE REINFORCING STEEL MUST HAVE IT BONDED TO THE GROUND RING USING AN EXOTHERMIC WELD CONNECTION USING #2 AWG SOLID BARE TINNED COPPER GROUND WIRE, PER NEC 250.50

GENERAL NOTES

1. FOR THE PURPOSE OF CONSTRUCTION DRAWING, THE FOLLOWING DEFINITIONS SHALL APPLY:

   CONTRACTOR – AIROSMITH
   SUBCONTRACTOR – GENERAL CONTRACTOR (CONSTRUCTION)
   OWNER – VELCO

2. PRIOR TO THE SUBMISSION OF BIDS, THE BIDDING SUBCONTRACTOR SHALL VISIT THE CELL SITE TO FAMILIARIZE WITH THE EXISTING CONDITIONS AND TO CONFIRM THAT THE WORK CAN BE ACCOMPLISHED AS SHOWN ON THE CONSTRUCTION DRAWINGS. ANY DISCREPANCY FOUND SHALL BE BROUGHT TO THE ATTENTION OF CONTRACTOR.

3. ALL MATERIALS FURNISHED AND INSTALLED SHALL BE IN STRICT ACCORDANCE WITH ALL APPLICABLE CODES, REGULATIONS, AND ORDINANCES. SUBCONTRACTOR SHALL ISSUE ALL APPROPRIATE NOTICES AND COMPLY WITH ALL LAWS, ORDINANCES, RULES, REGULATIONS, AND LAWFUL ORDERS OF ANY PUBLIC AUTHORITY REGARDING THE PERFORMANCE OF THE WORK. ALL WORK CARRIED OUT SHALL COMPLY WITH ALL APPLICABLE MUNICIPAL AND UTILITY COMPANY SPECIFICATIONS AND LOCAL JURISDICTIONAL CODES, ORDINANCES AND APPLICABLE REGULATIONS.

4. DRAWINGS PROVIDED HERE ARE NOT TO BE SCALED AND ARE INTENDED TO SHOW OUTLINE ONLY.

5. UNLESS NOTED OTHERWISE, THE WORK SHALL INCLUDE FURNISHING MATERIALS, EQUIPMENT, APPURTENANCES, AND LABOR NECESSARY TO COMPLETE ALL INSTALLATIONS AS INDICATED ON THE DRAWINGS.

6. "KITTING LIST" SUPPLIED WITH THE BID PACKAGE IDENTIFIES ITEMS THAT WILL BE SUPPLIED BY CONTRACTOR. ITEMS NOT INCLUDED IN THE BILL OF MATERIALS AND KITTING LIST SHALL BE SUPPLIED BY THE SUBCONTRACTOR.

7. THE SUBCONTRACTOR SHALL INSTALL ALL EQUIPMENT AND MATERIALS IN ACCORDANCE WITH MANUFACTURER'S RECOMMENDATIONS UNLESS SPECIFICALLY STATED OTHERWISE.

8. IF THE SPECIFIED EQUIPMENT CANNOT BE INSTALLED AS SHOWN ON THESE DRAWINGS, THE SUBCONTRACTOR SHALL PROPOSE AN ALTERNATIVE INSTALLATION SPACE FOR APPROVAL BY THE CONTRACTOR.

9. SUBCONTRACTOR SHALL DETERMINE ACTUAL ROUTING OF CONDUIT, POWER AND T1 CABLES, GROUNDING CABLES AS SHOWN ON THE POWER, GROUNDING AND TELCO PLAN DRAWING. SUBCONTRACTOR SHALL UTILIZE EXISTING TRAYS AND/OR SHALL ADD NEW TRAYS AS NECESSARY. SUBCONTRACTOR SHALL CONFIRM THE ACTUAL ROUTING WITH THE CONTRACTOR.

10. THE SUBCONTRACTOR SHALL PROTECT EXISTING IMPROVEMENTS, PAVEMENTS, CURBS, LANDSCAPING AND STRUCTURES. ANY DAMAGED PART SHALL BE REPAIRED AT SUBCONTRACTOR'S EXPENSE TO THE SATISFACTION OF OWNER.

11. SUBCONTRACTOR SHALL LEGALLY AND PROPERLY DISPOSE OF ALL SCRAP MATERIALS SUCH AS COAXIAL CABLES AND OTHER ITEMS REMOVED FROM THE EXISTING FACILITY. ANTENNAS REMOVED SHALL BE RETURNED TO THE OWNER'S DESIGNATED LOCATION.

12. SUBCONTRACTOR SHALL LEAVE PREMISES IN CLEAN CONDITION.

13. ALL CONCRETE REPAIR WORK SHALL BE DONE IN ACCORDANCE WITH AMERICAN CONCRETE INSTITUTE (ACI) 301.

14. ANY NEW CONCRETE NEEDED FOR THE CONSTRUCTION SHALL BE AIR-ENTRAINED AND SHALL HAVE 4000 PSI STRENGTH AT 28 DAYS. ALL CONCRETE WORK SHALL BE DONE IN ACCORDANCE WITH ACI 318 CODE REQUIREMENTS.

15. ALL STRUCTURAL STEEL WORK SHALL BE DETAILED, FABRICATED AND ERECTED IN ACCORDANCE WITH AISC SPECIFICATIONS. ALL STRUCTURAL STEEL SHALL BE ASTM A36 (Fy = 36 ksi) UNLESS OTHERWISE NOTED. PIPES SHALL BE ASTM A53 TYPE E (Fy = 36 ksi). ALL STEEL EXPOSED TO WEATHER SHALL BE HOT DIPPED GALVANIZED. TOUCHUP ALL SCRATCHES AND OTHER MARKS IN THE FIELD AFTER STEEL IS ERECTED USING A COMPATIBLE ZINC RICH PAINT.

16. CONSTRUCTION SHALL COMPLY WITH SPECIFICATIONS AND "GENERAL CONSTRUCTION SERVICES FOR CONSTRUCTION OF AT&T SITES."

17. SUBCONTRACTOR SHALL VERIFY ALL EXISTING DIMENSIONS AND CONDITIONS PRIOR TO COMMENCING ANY WORK. ALL DIMENSIONS OF EXISTING CONSTRUCTION SHOWN ON THE DRAWINGS MUST BE VERIFIED. SUBCONTRACTOR SHALL NOTIFY THE CONTRACTOR OF ANY DISCREPANCIES PRIOR TO ORDERING MATERIAL OR PROCEEDING WITH CONSTRUCTION.

18. THE EXISTING CELL SITE IS IN FULL COMMERCIAL OPERATION. ANY CONSTRUCTION WORK BY SUBCONTRACTOR SHALL NOT DISRUPT THE EXISTING NORMAL OPERATION. ANY WORK ON EXISTING EQUIPMENT MUST BE COORDINATED WITH CONTRACTOR. ALSO, WORK SHOULD BE SCHEDULED FOR AN APPROPRIATE MAINTENANCE WINDOW USUALLY IN LOW TRAFFIC PERIODS AFTER MIDNIGHT.

19. SINCE THE CELL SITE IS ACTIVE, ALL SAFETY PRECAUTIONS MUST BE TAKEN WHEN WORKING AROUND HIGH LEVELS OF ELECTROMAGNETIC RADIATION. EQUIPMENT SHOULD BE SHUTDOWN PRIOR TO PERFORMING ANY WORK THAT COULD EXPOSE THE WORKERS TO DANGER. PERSONAL RF EXPOSURE MONITORS ARE ADVISED TO BE WORN TO ALERT OF ANY DANGEROUS EXPOSURE LEVELS.

20. APPLICABLE BUILDING CODES:
    SUBCONTRACTOR'S WORK SHALL COMPLY WITH ALL APPLICABLE NATIONAL, STATE, AND LOCAL CODES AS ADOPTED BY THE LOCAL AUTHORITY HAVING JURISDICTION (AHJ) FOR THE LOCATION. THE EDITION OF THE AHJ ADOPTED CODES AND STANDARDS IN EFFECT ON THE DATE OF CONTRACT AWARD SHALL GOVERN THE DESIGN.
    BUILDING CODE: IBC 2015 WITH VT FIRE & SAFETY CODE AMENDMENTS
    ELECTRICAL CODE: NFPA 70 NATIONAL ELECTRICAL CODE, 2014 EDITION
    LIGHTENING CODE: REFER TO ELECTRICAL DRAWINGS

    SUBCONTRACTOR'S WORK SHALL COMPLY WITH THE LATEST EDITION OF THE FOLLOWING STANDARDS:

    AMERICAN CONCRETE INSTITUTE (ACI) 318; BUILDING CODE REQUIREMENTS FOR STRUCTURAL CONCRETE;

    AMERICAN INSTITUTE OF STEEL CONSTRUCTION (AISC)

    MANUAL OF STEEL CONSTRUCTION, ASD, FOURTEENTH EDITION;

    TELECOMMUNICATIONS INDUSTRY ASSOCIATION (TIA) 222-H, STRUCTURAL STANDARDS FOR STEEL

    EQUIPMENT AND ANTENNA SUPPORTING STRUCTURES; REFER TO ELECTRICAL DRAWINGS FOR SPECIFIC ELECTRICAL STANDARDS.

FOR ANY CONFLICTS BETWEEN SECTIONS OF LISTED CODES AND STANDARDS REGARDING MATERIAL, METHODS OF CONSTRUCTION, OR OTHER REQUIREMENTS, THE MOST RESTRICTIVE REQUIREMENT SHALL GOVERN. WHERE THERE IS CONFLICT BETWEEN A GENERAL REQUIREMENT AND A SPECIFIC REQUIREMENT, THE SPECIFIC REQUIREMENT SHALL GOVERN.

ABBREVIATIONS

AGL	ABOVE GRADE LEVEL	EQ	EQUAL	REQ	REQUIRED
AWG	AMERICAN WIRE GAUGE	GC	GENERAL CONTRACTOR	RF	RADIO FREQUENCY
BBU	BATTERY BACKUP UNIT	GRC	GALVANIZED RIGID CONDUIT	TBD	TO BE DETERMINED
BTCW	BARE TINNED SOLID COPPER WIRE	MGB	MASTER GROUND BAR	TBR	TO BE REMOVED
BGR	BURIED GROUND RING	MIN	MINIMUM	TBRR	TO BE REMOVED AND REPLACED
BTS	BASE TRANSCEIVER STATION	P	PROPOSED	TYP	TYPICAL
E	EXISTING	NTS	NOT TO SCALE	UG	UNDER GROUND
EGB	EQUIPMENT GROUND BAR	RAD	RADIATION CENTER LINE (ANTENNA)	VIF	VERIFY IN FIELD
EGR	EQUIPMENT GROUND RING	REF	REFERENCE		

STATE OF VERMONT
DEREK J. CREASEY
NO. 80882
CIVIL
LICENSED
PROFESSIONAL ENGINEER

HDG HUDSON Design Group LLC
45 BEECHWOOD DRIVE
NORTH ANDOVER, MA 01845
TEL: (978) 557-5553
FAX: (978) 336-5586

VERMONT ELECTRIC VELCO POWER COMPANY, INC.
366 PINNACLE RIDGE ROAD
RUTLAND, VT 05701

SITE NUMBER:
SITE NAME: MIDDLEBURY - CHIPMAN HILL
717 SPRINGSIDE DR
MIDDLEBURY, VT 05753
ADDISON COUNTY

AIROSMITH DEVELOPMENT
AIROSMITH DEVELOPMENT INC.
125 HIGH ROCK AVENUE
SARATOGA SPRINGS, NY 12866

NO.	DATE	REVISIONS	BY	CHK	APD
1	09/06/18	ISSUED FOR PERMITTING	SB	AT	DPH
A	08/28/18	ISSUED FOR REVIEW	SB	AT	DPH

SCALE: AS SHOWN | DESIGNED BY: AT | DRAWN BY: SB

VELCO

GENERAL NOTES

JOB NUMBER	DRAWING NUMBER	REV
20	GN-1	1

PROJECT INFORMATION & DIMENSIONS

	EXISTING (PRIOR TO MINIMIS MODIFICATIONS)					PROPOSED					NET INCREASE (SQ.FT)
	EQUIPMENT	DIMENSIONS (INCHES) H	DIMENSIONS (INCHES) W	QTY.	VISIBLE AREA (SQ.FT)	EQUIPMENT	DIMENSIONS (INCHES) H	DIMENSIONS (INCHES) W	QTY.	VISIBLE AREA (SQ.FT)	
SURFACE AREA OF THE FACES OF ANTENNAS ON SUPPORT STRUCTURE	DIPOLE	86.8	x 3	(2)	3.62						
	DISH	26.0ø			3.69	DISH	74.8ø			30.52	
						EXISTING EQUIPMENT TO REMAIN					
						DIPOLE	86.8	x 3	(2)	3.62	
						DISH	26.0ø			3.69	30.52
	TOTAL VISIBLE AREA:				7.31	**TOTAL VISIBLE AREA: 34.14**					
VERTICAL EXTENSION FROM EXISTING SUPPORT STRUCTURE	0					0					0
HORIZONTAL EXTENSION FROM EXISTING SUPPORT STRUCTURE	APPROX. 4'–0"					APPROX. 5'–6"					1'–6"±
AMOUNT OF IMPERVIOUS SURFACE BEING ADDED TO SITE	0 FT^2					0 FT^2					0'

14°13'
MAGNETIC NORTH
TRUE NORTH

SITE PLAN (1 / A–1)
22x34 SCALE: 1"=200'
11x17 SCALE: 1"=400'

100' 200' 400' 600'

STATE OF VERMONT
DEREK J. CREASER
NO. 80882
CIVIL
LICENSED
PROFESSIONAL ENGINEER

HUDSON Design Group LLC
45 BEECHWOOD DRIVE
NORTH ANDOVER, MA 01845
TEL: (978) 557-5553
FAX: (978) 336-5586

VERMONT ELECTRIC POWER COMPANY, INC.
366 PINNACLE RIDGE ROAD
RUTLAND, VT 05701

SITE NUMBER:
SITE NAME: MIDDLEBURY - CHIPMAN HILL
717 SPRINGSIDE DR
MIDDLEBURY, VT 05753
ADDISON COUNTY

AIROSMITH DEVELOPMENT INC.
125 HIGH ROCK AVENUE
SARATOGA SPRINGS, NY 12866

NO.	DATE	REVISIONS	BY	CHK	APP'D
1	09/06/18	ISSUED FOR PERMITTING	SB	AT	DPH
A	08/28/18	ISSUED FOR REVIEW	SB	AT	DPH

SCALE: AS SHOWN | DESIGNED BY: AT | DRAWN BY: SB

VELCO
SITE PLAN

JOB NUMBER	DRAWING NUMBER	REV
20	A–1	1

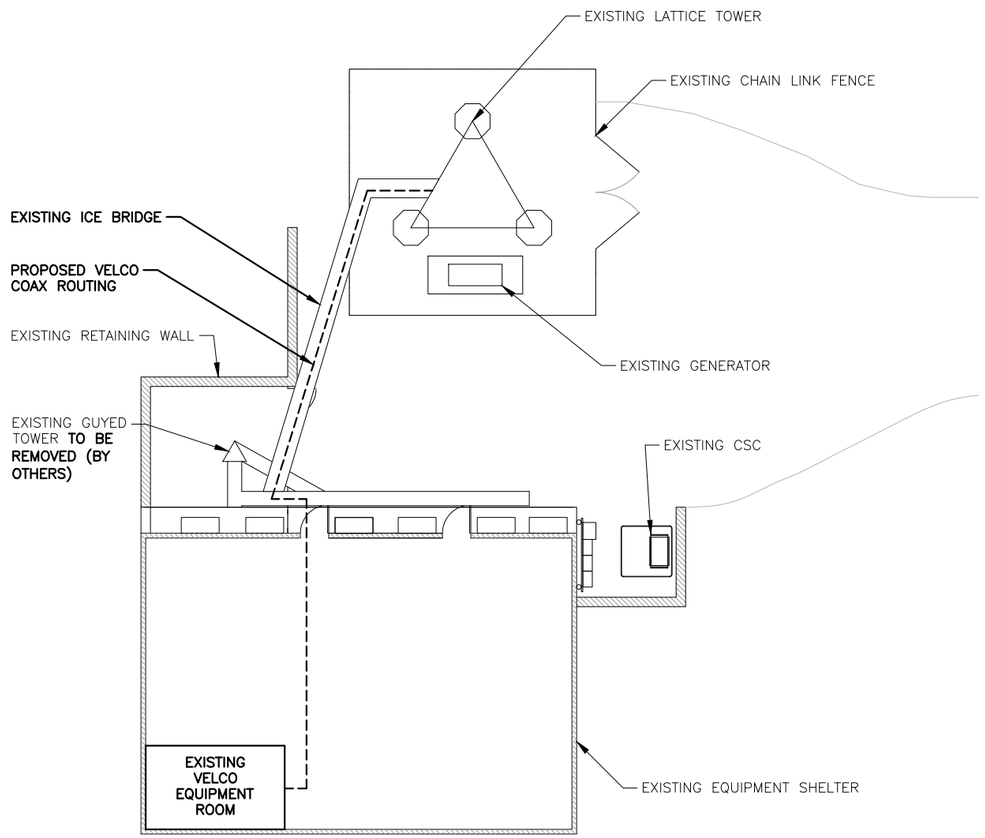

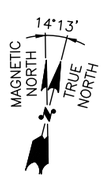

COMPOUND PLAN (1 / A–1)
22x34 SCALE: 1/8"=1'–0"
11x17 SCALE: 1/16"=1'–0"

0 4'–0" 8'–0" 16'–0" 24'–0"

NO NEW IMPERVIOUS AREA IS BEING PROPOSED

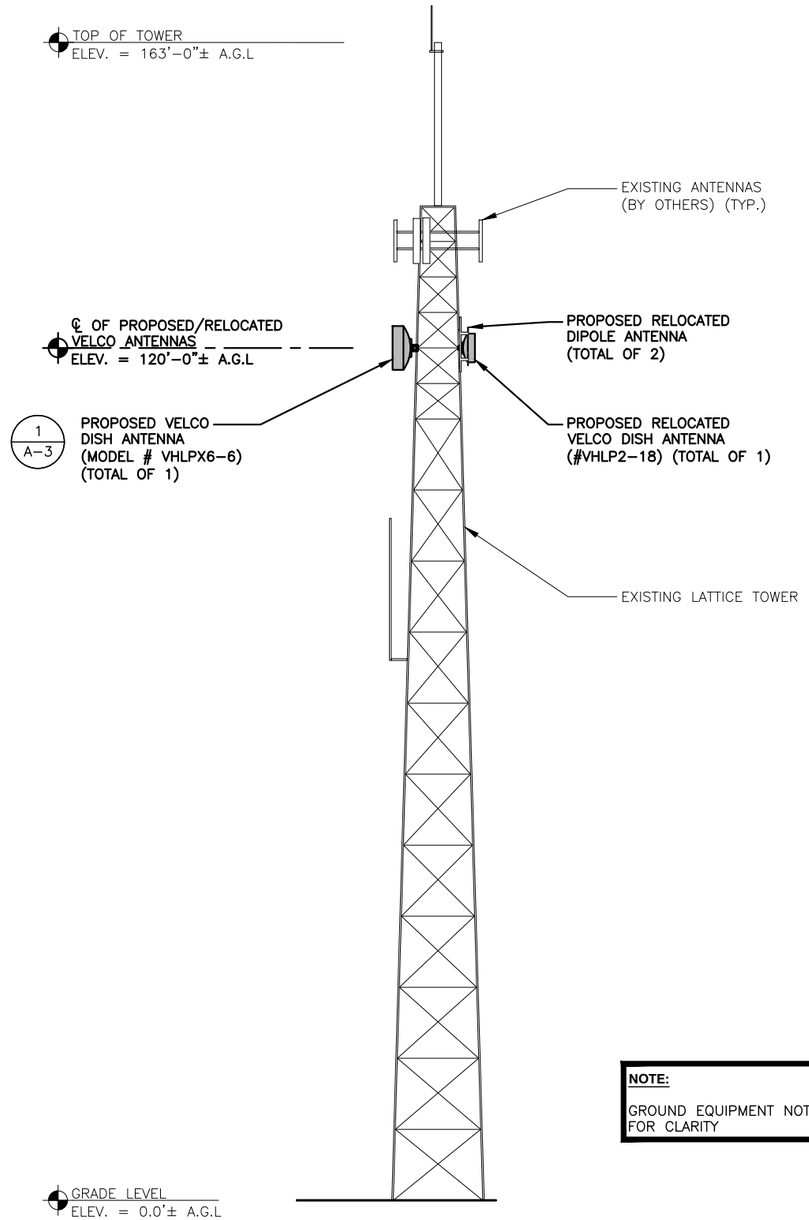

EAST ELEVATION (1 / A–2)
22x34 SCALE: 3/32"=1'–0"
11x17 SCALE: 3/64"=1'–0"

0 5'–0" 10'–0" 20'–0" 30'–0"

NOTE:
GROUND EQUIPMENT NOT SHOWN FOR CLARITY

STATE OF VERMONT
DEREK J. CREASER
NO. 80882
CIVIL
LICENSED PROFESSIONAL ENGINEER

HUDSON Design Group LLC
45 BEECHWOOD DRIVE
NORTH ANDOVER, MA 01845
TEL: (978) 557-5553
FAX: (978) 336-5586

VERMONT ELECTRIC POWER COMPANY, INC.
366 PINNACLE RIDGE ROAD
RUTLAND, VT 05701

SITE NUMBER:
SITE NAME: MIDDLEBURY - CHIPMAN HILL
717 SPRINGSIDE DR
MIDDLEBURY, VT 05753
ADDISON COUNTY

AIROSMITH DEVELOPMENT
AIROSMITH DEVELOPMENT INC.
125 HIGH ROCK AVENUE
SARATOGA SPRINGS, NY 12866

NO.	DATE	REVISIONS	BY	CHK	APPD
1	09/06/18	ISSUED FOR PERMITTING	SB	AT	DPH
A	08/28/18	ISSUED FOR REVIEW	SB	AT	DPH

SCALE: AS SHOWN | DESIGNED BY: AT | DRAWN BY: SB

VELCO
ELEVATIONS

JOB NUMBER	DRAWING NUMBER	REV
20	A–2	1

NOTE:

1. ALL VERTICAL TRANSMISSION LINE RUNS FROM THE ANTENNAS SHALL BE GROUNDED NEAR THE TOP AND BOTTOM OF THE TOWER (BEFORE THE CABLE MAKES HORIZONTAL TRANSITION AND NEAR THE ENTRY PORTS ON SHELTERS). ADDITIONAL TRANSMISSION LINE GROUND KITS SHALL BE INSTALLED AS NEEDED TO LIMIT THE DISTANCE BETWEEN GROUND KITS TO 75 FEET.
2. THE CONTRACTOR SHALL CONDUCT A SWEEP TEST ON ALL THE NEWLY INSTALLED TRANSMISSION LINES TO DETERMINE THE CABLE CONDUCTOR RESISTANCE, CABLE INSERTION LOSS, REFLECTION AND STIMULUS RESPONSE MEASUREMENTS.
3. DRIP LOOPS SHALL BE INCORPORATED IN CABLE RUNS TO PREVENT WATER FROM TRICKLING DOWN THE LINES INTO THE BUILDING.
4. ALL TRANSMISSION LINES SHALL BE MARKED WITH APPROPRIATE COLOR TAPE BANDS (ONE INCH WIDE COLOR TAPE) FOR IDENTIFICATION NEAR THE ANTENNA, JUST BEFORE ENTERING THE BUILDING AS WELL AS INSIDE THE BUILDING, BEFORE CONNECTION TO THE SURGE SUPPRESSERS. SEE EQUIPMENT AND COAXIAL CABLE SCHEDULE FOR COLOR CODING SCHEME.

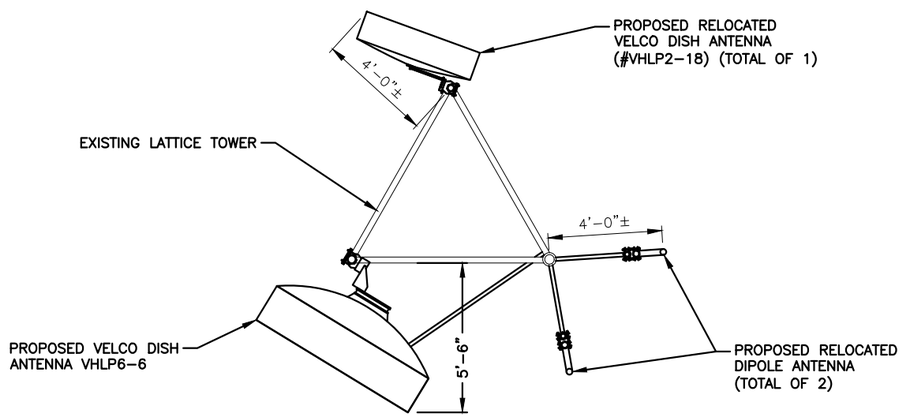

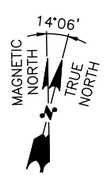

ANTENNA PLAN (1 / A-3)
SCALE: N.T.S

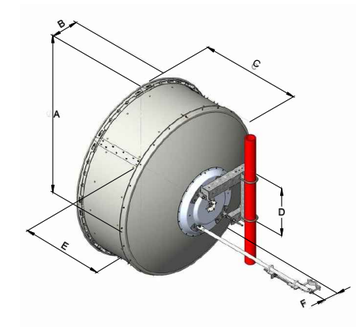

VHLP6-6 DIMENSION CHART						
ANTENNA SIZE. FT.	A	B	C	D	E	F
6'	74.8"	13.4"	47.5"	22.4"	39.4"	6.9"

ANTENNA DETAIL (2 / A-3)
SCALE: N.T.S

HUDSON Design Group LLC
45 BEECHWOOD DRIVE
NORTH ANDOVER, MA 01845
TEL: (978) 557-5553
FAX: (978) 336-5586

VERMONT ELECTRIC POWER COMPANY, INC. VELCO
366 PINNACLE RIDGE ROAD
RUTLAND, VT 05701

SITE NUMBER:
SITE NAME: MIDDLEBURY - CHIPMAN HILL
717 SPRINGSIDE DR
MIDDLEBURY, VT 05753
ADDISON COUNTY

AIROSMITH DEVELOPMENT
AIROSMITH DEVELOPMENT INC.
125 HIGH ROCK AVENUE
SARATOGA SPRINGS, NY 12866

NO.	DATE	REVISIONS	BY	CHK	APPD
1	09/06/18	ISSUED FOR PERMITTING	SB	AT	DPH
A	08/28/18	ISSUED FOR REVIEW	SB	AT	DPH

SCALE: AS SHOWN | DESIGNED BY: AT | DRAWN BY: SB

STATE OF VERMONT
DEREK J. CREASER
NO. 80882
CIVIL
LICENSED
PROFESSIONAL ENGINEER

VELCO
DETAILS

JOB NUMBER	DRAWING NUMBER	REV
20	A-3	1

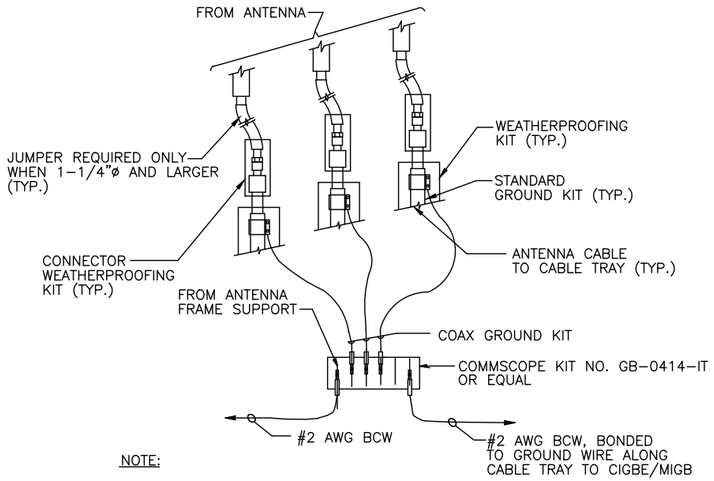

NOTE:

1. DO NOT INSTALL CABLE GROUND KIT AT A BEND AND ALWAYS DIRECT GROUND WIRE DOWN TO CIGBE.

GROUND WIRE TO GROUND BAR CONNECTION DETAIL (1 / G-1)

SCALE: N.T.S

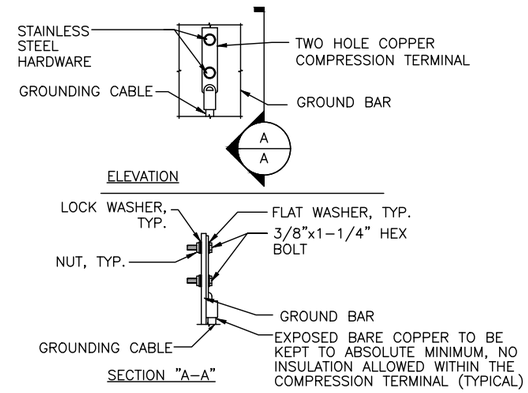

NOTE:

1. "DOUBLING UP" OR "STACKING" OF CONNECTION IS NOT PERMITTED.
2. OXIDE INHIBITING COMPOUND TO BE USED AT ALL LOCATION.
3. CADWELD DOWNLEADS FROM UPPER EGB, LOWER EGB, AND MGB

TYPICAL GROUND BAR CONNECTION DETAIL (3 / G-1)

SCALE: N.T.S

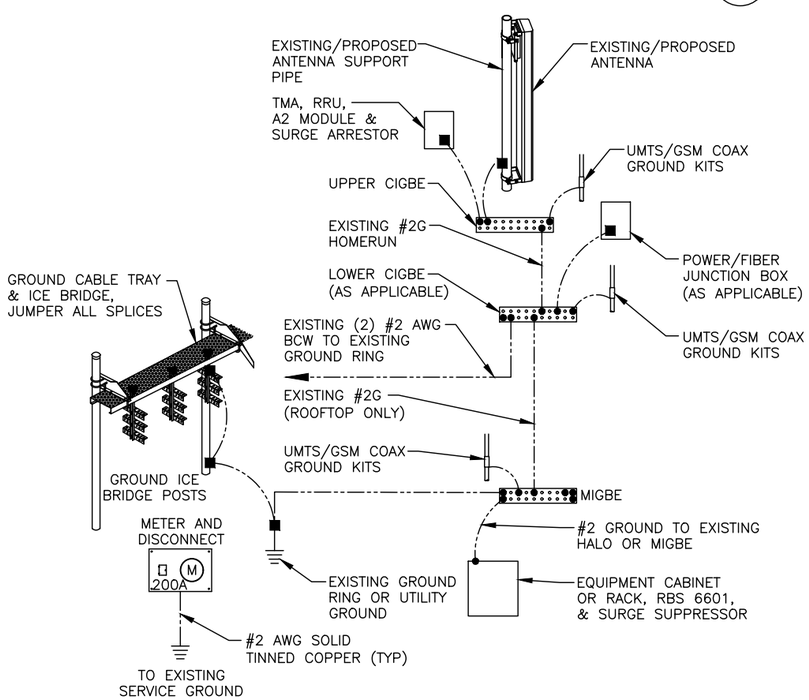

GROUNDING RISER DIAGRAM (2 / G-1)

SCALE: N.T.S

EACH GROUND CONDUCTOR TERMINATING ON ANY GROUND BAR SHALL HAVE AN IDENTIFICATION TAG ATTACHED AT EACH END THAT WILL IDENTIFY ITS ORIGIN AND DESTINATION.

SECTION "P" – SURGE PRODUCERS

CABLE ENTRY PORTS (HATCH PLATES) (#2)
GENERATOR FRAMEWORK (IF AVAILABLE) (#2)
TELCO GROUND BAR
COMMERCIAL POWER COMMON NEUTRAL/GROUND BOND (#2)
+24V POWER SUPPLY RETURN BAR (#2)
–48V POWER SUPPLY RETURN BAR (#2)
RECTIFIER FRAMES.

SECTION "A" – SURGE ABSORBERS

INTERIOR GROUND RING (#2)
EXTERNAL EARTH GROUND FIELD (BURIED GROUND RING) (#2)
METALLIC COLD WATER PIPE (IF AVAILABLE) (#2)
BUILDING STEEL (IF AVAILABLE) (#2)

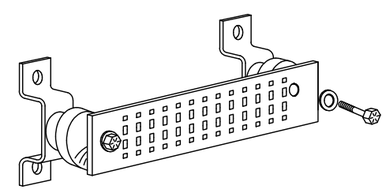

GROUND BAR - DETAIL (4 / G-1)

SCALE: N.T.S

STATE OF VERMONT
DEREK J. CREASER
NO. 80882
CIVIL
LICENSED
PROFESSIONAL ENGINEER

HUDSON Design Group LLC
45 BEECHWOOD DRIVE
NORTH ANDOVER, MA 01845
TEL: (978) 557-5553
FAX: (978) 336-5586

VERMONT ELECTRIC POWER COMPANY, INC. (VELCO)
366 PINNACLE RIDGE ROAD
RUTLAND, VT 05701

SITE NUMBER:
SITE NAME: MIDDLEBURY - CHIPMAN HILL
717 SPRINGSIDE DR
MIDDLEBURY, VT 05753
ADDISON COUNTY

AIROSMITH DEVELOPMENT INC.
125 HIGH ROCK AVENUE
SARATOGA SPRINGS, NY 12866

NO.	DATE	REVISIONS	BY	CHK	APPD
1	09/06/18	ISSUED FOR PERMITTING	SB	AT	DPH
A	08/28/18	ISSUED FOR REVIEW	SB	AT	DPH

SCALE: AS SHOWN | DESIGNED BY: AT | DRAWN BY: SB

VELCO

GROUNDING DETAILS

JOB NUMBER	DRAWING NUMBER	REV
20	G-1	1