| | |
|---|---|
| 1st Reading: | 05/09/2022 |
| 2nd Reading: | 05/31/2022 |
| Date Adopted: | 05/09/2022 |
| Date Published: | 06/10/2022 & 06/17/2022 |
| Effective Date: | 07/07/2022 |

**ORDINANCE #297**

AN ORDINANCE OF THE CITY OF CROOKS, SD, ADOPTING THE 2021 *INTERNATIONAL RESIDENTIAL CODE* AND AMENDMENTS THERETO.

BE IT ORDAINED BY THE CITY OF CROOKS, SD:

*Section 1. That Section of the Code of Ordinances of CROOKS, SD, is hereby amended to read:*

**ADOPTED.**

(a) The *International Residential Code*, 2021 edition, including Appendix AE, Appendix AG, Appendix AH, and Appendix AQ as published by the International Code Council Inc. as amended, is hereby adopted as the residential building code by the city for regulating the design, construction, quality of materials, erection, installation, alteration, movement, repair, equipment, use and occupancy, location, removal, and demolition of detached one- and two-family dwellings and town houses not more than three stories in height with a separate means of egress and their accessory structures not more than three stories in height, and provides for the issuance of permits and the collection of fees therefor.

(b) The adoption of the *International Residential Code*, 2021 edition, will become effective JULY 1, 2022. The minimum building standards in the 2021 edition of the *International Residential Code* and amendments thereto shall be applied to any building permit issued after JUNE 30, 2021.

(c) The city shall publish this ordinance, without attachments, after its passage. The attachments are on file and available for inspection at the office of the city clerk.

*Section 2. That Section of the Code of Ordinances of CROOKS, SD, is hereby amended to read:*

**AMENDMENTS, ADDITIONS, AND DELETIONS TO THE 2021 *INTERNATIONAL RESIDENTIAL CODE.***

The following sections and subsections of the 2021 *International Residential Code* adopted in this subchapter shall be amended, added, or not adopted by the city as follows. All other sections or subsections of the 2021 *International Residential Code* as published shall remain the same.

**R101.1 Title.** These provisions shall be known as the residential code for one- and two-family dwellings of the city of Cooks and shall be cited as such and will be referred to herein as "this code."

**R101.2 Scope.** The provisions of this code shall apply to the construction, alteration, movement, enlargement, replacement, repair, equipment, use and occupancy, location, removal, and demolition of detached one- and two-family dwellings and town houses not more than three stories above grade plane in height with a separate means of egress and their accessory structures not more than three stories above grade plane in height.

**Exception 1:** The following shall be permitted to be constructed in accordance with this code were provided with an automatic sprinkler system complying with Section P2904:

1. A care facility with five or fewer persons receiving custodial care within a dwelling unit.

2. A care facility with five or fewer persons receiving medical care within a dwelling unit.

3. A care facility for five or fewer persons receiving care that are within a single-family dwelling.

**Exception 2:** The following shall be permitted to be constructed in accordance with this code. A fire sprinkler system if installed may be in accordance with Section P2904.

1. Live/work units located in town houses and complying with the requirements of Section 419 of the *International Building Code*.

2 Owner-occupied lodging houses with five or fewer guestrooms.

**Exception 3:** Existing buildings undergoing repair, alteration or additions, and change of occupancies may be permitted to comply with the *International Existing Building Code*.

**R103.1 Creation of enforcement agency.** Building services is hereby created and the official in charge thereof shall be known as the building official.

**R103.2 Appointment.** Adopted by the city of Crooks.

**R104.8 Liability.** The building official, member of the board of appeals, or employee charged with the enforcement of this code, while acting for the jurisdiction in good faith and without malice in the discharge of the duties required by this code or other pertinent law or ordinance, shall not thereby be rendered civilly or criminally liable personally and is hereby relieved from personal liability for any damage accruing to persons or property as a result of any act or by reason of an act or omission in the discharge of official duties.

This code shall not be construed to relieve from or lessen the responsibility of any person owning, operating, or controlling any building or structure for any damages to persons or property caused by defects, nor shall the code enforcement agency or the city be held as assuming any such liability by reason of the inspection authorized by this code or any permits or certificates issued under this code.

**R104.8.1 Legal defense.** Any suit or criminal complaint instituted against an officer or employee because of an act performed by that officer or employee in the lawful discharge of duties and under the provisions of this code shall be afforded all the protection provided by the city's insurance pool and any immunities and defenses provided by other applicable state and federal law and defended by legal representatives of the jurisdiction until the final termination of the proceedings. The building official or any subordinate shall not be liable for cost in any action, suit, or proceeding that is instituted in pursuance of the provisions of this code.

**R105.1 Required.** Any owner or owner's authorized agent who intends to construct, enlarge, alter, repair, move, demolish, or change the occupancy of a building or structure, or to erect, install, enlarge, alter, repair, remove, convert, or replace any electrical, gas, mechanical, or plumbing system, the installation of which is regulated by this code, or to cause any such work to be performed, shall first make application to the building official and obtain the required permit. The building official may exempt permits for minor work.

Exclusive of a homeowner, no person or firm shall be issued a building permit for residential building defined as owner-occupied one- and two-family dwellings, including accessory garages, until that person or firm has been issued a residential contractor's license required by this chapter.

**R105.2 Work exempt from permit.** Exemption from permit requirements of this code shall not be deemed to grant authorization for any work to be done in any manner in violation of the provisions of this code or any other laws or ordinances of this jurisdiction. Permits shall not be required for the following:

**Building:**

1. Other than storm shelters, one-story detached accessory structures, provided that the floor area does not exceed 200 square feet (18.58 $m^2$). A placement permit is required by the zoning division.

2. Fences not over 7 feet (2,134 mm) high. A fence permit is required by the zoning division.

3. Retaining walls that are not over 4 feet (1,219 mm) in height measured from the bottom of the grade elevation to the top of the wall, unless supporting a surcharge.

4. Water tanks supported directly upon grade if the capacity does not exceed 5,000 gallons (18,927 L) and the ratio of height to diameter or width does not exceed 2 to 1.

5. Sidewalks and driveways. A driveway permit is required by the zoning division. A sidewalk permit is required by the engineering division.

6. Painting, papering, tiling, carpeting, cabinets, countertops, and similar finish work.

7. Prefabricated swimming pools that are less than 24 inches 610 mm) deep.

8. Swings and other playground equipment.

9. Window awnings supported by an exterior wall that do not project more than 54 inches (1,372 mm) from the exterior wall and do not require additional support.

**Electrical:**

1. Listed cord-and-plug connected temporary decorative lighting.

2. Reinstallation of attachment plug receptacles but not the outlets therefor.

3. Replacement of branch circuit overcurrent devices of the required capacity in the same location.

4. Electrical wiring, devices, appliances, apparatus, or equipment operating at less than 25 volts and not capable of supplying more than 50 watts of energy.

5. Minor repair work, including the replacement of lamps or the connection of approved portable electrical equipment to approved permanently installed receptacles.

**Gas:**

1. Portable heating, cooking, or clothes drying appliances.

2. Replacement of any minor part that does not alter approval of equipment or make such equipment unsafe.

3. Portable-fuel-cell appliances that are not connected to a fixed piping system and are not interconnected to a power grid.

**Mechanical:**

1. Portable heating appliances.

2. Portable ventilation appliances.

3. Portable cooling units.

4. Steam, hot- or chilled-water piping within any heating or cooling equipment regulated by this code.

5. Replacement of any minor part that does not alter approval of equipment or make such equipment unsafe.

6. Portable evaporative coolers.

7. Self-contained refrigeration systems containing 10 pounds (4.54 kg) or less of refrigerant or that are actuated by motors of 1 horsepower (746 W) or less.

8. Portable-fuel-cell appliances that are not connected to a fixed piping system and are not interconnected to a power grid.

**Plumbing:**

1. The stopping of leaks in drains, water, soil, waste or vent pipe; provided, however, that if any concealed trap, drainpipe, water, soil, waste or vent pipe becomes defective and it becomes necessary to remove and replace the same with new material, such work shall be considered as new work and a permit shall be obtained and inspection made as provided in this code.

2. The clearing of stoppages or the repairing of leaks in pipes, valves, or fixtures, and the removal and reinstallation of water closets, provided such repairs do not involve or require the replacement or rearrangement of valves, pipes, or fixtures.

**R106.1 Submittal documents.** Submittal documents consisting of construction documents and other data shall be submitted with each application for a permit. The construction documents shall be prepared by a registered design professional where required by the statutes of the jurisdiction in which the project is to be constructed. Where special conditions exist, the building official is authorized to require additional construction documents to be prepared by a registered design professional.

> **Exception:** The building official is authorized to waive the submission of construction documents and other data not required to be prepared by a registered design professional if it is found that the nature of the work applied for is such that reviewing of construction documents is not necessary to obtain compliance with this code.

**R106.1.6 Energy efficiency.** Construction documents for detached one- and two-family dwellings and townhomes shall be provided with the intended R-value for the ceilings, walls, floors, basement walls (if finished), slab perimeter R-value and depth, and crawl space walls.

**R106.1.7 Foundation reinforcement.** Construction for detached one- and two-family dwellings and town houses shall be provided with the intended reinforcement of foundation walls referenced in Tables R404.1.1(2), R404.1.1(3), and R404.1.1(4) for reinforced masonry foundation walls; Tables R404.1.2(2), R404.1.2(3), R404.1.2(4), and R404.1.1(8) for flat concrete foundation walls; Tables 404.1.2(5) and R404.1.2(6) for waffle-grid basement walls; and Table R404.1.2(7) for screed-grid basement walls where the foundation wall exceeds the provisions for plain masonry and concrete foundation walls.

**R106.2 Site plan or plot plan.** The construction documents submitted with the application for permit shall be accompanied by a site plan showing the size and location of new construction and existing structures on the site and distances from lot lines. Site plans for new dwellings are required to specify the corner pin elevations and the minimum ground elevation (MGE) which designates the elevation of the top of the black dirt under the grass, or the top of the landscape rock or other landscape material at the lowest exposed part of the house. In the case of demolition, the site plan shall show construction to be demolished and the location and size of existing structures and construction that are to remain on the site or plot. The building official is authorized to waive or modify the requirement for a site plan where the application for permit is for alteration or repair or where otherwise warranted.

**R106.3.1 Approval of construction documents.** Where the building official issues a permit, the construction documents shall be approved. One set of construction documents so reviewed shall be retained by the building official.

**R108.2 Schedule of permit fees.** On buildings, structures, electrical, gas, mechanical, and plumbing systems or alterations requiring a permit, a fee for each permit shall be paid as required in accordance with the schedule as established by the city.

The fee for each residential building permit shall be set forth in a resolution

**R108.6 Work commencing before permit issuance.** Any person who commences work requiring a permit on a building, structure, electrical, gas, mechanical, or plumbing system before obtaining the necessary permits shall be subject to a fee established by the applicable governing authority that shall be in addition to the required permit fees. Administrative citations and legal and/or civil proceedings may also be commenced.

**R108.7 Delinquent accounts.** The administrative authority may refuse to issue permits or conduct inspections for any person or business whose account is delinquent.

**R109.1.1 Footing inspection.** Inspection of the footing shall be made after poles or piers are set or trenches or basement areas are excavated and any required forms erected and any required reinforcing steel (minimum of two number 4s) is in place and supported prior to the placing of concrete. The footing inspection shall include excavations for thickened slabs intended for the support of bearing walls, partitions, structural supports, or equipment and special requirements for wood foundations.

**R109.1.3 Floodplain inspections.** Not adopted by the city of Crooks.

**R109.1.6.1 Elevation documentation.** If located in a flood hazard area, the documentation of elevations required in Chapter 156, Floodplain Management, shall be submitted to the floodplain administrator or his designated official prior to the final inspection.

**R110.1 Use and change of occupancy.** A building or structure shall not be used or occupied in whole or part, and a change of occupancy or change of use of a building or structure or portion thereof shall not be made, until the building official has issued a certificate of occupancy therefor as provided herein and final inspections have been obtained from the electrical, mechanical, plumbing, and building inspection divisions of building services. An inspection placard shall be posted on the electrical panel, which is signed after final inspections have occurred by the electrical inspector, mechanical inspector, and plumbing inspector for new one- and two-family dwelling units and multiple single-family dwellings (town houses). Issuance of a certificate of occupancy shall not be construed as an approval of a violation of the provisions of this code or of other ordinances of the city. Certificates presuming to give authority to violate or cancel the provisions of this code or other ordinances of the city shall not be valid.

**Exceptions:**

1. Certificates of occupancy are not required for work exempt from permits under Section R105.2.

2. Accessory buildings or structures.

**R110.6 Placards.** Placards or inspection record tags placed on the job by the inspectors to indicate approval of the work inspected shall not be removed, except when authorized by the building official.

**R112.1 General.** In order to hear and decide appeals of orders, decisions, or determinations made by the building official relative to the application and interpretation of this code, to review all proposed changes to the respective codes and to submit recommendations to the responsible official and the city council, to review requests for house moves, to examine applicants for licensing, and to investigate matters brought before the board, there shall be and is hereby created a building board of appeals and examiners. The building official shall be an ex officio member of said board but shall not have a vote on any matter before the board. Members shall be appointed by the mayor with the consent of the council and shall hold office for a term of three years. The board shall adopt rules of procedure for conducting its business and shall render decisions and findings in writing to the appellant with a duplicate copy to the building official and/or the fire marshal.

The board, in exercising its authority over house moving, may deny the building request or may require additional stipulations to be placed on the building permit to address the protection of the property values and neighborhood compatibility.

**R112.2 Limitations on authority.** An application for appeal shall be based on a claim that the true intent of this code or the rules legally adopted thereunder have been incorrectly interpreted, the provisions of this code do not fully apply, or an equally good or better form of construction is proposed. The board shall not have authority relative to the interpretation of the administrative provisions of this code nor shall the board be empowered to waive requirements of this code.

**R113.3 Prosecution of violation.** If the notice of violation is not complied with in the time prescribed by such notice, the building official is authorized to request the legal counsel of the jurisdiction to deem the violation as a strict liability offense and institute the appropriate proceeding at law or in equity to restrain, correct, or abate such violation, or to require the

removal or termination of the unlawful occupancy of the building or structure in violation of the provisions of this code or of the order or direction made pursuant thereto

**Section R202. Definitions.** Add the following definition.

**STRICT LIABILITY OFFENSE.** An offense in which the prosecution in a legal proceeding is not required to prove criminal intent as a part of its case. It is enough to prove that the defendant either did an act which was prohibited or failed to do an act which the defendant was legally required to do.

**Table R301.2**
**Climatic and Geographic Design Criteria**

| GROUND SNOW Load | WIND DESIGN | | | | SEISMIC DESIGN Category | SUBJECT TO DAMAGE FROM | | | ICE BARRIER UNDERLAYMENT Required | FLOOD Hazards | AIR FREEZING Index | MEAN ANNUAL Temp[e] |
|---|---|---|---|---|---|---|---|---|---|---|---|---|
| | Speed (mph) | Topographic effects | Special wind region | Wind-borne debris zone[m] | | Weathering | Frost line depth | Termite | | | | |
| 40 psf | 112 | No | No | No | A | Severe | 42 inches (1067 mm) | Slight to moderate | Yes | CROOKS entered the regular phase of the National Flood Insurance Program on September 17, 1979. | 3,000 | 46 degrees F |

**Manual J Design Criteria**

| Elevation | Altitude correction factor | Coincident wet bulb | Indoor winter design dry-bulb temperature | Indoor winter design dry-bulb temperature | Outdoor winter design dry-bulb temperature | Heating temperature difference |
|---|---|---|---|---|---|---|
| 1418 | 0.95 | 72 degrees F | 70 degrees F | 70 degrees F | -11 degrees F | 81 degrees F |
| **Latitude** | **Daily range** | **Indoor summer design relative humidity** | **Indoor summer design relative humidity** | **Indoor summer design dry-bulb temperature** | **Outdoor summer design dry-bulb temperature** | **Cooling temperature difference** |
| 43 degrees north | M | 50% relative humidity | 50% relative humidity | 75 degrees F | 90 degrees F | 15 degrees F |

For SI: 1 pound per square foot = 0.0479 kPa, 1 mile per hour = 0.447 m/s.

a. Where weathering requires a higher strength concrete or grade of masonry than necessary to satisfy the structural requirements of this code, the frost line depth strength required for weathering shall govern. The weathering column shall be filled in with the weathering index, "negligible," "moderate," or "severe" for concrete as determined from Figure R301.2(1). The grade of masonry units shall be determined from ASTM C34, ASTM C55, ASTM C62, ASTM C73, ASTM C90, ASTM C129, ASTM C145, ASTM C216, or ASTM C652.

b. Where the frost line depth requires deeper footings than indicated in Figure R403.1(1), the frost line depth strength required for weathering shall govern. The jurisdiction shall fill in the frost line depth column with the minimum depth of footing below finish grade.

c. The jurisdiction shall fill in this part of the table to indicate the need for protection depending on whether there has been a history of local subterranean termite damage.

d. The jurisdiction shall fill in this part of the table with the wind speed from the basic wind speed map [Figure R301.2(2)]. Wind exposure category shall be determined on a site-specific basis in accordance with Section R301.2.1.4.

e. The jurisdiction shall fill in this section of the table to establish the design criteria using Table 10A from ACCA Manual J or established criteria determined by the jurisdiction.

f. The jurisdiction shall fill in this part of the table with the seismic design category determined from Section R301.2.2.1.

g. The jurisdiction shall fill in this part of the table with the date of the jurisdiction's entry into the National Flood Insurance Program (date of adoption of the first code or ordinance for management of flood hazard areas); and the title and date of the currently effective Flood Insurance Study or other flood hazard study.

h. In accordance with Sections R905.1.2, R905.4.3.1, R905.5.3.1, R905.6.3.1, R905.7.3.1, and R905.8.3.1, where there has been a history of local damage from the effects of ice damming, the jurisdiction shall fill in this part of the table with "YES." Otherwise, the jurisdiction shall fill in this part of the table with "NO."

i. The jurisdiction shall fill in this part of the table with the 100-year return period air freezing index (BF-days) from Figure R403.3(2) or from the 100-year (99 percent) value on the National Climatic Data Center data table "Air Freezing Index-USA Method (Base 32°F)."

j. The jurisdiction shall fill in this part of the table with the mean annual temperature from the National Climatic Data Center data table "Air Freezing Index-USA Method (Base 32°F)."

k. In accordance with Section R301.2.1.5, where there is local historical data documenting structural damage to buildings due to topographic wind speed-up effects, the jurisdiction shall fill in this part of the table with "YES." Otherwise, the jurisdiction shall indicate "NO" in this part of the table.

l. In accordance with Figure R301.2(2), where there is local historical data documenting unusual wind conditions, the jurisdiction shall fill in this part of the table with "YES" and identify any specific requirements. Otherwise, the jurisdiction shall indicate "NO" in this part of the table.

m. In accordance with Section R301.2.1.2 the jurisdiction shall indicate the wind-borne debris wind zone(s). Otherwise, the jurisdiction shall indicate "NO" in this part of the table.

n. The jurisdiction shall fill in these sections of the table to establish the design criteria using Table 1a or 1b from ACCA Manual J or established criteria determined by the jurisdiction.

o. The jurisdiction shall fill in this section of the table using the Ground Snow Loads in Figures R301.2(3) and R301.2(4).

**Table R301.5**
**Minimum Uniformly Distributed Live Loads**
**(in pounds per square foot)**

| Use | Uniform Load (psf) | Concentrated Load (lb) |
|---|---|---|
| Uninhabitable attics without storage [b] | 10 | — |
| Uninhabitable attics with limited storage [b, g] | 20 | — |
| Habitable attics and attics served with fixed stairs | 30 | — |
| Balconies (exterior) and decks [e] | 40 | — |
| Fire escapes | 40 | — |
| Guards | — | 200[h, i] |
| Guardrails in-fill components [f] | | 50[h] |

| | | |
|---|---|---|
| Handrail | 200h | — |
| Passenger vehicle garages [a] | 50 [a] | 2,000[h] |
| Rooms | 40 | — |
| Stairs | 40[c] | 300[c] |

For SI: 1 inch = 25.4 mm, 1 pound per square foot = 0.0479 kPa, 1 square inch = 645 $mm^2$, 1 pound = 4.45 N.

a. Elevated garage floors shall be capable of supporting the uniformly distributed live load or a 2,000-pound concentrated load applied on an area of 4 1/2 inches by 4 1/2 inches, whichever produces the greater stresses.

b. Uninhabitable attics without storage are those where the clear height between joists and rafters is not more than 42 inches, or where there are not two or more adjacent trusses with web configurations capable of accommodating an assumed rectangle 42 inches in height by 24 inches in width, or greater, within the plane of the trusses. This live load need not be assumed to act concurrently with any other live load requirements.

c. Individual stair treads shall be capable of supporting the uniformly distributed live load or a 300-pound concentrated load applied on an area of 2 inches by 2 inches, whichever produces the greater stresses.

d. A single concentrated load applied in any direction at any point along the top. For a guard not required to serve as a handrail, the load need not be applied to the top element of the guard in a direction parallel to such element.

e. See Section R507.1 for decks attached to exterior walls.

f. Guard in-fill components (all those except the handrail), balusters, and panel fillers shall be designed to withstand a horizontally applied normal load of 50 pounds on an area equal to 1 square foot. This load need not be assumed to act concurrently with any other live load requirement.

g. Uninhabitable attics with limited storage are those where the clear height between joists and rafters is 42 inches or greater, or where there are two or more adjacent trusses with web configurations capable of accommodating an assumed rectangle 42 inches in height by 24 inches in width, or greater, within the plane of the trusses.

   The live load need only be applied to those portions of the joists or truss bottom chords where all of the following conditions are met:

   1. The attic area is accessed from an opening not less than 20 inches in width by 30 inches in length that is located where the clear height in the attic is not less than 30 inches.
   2. The slopes of the joists or truss bottom chords are no greater than 2 inches vertical in 12 units horizontal.
   3. Required insulation depth is less than the joist or truss bottom chord member depth.

   The remaining portions of the joists or truss bottom chords shall be designed for a uniformly distributed concurrent live load of not less than 10 pounds per square foot.

h. Glazing used in handrail assemblies and guards shall be designed with a load adjustment factor of 4. The load adjustment factor shall be applied to each of the concentrated loads applied to the top of the rail, and to the load on the in-fill components. These loads shall be determined independent of one another, and loads are assumed not to occur with any other live load.

i. Where the top of a guard system is not required to serve as a handrail, the single concentrated load shall be applied at any point along the top in the vertical downward direction and in the horizontal direction away from the walking surface. Where the top of a guard is also serving as the handrail, a single concentrated load shall be applied in any direction at any point along the top. Concentrated loads shall not be applied concurrently.

**Table R302.1(1)**
**Exterior Walls**

| Exterior Wall Element | | Minimum Fire-Resistance Rating | Minimum Fire Separation Distance |
|---|---|---|---|
| Walls | (Fire-resistance rated) | 1 hour – tested in accordance with ASTM E 119 or UL 263 or Section 703.3 of the *International Building Code* with exposure from both sides | 0 feet |
| | (Not fire-resistance rated) | 0 hours | ≥ 5 feet |
| Projections | Not allowed | N/A | < 2 feet |
| | (Fire-resistance rated) | 1 hour on the underside, or heavy timber or fire-retardant treated wood[b] | ≥ 2 to < 3 feet |
| | (Not fire-resistance rated) | 0 hours | ≥ 3 feet |
| Openings | Not allowed | N/A | < 3 feet |
| | 25% Maximum of wall area | 0 hours | 3 feet |
| | Unlimited | 0 hours | 5 feet |
| Penetrations | All | Comply with Section R302.4 | < 3 feet |
| | | None required | 3 feet |

For SI: 1 foot = 304.8 mm.

NA = Not Applicable.

a. The fire-resistance rating shall be permitted to be reduced to 0 hours on the underside of the eave overhang if fire blocking is provided from the wall top plate to the underside of the roof sheathing.

b. The fire-resistance rating shall be permitted to be reduced to 0 hours on the underside of the rake overhang where gable vent openings are not installed.

**R302.2.2 Common walls.** Common walls separating town house units shall be assigned a fire-resistance rating in accordance with Item 1 or 2 and shall be rated for fire exposure from both sides. Common walls shall extend to and be tight against the exterior sheathing of the exterior walls, or the inside face of exterior walls without stud cavities, and the underside of the roof sheathing. The common wall shared by two town house units shall be constructed without mechanical equipment, ducts, or vents, other than water-filled fire sprinkler piping in the cavity of the common wall. Electrical installations shall be in accordance with the *National Electric Code*. Penetrations of the membrane of common walls for electrical outlet boxes shall be in accordance with Section R302.4. Plumbing installations shall be in accordance with the *Uniform Plumbing Code*. Membrane or through penetrations of common walls for plumbing systems shall be in accordance with Section 302.4.

1. Where an automatic sprinkler system in accordance with Section P2904 is provided, the common wall shall be not less than a 1-hour fire-resistance-rated wall assembly tested in accordance with ASTM E119, UL 263, or Section 703.3.2.2 of the *International Building Code*.

2. Where an automatic sprinkler system in accordance with Section P2904 is not provided, the common wall shall be not less than a 2-hour fire-resistance-rated wall assembly tested in accordance with ASTM E119, UL 263, or Section 703.3.2.2 of the *International Building Code*.

   **Exception:** Common walls are permitted to extend to and be tight against the inside of the exterior walls if the cavity between the end of the common wall and the exterior sheathing is filled with a minimum of two 2-inch nominal thickness wood studs.

**R302.2.3 Continuity.** The fire-resistance-rated wall or assembly separating town house units shall be continuous from the foundation to the underside of the roof sheathing, deck, or slab. The fire-resistance rating shall extend the full length of the wall or assembly, including wall extensions through and separating attached enclosed accessory structures.

Exterior walls that extend beyond an adjacent structure that has a fire separation distance less than 5 feet (1,523 mm) to a common property line shall have not less than a one-hour fire rating with exposure from both sides with no openings allowed therein.

Projections such as a deck that have a fire separation distance of less than 3 feet (914 mm) to a common property line shall have a 1-hour fire rating with exposure from both sides with no openings allowed therein that extends at least 30 inches (762 mm) above the projection.

**R302.3 Two-family dwellings.** *Dwelling units* in two-family dwellings shall be separated from each other by wall and floor assemblies having not less than a 1-hour fire-resistance rating where

tested in accordance with ASTM E119, UL 263, or Section 703.2.2 of the *International Building Code*. Such separation shall be provided regardless of whether a *lot line* exists between the two *dwelling units* or not. Fire-resistance-rated floor/ceiling and wall assemblies shall extend to and be tight against the exterior wall, and wall assemblies shall extend from the foundation to the underside of the roof sheathing.

**Exception:** A fire-resistance rating of 1/2 hour shall be permitted in buildings equipped throughout with an automatic sprinkler system installed in accordance with Section P2904.

**R302.13 Fire protection of floors.** Not adopted by the city.

**R303.5.1 Intake openings.** Mechanical and gravity outdoor air intake openings shall be located not less than 10 feet (3,048 mm) from any hazardous or noxious contaminant, such as vents, chimneys, plumbing vents, streets, alleys, parking lots, and loading docks.

For the purpose of this section, the exhaust from dwelling unit toilet rooms, bathrooms, and kitchens shall not be considered as hazardous or noxious.

**Exceptions:**

1. The 10-foot (3,048 mm) separation is not required where the intake opening is located 3 feet (914 mm) or greater below the contaminant source.

2. Vents and chimneys serving fuel-burning appliances shall be terminated in accordance with the applicable provisions of Chapters 18 and 24.

3. Clothes dryer exhaust ducts shall be terminated in accordance with Section M1502.3.

4. For equipment replacements on existing structures, gravity outdoor intake openings for combustion air shall be located a minimum of 3 feet (914 mm) from any hazardous or noxious contaminant.

**R307.1 Space required.** Fixtures shall be spaced in accordance with Figure R307.1.

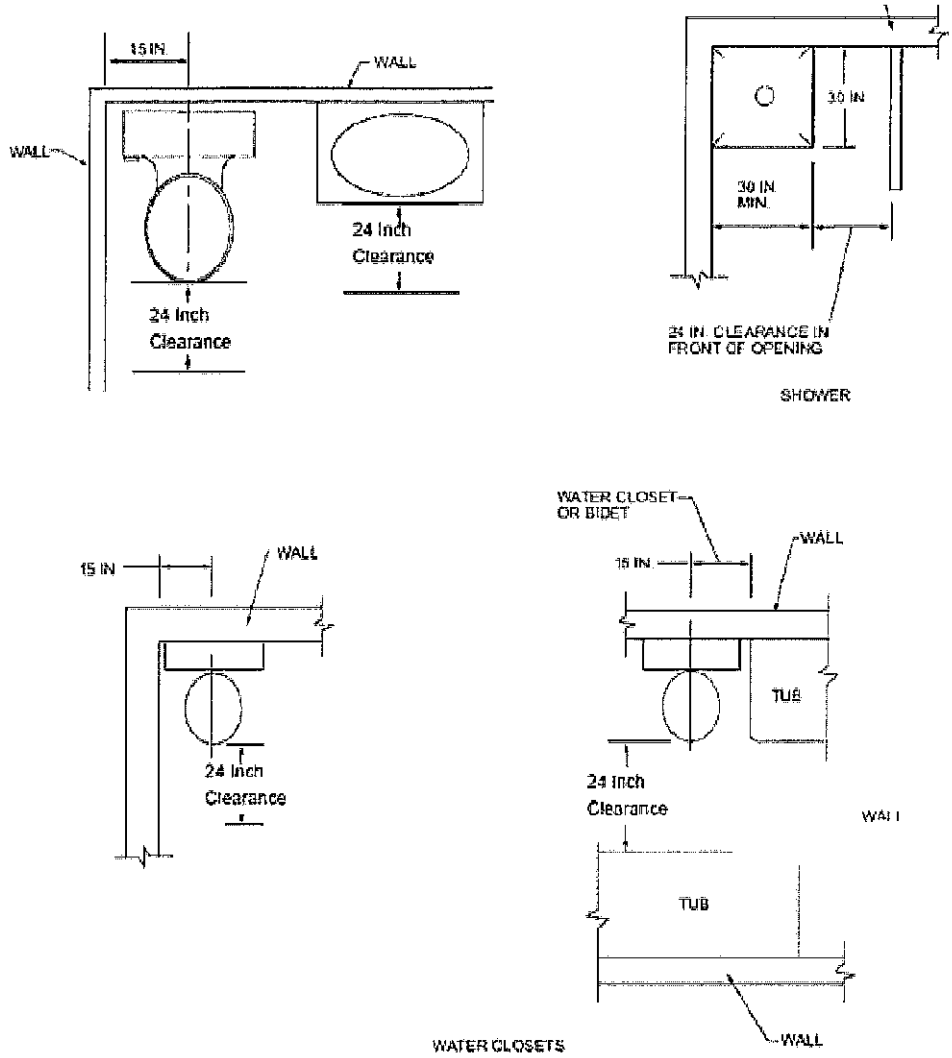


For SI: 1 inch = 25.4 mm.

**FIGURE R307.1**
**MINIMUM FIXTURE CLEARANCES**

**R308.4.2 Glazing adjacent to doors.** Glazing in an individual fixed or operable panel adjacent to a door shall be considered to be a hazardous location where the bottom exposed edge of the glazing is less than 60 inches (1524 mm) above the floor or walking surface and it meets either of the following conditions:

1. Where the glazing is within 24 inches (610 mm) of either side of the door in the plane of the door in a closed position.

2. Where the glazing is on a wall perpendicular to the plane of the door in a closed position and within 24 inches (610 mm) of the hinge side of an in-swinging door.

**Exceptions:**

1. Decorative glazing.

2. Where there is an intervening wall or other permanent barrier between the door and the glazing.

3. Where access through the door is to a closet or storage area 3 feet (914 mm) or less in depth. Glazing in this application shall comply with Section R308.4.3.

4. Glazing that is adjacent to the fixed panel of patio doors.

**R309.5 Fire sprinklers.** Not adopted by the city.

**R310.2.1 Minimum size.** Emergency and escape rescue openings shall have a net clear opening of not less than 5.0 square feet (0.465 $m^2$).

**R310.2.3 Maximum height from floor.** Emergency escape and rescue openings shall have the bottom of the clear opening not greater than 48 inches (1,219 mm) above the floor.

**R310.4.2 Ladder and steps.** Area wells with a vertical depth greater than 48 inches (1,219 mm) shall be equipped with a permanently affixed ladder or steps. The ladder or steps shall not be obstructed by the emergency escape and rescue opening where the window or door is in the open position. Ladders or steps required by this section shall not be required to comply with Section R311.7..

**R311.3.1 Floor elevations at the required egress doors.** Landings or finished floors at the required egress door shall be not more than 1 1/2 inches (38 mm) lower than the top of the threshold.

> **Exception:** The landing or floor on the exterior side shall be not more than 8 inches (202 mm) below the top of the threshold, provided the door does not swing over the landing or floor.

Where exterior landings or floors serving the required egress door are not at grade, they shall be provided with access to grade by means of a ramp in accordance with Section R311.8 or a stairway in accordance with Section R311.7.

**R311.3.2 Floor elevations for other exterior doors.** Doors other than the required egress door shall be provided with landings or floors not more than 8 inches (202 mm) below the top of the threshold.

> **Exception:** A top landing is not required where a stairway of not more than two risers is located on the exterior side of the door, provided that the door does not swing over the stairway.

**R311.7.5.1 Risers.** The riser height shall be not more than 8 inches (202 mm). The riser shall be measured vertically between leading edges of the adjacent treads. The greatest riser height within

any flight of stairs shall not exceed the smallest by more than 3/8 inch (9.5 mm). Risers shall be vertical or sloped from the underside of the nosing of the tread above at an angle not more than 30 degrees (0.51 rad) from the vertical. Open risers are permitted.

**Exceptions:**

1. The opening between adjacent treads is not limited on spiral stairways.

2. The riser height of spiral stairways shall be in accordance with Section R311.7.10.1.

**R311.7.8 Handrails.** Handrails shall be provided on not less than one side of each flight of stairs with four or more risers.

**Exception:** When the landing at the top of the stair is not required to have a guardrail.

**R311.7.8.4 Continuity.** Handrails for stairways shall extend for the full length of the flight from a point directly above the top riser of the flight to a point directly above the lowest riser of the flight. Handrail ends shall be returned toward a wall, guard, walking surface continuous to itself, or terminate to a post.

**Exceptions:**

1. Handrails shall be permitted to be interrupted by a newel post at the turn.

2. The use of a volute, turnout, starting easing, or starting newel shall be allowed over the lowest tread and over the top landing.

**R311.7.8.5 Grip size.** Required handrails shall be of one of the following types or provide equivalent grasp ability:

1. Type I. Handrails with a circular cross section shall have an outside diameter of not less than 1 1/4 inches (32 mm) and not greater than 2 inches (51 mm). If the handrail is not circular, it shall have a perimeter dimension of not less than 4 inches (102 mm) and not greater than 6 1/4 inches (160 mm) with a cross section of dimension of not more than 2 1/4 inches (57 mm). Edges shall have a radius of not less than 0.01 inch (0.25 mm).

2. Type II. Handrails with a perimeter greater than 6 1/4 inches (160 mm) shall have a graspable finger recess area on both sides of the profile. The finger recess shall begin within a distance of 3/4 inch (19 mm) measured vertically from the tallest portion of the profile and achieve a depth of not less than 5/16 inch (8 mm) within 7/8 inch (22 mm) below the widest portion of the profile. This required depth shall continue for not less than 3/8 inch (10 mm) to a level that is not less than 1 3/4 inches (45 mm) below the tallest portion of the profile. The width of the handrail above the recess shall be not less than 1 1/4 inches (32 mm) and not more than 2 3/4 inches (70 mm). Edges shall have a radius of not less than 0.01 inch (0.25 mm).

   **Exception:** Exterior stairs are allowed to have a horizontal 2X member to form a 1 1/2-inch graspable dimension in lieu of the above-referenced perimeter dimensions.

**R312.1.3 Opening limitations.** Required guards shall not have openings from the walking surface to the required guard height that allow passage of a sphere 4 inches (102 mm) in diameter.

> **Exception:** The triangular openings at the open side of stair, formed by the riser, tread, and bottom rail of a guard, shall not allow passage of a sphere 6 inches (153 mm) in diameter.

**R312.2.1 Window opening height.** In dwelling units, where the bottom of the clear opening of an operable window opening is located less than 24 inches (610 mm) above the finished floor and greater than 72 inches (1829 mm) above the finished grade or other surface below on the exterior of the building, the operable window shall comply with one of the following:

1. Operable window openings will not allow a 5-inch-diameter (102 mm) sphere to pass through where the openings are in their largest opened position.

2. Operable windows are provided with window opening control devices or fall prevention devices that comply with ASTM F2090.

**R313.1 Town house automatic fire sprinkler systems.** Not adopted by the city.

**R313.1.1 Design and installation.** When an automatic sprinkler system for town houses is installed, it shall be designed and installed in accordance with Section P2904 or NFPA 13D.

**R313.2 One- and two-family dwellings automatic fire systems.** Not adopted by the city.

**R313.2.1 Design and installation.** When automatic sprinkler systems are installed, it shall be designed and installed in accordance with Section P2904 or FPA 13D.

**R314.2.2 Alterations, repairs, and additions.** Where alterations, repairs, or additions requiring a permit occur with a valuation of more than $1,000, the individual dwelling unit shall be equipped with smoke alarms located as required for new dwellings.

> **Exceptions:**
>
> 1. Work involving the exterior surfaces of dwellings, such as the replacement of roofing or siding, the addition or replacement of windows or doors, or the addition of a porch or deck.
>
> 2. Installation, alteration, or repairs of plumbing or mechanical systems.

**R314.3 Location.** Smoke alarms shall be installed in the following locations:

1. In each sleeping room.

2. Outside each separate sleeping area in the immediate vicinity of the bedrooms.

3. On each additional story of the dwelling, including basements and habitable attics and not including crawl spaces and uninhabitable attics. In dwellings or dwelling units with split levels and without an intervening door between the adjacent levels, a smoke alarm installed

on the upper level shall suffice for the adjacent lower level provided that the lower level is less than one full story below the upper level.

4. Not less than 3 feet (914 mm) horizontally from the door or opening of a bathroom that contains a bathtub or shower unless this would prevent placement of a smoke alarm required by this section.

5. In the hallway and in the room open to the hallway in dwelling units where the ceiling height of a room open to a hallway serving bedrooms exceeds that of the hallway by 24 inches (610 mm) or more.

   **Exception:** Hallways less than 4 feet (1,220 mm) in length are allowed to omit the smoke detector within the hallway adjacent to the bedrooms.

**R314.4 Interconnection.** Where more than one smoke alarm is required to be installed within an individual dwelling unit in accordance with Section R314.3, the alarm devices shall be interconnected in such a manner that the actuation of one alarm will activate all of the alarms in the individual dwelling unit. Physical interconnection of smoke alarms shall not be required where listed wireless alarms are installed and all alarms sound upon activation of one alarm.

**Exception:** Interconnection of smoke alarms in existing areas shall not be required where alterations or repairs do not result in removal of interior wall or ceiling finishes exposing the structure, unless there is an attic, crawl space, or basement available that could provide access for interconnection without the removal of interior finishes.

**R315.2.2 Alterations, repairs, and additions.** Where alterations, repairs, or additions requiring a permit occur with a valuation of more than $1,000, the individual dwelling unit shall be equipped with carbon monoxide alarms located as required for new dwellings.

**Exceptions:**

1. Work involving the exterior surfaces of dwellings, such as the replacement of roofing or siding, or the addition or replacement of windows or doors, or the addition of a porch or deck.

2. Installation, alteration, or repairs of plumbing systems.

3. Installation, alteration, or repairs of mechanical systems that are not fuel fired.

**R326.3 Story above grade plane.** A habitable attic shall be considered a story above grade plane.

**Exceptions:** A habitable attic shall not be considered to be a story above grade plane provided that the habitable attic meets all the following:

1. The aggregate area of the habitable attic is either of the following:

   1.1. Not greater than one-third of the floor area of the story below.

1.2. Not greater than one-half of the floor area of the story below where the habitable attic is located within a dwelling unit equipped with a fire sprinkler system in accordance with Section P2904.

2. The occupiable space is enclosed by the roof assembly above, knee walls, if applicable, on the sides and the floor-ceiling assembly below.

3. The floor of the habitable attic does not extend beyond the exterior walls of the story below.

**R403.1.4.1 Frost protection.** Except where otherwise protected from frost, foundation walls, piers, and other permanent supports of buildings and structures shall be protected from frost by one or more of the following methods:

1. Extended below the frost line specified in Table R301.2.

2. Constructed in accordance with Section R403.3.

3. Constructed in accordance with ASCE 32.

4. Erected on solid rock.

Footings shall not bear on frozen soil unless the frozen condition is permanent.

**Exceptions:**

1. Protection of freestanding accessory structures with an area of 1,500 square feet (139 $m^2$) or less, of light-frame construction, with an eave height of 10 feet (3,048 mm) or less shall not be required.

2. Protection of freestanding accessory structures with an area of 400 square feet (37 $m^2$) or less, of other than light-frame construction, with an eave height of 10 feet (3,048 mm) or less shall not be required.

**R502.3.1 Sleeping areas and attic joists.** Table R502.3.1(1) shall be used to determine the maximum allowable span of floor joists that support sleeping areas and attics that are accessed by means of a fixed stairway in accordance with Section R311.7, provided that the design live load does not exceed 40 pounds per square foot (1.92 kPa) and the design dead load does not exceed 20 pounds per square foot (0.96 kPa). The allowable span of ceiling joists that support attics used for limited storage or no storage shall be determined in accordance with Section R802.5.

**R506.2.3 Vapor retarder.** A minimum 6-mil (0.006 inch; 0.152 mm) vapor retarder conforming to ASTM E1745 Class A requirements with joints lapped not less than 6 inches (152 mm) shall be placed between the concrete floor slab and the base course or the prepared subgrade where a base course does not exist.

**Exception:** The vapor retarder is not required for the following:

1. Garages, utility buildings, and other unheated *accessory structures*.

2. For unheated storage rooms having an area of less than 70 square feet (6.5 $m^2$) and carports.

3. Driveways, walks, patios, and other flatwork not likely to be enclosed and heated at a later date.

4. Where *approved* by the *building official*, based on local site conditions.

**R507.3 Footings.** Decks shall be supported on concrete footings or other *approved* structural systems designed to accommodate all loads in accordance with Section R301. Deck footings shall be sized to carry the imposed loads from the deck structure to the ground as shown in Figure R507.3.

**Exception:** Decks not supported by a dwelling need not be provided with footings that extend below the frost line.

**R602.10.1.2 Location of braced wall lines and permitted offsets.** Each braced wall line shall be located such that no more than two-thirds of the required braced wall panel length is located to one side of the braced wall line. Braced wall panels shall be permitted to be offset not more than 4 feet (1,219 mm) from the designated braced wall line. Braced wall panels parallel to a braced wall line shall be offset not more than 4 feet (1219 mm) from the designated braced wall line location as shown in Figure R602.10.1.1.

Exterior walls parallel to a braced wall line shall be offset not more than 4 feet (1,219 mm) from the designated braced wall line location as shown in Figure R602.10.1.1.

Interior walls used as bracing shall be offset not more than 4 feet (1,219 mm) from a braced wall line through the interior of the building as shown in Figure R602.10.1.1.

**Exception:** The offset out-of-plane may exceed 4 feet (1,219 mm) and the out-to-out offset dimension may exceed 8 feet (2,438 mm) if the area of the offset is less than 200 square feet (18.6 $m^2$).

**R602.12 Simplified wall bracing.** Building's meeting all of the conditions listed below shall be permitted to be braced in accordance with this section as an alternate to the requirements of Section R602.10. The entire building shall be braced in accordance with this section; the use of other bracing provisions of Section R602.10, except as specified herein, shall not be permitted.

1. There shall be not more than three stories above the top of a concrete or masonry foundation or basement wall. Permanent wood foundations shall not be permitted.

2. Floors shall not cantilever more than 24 inches (607 mm) beyond the foundation or bearing wall below.

3. Wall height shall not be greater than 12 feet (3,658 mm).

4. The building shall have a roof eave-to-ridge height of 20 feet (6,096 mm) or less.

5. Exterior walls shall have gypsum board with a minimum thickness of 1/2 inch (12.7 mm) installed on the interior side fastened in accordance with Table R702.3.5.

6. The structure shall be located where the ultimate design wind speed is less than or equal to 130 mph (58 m/s) and the exposure category is B or C.

7. The structure shall be located in Seismic Design Category A, B, or C for detached one- and two-family dwellings or Seismic Design Category A or B for town houses.

8. Cripple walls shall not be permitted in three-story buildings.

**R806.2 Minimum vent area.** The minimum net free ventilating area shall be 1/150 of the area of the vented space.

**Exception:** The minimum net free ventilation area shall be 1/300 of the vented space provided one or more of the following conditions are met:

1. In Climate Zones 6, 7, and 8, a Class I or II vapor retarder is installed on the warm-in-winter side of the ceiling.

2. Not less than 40 percent and not more than 50 percent of the required ventilating area is provided by ventilators located in the upper portion of the attic or rafter space. Upper ventilators shall be located not more than 3 feet (914 mm) below the ridge or highest point of the space, measured vertically. The balance of the required ventilation provided shall be located in the bottom one-third of the attic space. Where the location of wall or roof framing members conflicts with the installation of upper ventilators, installation more than 3 feet (914 mm) below the ridge or highest point of the space shall be permitted.

**N1101.2 (R101.3) Intent.** This chapter shall regulate the design and construction of buildings for the effective use and conservation of energy over the useful life of each new building. Additions, alterations, renovations, or repairs to an existing building, building system, or portion thereof may conform to the provisions of this code as they relate to new construction without requiring the unaltered portion(s) of the existing building or building system to comply with this code. This chapter is intended to provide flexibility to permit the use of innovative approaches and techniques to achieve this objective. This chapter is not intended to abridge safety, health, or environmental requirements contained in other applicable codes or ordinances.

**N1101.13 (R401.2) Application.** Not adopted by the city.

**N1101.14 (R401.3) Certificate.** Not adopted by the city.

| Table N1102.1.3 (R402.1.3) Insulation Minimum R-Values and Fenestration Requirements By Component[a] | | | | | | | | | | |
|---|---|---|---|---|---|---|---|---|---|---|
| Climate Zone | *Fenestration U-Factor*[i] | *Skylight* U-Factor | *Glazed Fenestration SHGC*[b, e] | Ceiling R-Value | Wood Frame Wall R-Value | *Mass Wall R-Value* | Floor R-Value | *Basement*[g] Wall R-Value | *Slab4* R-Value | *Crawl Space*[g] Wall R-Value |
| 6 | 0.32 | 0.55 | NR | 49 | 20 or 13 + 5h | 15/19 | 30[g] | 10/13 | 10, 4 ft | 10/13 |

For SI: 1 foot = 304.8 mm
NR = Not Required.

a. R-values are minimums. U-factors and SHGC are maximums. Where insulation is installed in a cavity which is less than the label or design thickness of the insulation, the installed R-value of the insulation shall not be less than the R-value specified in the table.

b. The fenestration U-factor column excludes skylights. The SHGC column applies to all glazed fenestrations.
*Exception:* Skylights may be excluded from glazed fenestration SHGC requirements in Climate Zones 1 through 3 where the SHGC for such skylights does not exceed 0.30.

c. "5ci or 13" means R-5 continuous insulation (ci) on the interior or exterior surface of the wall or R-13 cavity insulation on the interior side of the wall. "10ci or 13" means R-10 continuous insulation (ci) on the interior or exterior surface of the wall or R-13 cavity insulation on the interior side of the wall. "15ci or 19 or 13 + 5ci" means R-15 continuous insulation (ci) on the interior or exterior surface of the wall; or R-19 cavity insulation on the interior side of the wall; or R-13 cavity insulation on the interior of the wall in addition to R-5 continuous insulation on the interior or exterior surface of the wall. "10/13" means R-10 continuous insulation on the interior or exterior of the home or R-13 cavity insulation on the interior of the basement wall. "15/19" means R-15 continuous insulation on the interior or exterior of the home or R-19 cavity insulation on the interior of the basement wall. Alternatively, compliance with "15/19" shall be R-13 cavity insulation on the interior of the basement wall plus R-5 continuous insulation on the interior or exterior of the home.

d. R-5 insulation shall be provided under the full slab area of a heated slab in addition to the required slab edge insulation R-value for slabs, as indicated in the table. The slab edge insulation for heated slabs shall not be required to extend below the slab.

e. There are no SHGC requirements in the Marine Zone.

f. Basement wall insulation is not required in warm humid locations as defined by Figure N1101.7 and Table N1101.7.

g. The first value is cavity insulation; the second value is continuous insulation. Therefore, as an example, "13 + 5" means R-13 cavity insulation plus R-5 continuous insulation.

h. Mass walls shall be in accordance with Section N1102.2.5. The second R-value applies where more than half of the insulation is on the interior of the mass wall.

i. A maximum U-factor of 0.32 shall apply in Climate Zones 3 through 8 to vertical fenestration products installed in buildings located either:
1. Above 4,000 feet in elevation; or
2. In windborne debris regions where protection of openings is required by Section R301.2.1.2.

j. Alternatively, insulation sufficient to fill the framing cavity providing not less than an R-value of R-19.

k. The minimum R-value for ceilings is further based on a minimum 6-inch (152 mm) heel height to allow the ceiling insulation to extend over the top plate.

**N1102.2.8.1 (R402.2.8.1) Basement wall insulation installation.** Where *basement walls* are insulated, the insulation shall be installed from the top of the *basement wall* down to 10 feet (3,048 mm) below grade or to the basement floor, whichever is less.

**Exception:** Exterior basement walls of enclosed mechanical rooms.

**N1102.4.1.2 (R402.4.1.2) Testing.** Not adopted by the city.

**N1102.4.1.3 (R402.4.1.3) Leakage rate.** Not adopted by the city.

**N1102.4.4 (R402.4.4) Rooms containing fuel-burning appliances.** Not adopted by the city.

**N1102.4.6 (R402.4.6) Electrical and communication outlet boxes (air-sealed boxes).** Not adopted by the city.

**N1103.3.1 (R403.3.1) Ducts located outside conditioned space.** Supply and return ducts located outside *conditioned space* shall be insulated to an *R*-value of not less than R-8 for ducts 3 inches (76 mm) in diameter and larger and not less than R-6 for ducts smaller than 3 inches (76 mm) in diameter.

**N1103.3.5 (R403.3.5) Duct testing (Mandatory).** Not adopted by the city.

**N1103.5 (R403.5) Service hot water systems.** Energy conservation measures for service hot water systems shall be in accordance with the plumbing code.

**N1103.6.3 (R403.6.3) Testing.** Not adopted by the city.

**N1104.1 (R404.1) Lighting equipment.** Not adopted by the city.

**N1109.2 (R501.2) Compliance.** Additions, alterations, repairs or changes of occupancy to, or relocation of, an existing building, building system, or portion thereof may comply with Section N1110, N1111, N1112, or N1113, respectively, in this code. Changes where unconditioned space is changed to conditioned space shall comply with Section N1110.

**N1110.1 (R502.1) General.** *Additions* to an existing *building*, *building* system, or portion thereof may conform to the provisions of this chapter as they relate to new construction without requiring the unaltered portion of the existing *building* or *building* system to comply with this chapter. *Additions* shall not create an unsafe or hazardous condition or overload existing *building* systems. An *addition* shall be deemed to comply with this chapter where the *addition* alone complies, where the existing *building* and *addition* comply with this chapter as a single *building*, or where the *building* with the *addition* does not use more energy than the existing *building*. *Additions* shall be in accordance with Section N1110.2 or N1110.3.

**N1111.1 (R503.1) General.** Alterations to any building or structure may comply with the requirements of the code for new construction, without requiring the unaltered portions of the existing building or building system to comply with this chapter. Alterations shall be such that the existing building or structure is no less conforming with the provisions of this chapter than the existing building or structure was prior to the alteration.

Alterations to an existing building, building system, or portion thereof may conform to the provisions of this chapter as they relate to new construction without requiring the unaltered portions of the existing building or building system to comply with this chapter. Alterations shall not create an unsafe or hazardous condition or overload existing building systems. Alterations shall be such that the existing building or structure uses no more energy than the existing building or structure prior to the alteration. Alterations to existing buildings shall comply with Sections N1111.1.1 through N1111.1.4.

**N1112.1 (R504.1) General.** Buildings, structures, and parts thereof may be repaired in compliance with Section N1109.3 and this section. Work on nondamaged components necessary for the required repair of damaged components shall be considered part of the repair and shall not be subject to the requirements for alterations in this chapter. Routine maintenance required by Section N1109.3, ordinary repairs exempt from permit, and abatement of wear due to normal service conditions shall not be subject to the requirements for repairs in this section.

**N1113.1 (R505.1) General.** Any space that is converted to a *dwelling unit* or portion thereof from another use or occupancy may comply with this chapter.

> **Exception:** Where the simulated performance option in Section N1105 is used to comply with this section, the annual energy cost of the *proposed design* is permitted to be 110 percent of the annual energy cost allowed by Section N1105.2.

**M1305.1.3.1 Ground clearance.** Equipment and appliances supported from the ground shall be level and firmly supported on a concrete slab or other approved material extending not less than 1 1/2 inches (38 mm) above the adjoining ground. Such support shall be in accordance with the manufacturer's installation instructions. Appliances suspended from the floor shall have a clearance of not less than 6 inches (152 mm) from the ground.

**M1305.1.3.3 Electrical requirements.** A luminaire controlled by a switch located at the required passageway opening and a receptacle outlet shall be installed at or near the *appliance* location in accordance with *National Electric Code*. Exposed lamps shall be protected from damage by location or lamp guards.

**M1502.4.2 Duct installation.** Exhaust ducts shall be supported at 4-foot (1,219 mm) intervals and shall be secured in place. The insert end of the duct shall extend into the adjoining duct or fitting in the direction of airflow. Exhaust duct joints shall be sealed in accordance with Section M1601.4.1. Ducts shall not be joined with screws or similar fasteners that protrude into the inside of the duct. Where dryer exhaust ducts are enclosed in wall or ceiling cavities, such cavities shall allow the installation of the duct without deformation.

**M1504.2 Duct length.** The length of exhaust and supply ducts used with ventilating equipment shall not exceed the lengths determined in accordance with Table M1504.2 as revised.

**Table M1504.2**
**Duct Length**

| Fan airflow rating CFM | 0–80 | 81–125 | 126–200 | 201–300 | Over 300 |
|---|---|---|---|---|---|
| Minimum duct diameter (inches) | 4 | 5 | 6 | 7 | 8 |

**M1504.3 Exhaust openings.** Air exhaust openings shall terminate as follows:

1. Not less than 3 feet (914 mm) from property lines.

2. Not less than 3 feet (914 mm) from gravity air intake openings, operable windows, and doors.

3. Not less than 10 feet (3,048 mm) from mechanical air intake openings except where the exhaust opening is located not less than 3 feet (914 mm) above the air intake opening. Openings shall comply with Sections R303.5.2 and R303.6.

4. Minimum clearance between the exhaust and intake openings of an HRV/PRV system shall be in accordance with the manufacturer's installation instructions.

**M1505.4 Whole-house mechanical ventilation system.** Whole-house mechanical ventilation systems shall be designed in accordance with Sections M1505.4.1 through M1505.4.4.

**Exceptions:**

1. A bathroom exhaust fan shall operate continuously at a minimum rate of 20 cfm. A 6-inch-round passive makeup air shall be provided. If opening directly into the occupied space, such opening shall not decrease the comfort conditions of the oecupied space. Such opening may also be used to provide combustion air for fuel-fired appliances if sized and designed for combustion air purposes. If opening into the mechanical room, permanent openings shall be provided between the mechanical room and occupied space to provide a path of travel for the air. The exhaust fan shall be located in the bathroom farthest away from the source of makeup air and shall be rated for 0.8 sones or less.

2. A 4-inch-round outdoor air duct connected to the return side of the air handler. The duct shall be insulated to a minimum R-6 and shall connect to the return duct within 8 feet of the air handler connection, not above a finished ceiling.

**Table M1505.4.4**

**Minimum Required Local Exhaust Rates for One- and Two-Family Dwellings**

| Area to be Exhausted | Exhaust Rates |
|---|---|
| Bathrooms—Toilet Rooms | Mechanical exhaust capacity of 50 cfm intermittent or 20 cfm continuous |

**Section M1506 Sub slab Soil Exhaust Systems.**

**M1506.1 General.** When a sub slab soil exhaust system is provided, the duct shall conform to the requirements of this section.

**M1506.2 Materials.** Sub slab soil exhaust system duct material shall be air duct material listed and labeled to the requirements of UL 181 for Class 0 air ducts, or any of the following piping materials that comply with the plumbing code as building sanitary drainage and vent pipe: cast iron; galvanized steel; copper or copper-alloy pipe and tube of a weight not less than type DWV; and plastic piping.

**M1506.3 Grade.** Exhaust system ducts shall not be trapped and shall have a minimum slope of 1/8 unit vertical in 12 units horizontal (1 percent slope).

**M1506.4 Termination.** Sub slab soil exhaust system ducts shall extend through the roof and terminate at least 6 inches (152 mm) above the roof and at least 10 feet (3,048 mm) from any operable openings or air intake.

**M1506.5 Identification.** Sub slab soil exhaust ducts shall be permanently identified within each floor level by means of a tag, stencil, or other approved marking.

**M1601.1.1 Aboveground duct systems.** Aboveground duct systems shall conform to the following:

1. Equipment connected to duct systems shall be designed to limit discharge air temperature to not greater than 250°F (121°C).

2. Factory-made ducts shall be listed and labeled in accordance with UL 181 and installed in accordance with the manufacturer's instructions. Flexible air ducts shall be limited in length to 14 feet. Flexible air connectors are not allowed.

3. Fibrous glass duct construction shall conform to the SMACNA *Fibrous Glass Duct Construction Standards* or NAIMA *Fibrous Glass Duct Construction Standards*.

4. Field-fabricated and shop-fabricated metal and flexible duct constructions shall conform to the SMACNA HVAC *Duct Construction Standards—Metal and Flexible* except as allowed by Table M1601.1.1. Galvanized steel shall conform to ASTM A 653, except that sheet steel and strip used for duct, connectors, and round duct shall be G40 galvanized steel of lock-forming quality.

5. The use of gypsum products to construct return air ducts or plenums is permitted, provided that the air temperature does not exceed 125°F (52°C) and exposed surfaces are not subject to condensation.

6. Duct systems shall be constructed of materials having a flame spread index of not greater than 200.

7. Stud wall cavities and the spaces between solid floor joists to be used as air plenums shall comply with the following conditions:

    7.1. These cavities or spaces shall not be used as a plenum for supply air.

    7.2. These cavities or spaces shall not be part of a required fire-resistance-rated assembly.

    7.3. Stud wall cavities shall not convey air from more than one floor level.

    7.4. Stud wall cavities and joist-space plenums shall be isolated from adjacent concealed spaces by tight-fitting fire blocking in accordance with Section R302.11. Fire blocking materials used for isolation shall comply with Section R302.11.1.

7.5. Stud wall cavities in the outside walls of the building envelope assemblies shall not be utilized as air plenums.

8. Volume dampers, equipment, and other means of supply, return, and exhaust air adjustment used in system balancing shall be provided with access.

**M1601.1.2 Underground duct systems.** Underground duct systems shall be constructed of approved concrete, clay, metal, or plastic. The maximum design temperature for systems utilizing plastic duct and fittings shall be 150°F (66°C). Metal ducts shall be protected from corrosion in an approved manner or shall be completely encased in concrete not less than 2 inches (51 mm) thick. Nonmetallic ducts shall be installed in accordance with the manufacturer's instructions. Plastic pipe and fitting materials shall conform to cell classification 12454-B of ASTM D1248 or ASTM D1784 and external loading properties of ASTM D2412. Ducts shall slope to a drainage point that has access. Ducts shall be sealed and secured prior to encasing the ducts in concrete or direct burial. Metallic ducts having an approved protective coating and nonmetallic ducts shall be installed in accordance with the manufacturer's instructions.

**M1601.4.1 Joints, seams, and connections.** Longitudinal and transverse joints, seams, and connections in metallic and nonmetallic ducts shall be constructed as specified in SMACNA HVAC *Duct Construction Standards—Metal and Flexible* and NAIMA *Fibrous Glass Duct Construction Standards*. Joints, longitudinal and transverse seams, and connections in ductwork outside the building thermal envelope, all return ducts located within 10 feet (3.05 m) of any appliance or all return ducts within a mechanical room, and all supply main trunk ducts and branch duct connections to the main trunk ducts shall be securely fastened and sealed with welds, gaskets, mastics (adhesives), mastic-plus-embedded-fabric systems, liquid sealants, or tapes. Tapes and mastics used to seal fibrous glass ductwork shall be listed and labeled in accordance with UL 181A and shall be marked "181A-P" for pressure-sensitive tape, "181 A-M" for mastic, or "181 A-H" for heat-sensitive tape.

Tapes and mastics used to seal metallic and flexible air ducts and flexible air connectors shall comply with UL 181B and shall be marked "181 B-FX" for pressure-sensitive tape or "181 B-M" for mastic. Duct connections to flanges of air distribution system equipment shall be sealed and mechanically fastened. Mechanical fasteners for use with flexible nonmetallic air ducts shall comply with UL 181B and shall be marked 181 B-C. Crimp joints for round metallic ducts shall have a contact lap of not less than 1 inch (25 mm) and shall be mechanically fastened by means of not less than three sheet metal screws or rivets equally spaced around the joint.

Closure systems used to seal all ductwork shall be installed in accordance with the manufacturer's instructions.

**Exceptions:**

1. Spray polyurethane foam shall be permitted to be applied without additional joint seals.

2. Where a duct connection is made that is partially inaccessible, three screws or rivets shall be equally spaced on the exposed portion of the joint so as to prevent a hinge effect.

3. For ducts having a static pressure classification of less than 2 inches of water column (500 Pa), additional closure systems shall not be required for continuously welded joints and seams and locking-type joints and seams. This exception shall not apply to snap-lock and button-lock type joints and seams that are located outside of conditioned space.

**M1601.4.4 Support.** Factory-made ducts listed in accordance with UL 181 shall be supported in accordance with the manufacturer's installation instructions. Field- and shop-fabricated fibrous glass ducts shall be supported in accordance with the SMACNA *Fibrous Glass Duct Construction Standards* or the NAIMA *Fibrous Glass Duct Construction Standards*. Field- and shop-fabricated metal and flexible ducts shall be supported in accordance with the SMACNA HVAC *Duct Construction Standards—Metal and Flexible*. Metal ducts shall be supported by 1/2-inch-wide (13 mm) 18-gage, 1-inch-wide (25 mm) 24-gage, or 1 1/2-inch-wide (39 mm) 26-gage metal straps or 12-gage galvanized wire at intervals not exceeding 10 feet (3,048 mm), or other approved means.

**G2402.3 (201.3) Terms defined in other codes.** Where terms are not defined in this code and are defined in the *International Building Code*, *International Fire Code*, NFPA-70, *International Mechanical Code, International Fuel Gas Code* or *Uniform Plumbing Code*, such terms shall have meanings ascribed to them as in those *codes*.

**G2407.6 (304.6) Outdoor combustion air.** Outdoor combustion air shall be provided through opening(s) to the outdoors in accordance with Section G2407.6.1, G2407.6.2, or G2407.6.3. The minimum dimension of air openings shall be not less than 3 inches (76 mm).

Combustion air intake opening shall be located a minimum of 3 feet (914 mm) from a gas meter.

**G2407.6.3 Alternate combustion air sizing.** As an alternate, the net free area of openings, ducts, or plenums supplying air to an area containing gas- and oil-burning appliances shall be in accordance with CSA B149.1:20, Natural Gas and Propane Installation Code, published by the Canadian Standards Association (CSA).

The combustion air duct is required to be upsized one diameter size when a dryer is installed in the same room as the combustion air.

**G2408.1 (305.1) General.** Equipment and appliances shall be installed as required by the terms of their approval in accordance with the conditions of listing, the manufacturer's instructions, and this code. Manufacturer's installation instructions shall be available on the job site at the time of inspection. Where a code provision is less restrictive than the conditions of the listing of the equipment or appliance or the manufacturer's installation instructions, the conditions of the listing and the manufacturer's installation instructions shall apply.

After completion of the installation, all safety and operating controls and venting shall be tested before placing the burner in service in accordance with the manufacturer's installation

instructions. The following requirements need to be recorded and affixed to the inside of the gas train access panel:

1. The rate of flow of the gas or fuel shall be adjusted to within plus or minus 5 percent of the required Btu/hr. Rating at the manifold pressure specified by the manufacturer. When the prevailing pressure is less than the manifold pressure specified, the rates shall be adjusted at the prevailing pressure.

2. The gas inlet pressure per the manufacturer's installation settings.

3. The temperature rises across the heat exchanger per the manufacturer's installation settings.

4. The static pressure of the supply and return ducts per the manufacturer's installation settings.

Unlisted appliances approved in accordance with Section G2404.3 shall be limited to uses recommended by the manufacturer and shall be installed in accordance with the manufacturer's instructions, the provisions of this code, and the requirements determined by the code official.

**G2408.4 (305.7) Clearances from grade.** *Equipment* and *appliances* installed at grade level shall be supported on a level concrete slab or other *approved* material extending not less than 1 1/2 inches (38 mm) above adjoining grade or shall be suspended not less than 6 inches (152 mm) above adjoining grade. Such supports shall be installed in accordance with the manufacturer's instructions.

**G2410.2 (309.2) Connections.** Electrical connections between *appliances* and the building wiring, including the grounding of the *appliances*, shall conform to the *National Electric Code*.

**G2415.2 (404.2) CSST.** CSST piping systems shall be installed in accordance with the terms of their approval, the conditions of listing, the manufacturer's instructions, and this code.

The piping located on the exterior extending from the gas meter to the inside of the structure shall be a metallic pipe in compliance with Section G2414.3. The entrance into the structure shall be provided with the appropriate transition flange where an alternate gas piping material is utilized on the inside of the structure.

**G2415.3 (404.3) Prohibited locations.** Piping shall not be installed in or through a ducted supply, return or exhaust, or a clothes chute, chimney or gas vent, dumbwaiter, or elevator shaft.

**G2415.6 (404.6) Piping through foundation walls.** Underground piping, where installed through the outer foundation or basement wall of a building, shall be encased in a protective sleeve or protected by an approved device or method. The space between the gas piping and the sleeve and between the sleeve and the wall shall be sealed to prevent the entry of gas and water.

**G2415.12 (404.12) Minimum burial depth.** The minimum depth shall be increased to 18 inches (457 mm) if external damage to the piping or tubing from external forces is likely to result. Where a minimum of 12 inches (305 mm) of depth cannot be provided, the pipe shall be installed in conduit or bridged (shielded).

**G2415.12.1 (404.12.1) Individual outdoor appliances.** Not adopted by the city.

**G2420.1.2 (409.1.2) Prohibited locations.** Shutoff valves shall be prohibited in concealed locations, furnace plenums, and accessible spaces between a fixed ceiling and a dropped ceiling unless serving a gas appliance installed in that space.

***Part VII—Plumbing.*** The following chapters are not adopted by the city: Chapter 25—Plumbing Administration; Chapter 26—General Plumbing Requirements; Chapter 27—Plumbing Fixtures; Chapter 28—Water Heaters; Chapter 29—Water Supply and Distribution except Section P2904 Dwelling Unit Fire Sprinkler Systems; Chapter 30—Sanitary Drainage; Chapter 31—Vents; Chapter 32—Traps; and Chapter 33—Storm Drainage.

The provisions of the plumbing code of the most current *Uniform Plumbing Code* adopted by the South Dakota State Plumbing Commission shall apply to the installation, alterations, repairs, and replacement of plumbing systems, including equipment, appliances, fixtures, and appurtenances, and where connected to a water or sewage system for detached one- and two-family dwellings and multiple single-family dwellings (town houses) not more than three stories high with separate means of egress and their accessory structures.

***Part VIII—Electrical.*** The following chapters are not adopted by the city: Chapter 34—General Requirements; Chapter 35—Electrical Definitions; Chapter 36—Services; Chapter 37—Branch Circuit and Feeder Requirements; Chapter 38—Wiring Methods; Chapter 39—Power and Lighting Distribution; Chapter 40—Device and Luminaires; Chapter 41—Appliance Installation; Chapter 42—Swimming Pools; Chapter 43—Class 2 Remote- Control, Signaling and Power-Limited Circuits.

The provisions of the electrical code or the most current code adopted *National Electrical Code* by the South Dakota State Electrical Commission shall apply to the installation, alteration, repair, relocation, replacement, addition to, use, or maintenance of any electrical system, apparatus, wiring, or equipment for electrical, light, heat, power, fire alarms, and associate controls for detached one- and two-family dwellings and multiple single-family dwellings (town houses) not more than three stories high with separate means of egress and their accessory structures.

Date adopted: 05/31/2022.

F. Butch Oseby, Mayor

ATTEST:

Tobias Schantz, Finance officer

CITY OF CROOKS CORPORATE SEAL SOUTH DAKOTA

Published: 06/10/2022 & 06/17/2022
Published at the approximate cost of: $22.31