REGULAR MEETING
PLAN COMMISSION/ZONING BOARD OF APPEALS
DECEMBER 5, 2022 - 7:00PM
VILLAGE HALL - BOARD ROOM

The Plan Commission/Zoning Board of Appeals hears requests for zoning text amendments, rezoning, special uses, and variations and forwards recommendations to the Board of Trustees. The Commission also reviews all proposals to subdivide property and is charged with Village planning, including the updating of the Comprehensive Plan for Land Use. All Plan Commission actions are advisory and are submitted to the Board of Trustees for final action.

I. ROLL CALL

II. APPROVAL OF NOVEMBER 21, 2022 MEETING MINUTES

III. PUBLIC HEARINGS

A. Z-22-2022: 7600-7630 County Line Rd. (MedProperties LLC); Variation, Special Use Amendment, and Findings of Fact [CONTINUED FROM AUGUST 15, SEPTEMBER 19, AND OCTOBER 17, 2022]

REQUEST BY PETITIONER TO CONTINUE TO JANUARY 16, 2023.

Request to amend Ordinance #A-834-02-17 for a special use for final plat approval and a medical office in the T-1 Transitional District and a variation from Zoning Ordinance section XI.C.8 to permit parking in the front yard. The petitioner is requesting to reconfigure the existing parking lot and add additional spaces.

B. Z-24-2022: 311 Shore Dr. (DP Burr Ridge, LLC); Special Uses and Findings of Fact [CONTINUED FROM NOVEMBER 21, 2022]

REQUEST BY PETITIONER TO CONTINUE TO DECEMBER 19, 2022.

Request for special uses for (1) automobile and equipment service and (2) outdoor storage pursuant to Zoning Ordinance section X.F.2; and a special use for (3) a fence in a non-residential district pursuant to Zoning Ordinance section IV.J. The petitioner intends to operate a Tesla Motors, Inc. auto repair center at the site.

C. Z-25-2022/V-04-2022: 11731 87th Street (McNaughton); Rezoning, Special Use, Variation, Planned Unit Development (PUD), Preliminary Plan approval of a PUD, and Findings of Fact

Requests to rezone the property as per section VI.E of the Zoning Ordinance from the R-1 Single-Family Residence District to the R-2B Single-Family Residence District; variations for a Planned Unit Development (PUD) on a parcel measuring 15 acres with 585.5 ft. of lot width instead of the 40 acres and 800 ft. of lot width required as per section VI.E.3.b of the Zoning Ordinance; a special use for a PUD as per section VI.E.2 of the Zoning Ordinance; and Preliminary Plan approval of the PUD as per section XIII.L.2.c. The petitioner seeks to develop the site for a 20-lot single-family residential subdivision.

D. Z-26-2022: 525 Village Center Drive (AT&T); Special Use, PUD Amendment, and Findings of Fact

Request for a special use for a personal wireless facility as per section VIII.C.2 of the Zoning Ordinance and to amend Ordinance A-834-10-05 to permit alterations to the structure related to the wireless facility. The petitioner seeks to co-locate a cellular site at an existing rooftop, including installation of an antennae and support equipment.

IV. CORRESPONDENCE

A. Board Reports – No Report
November 28, 2022 meeting cancelled

B. Building Reports – No Report

V. OTHER CONSIDERATIONS

A. PC-07-2022 Election of Vice-Chair

VI. PUBLIC COMMENT

VII. FUTURE MEETINGS

December 12 Village Board

Commissioner Broline is the scheduled representative.

December 19 Plan Commission

A. Z-24-2022: 311 Shore Dr. (DP Burr Ridge, LLC); Special Uses and Findings of Fact [CONTINUED FROM NOVEMBER 21 AND DECEMBER 5, 2022]

Request for special uses for (1) automobile and equipment service and (2) outdoor storage pursuant to Zoning Ordinance section X.F.2; and a special use for (3) a fence in a non-residential district pursuant to Zoning Ordinance section IV.J. The petitioner intends to operate a Tesla Motors, Inc. auto repair center at the site.

January 9 Village Board

Commissioner Morton is the scheduled representative.

January 16 Plan Commission

A. Z-22-2022: 7600-7630 County Line Rd. (MedProperties LLC); Variation, Special Use Amendment, and Findings of Fact [CONTINUED FROM AUGUST 15, SEPTEMBER 19, OCTOBER 17, and DECEMBER 5, 2022]

Request to amend Ordinance #A-834-02-17 for a special use for final plat approval and a medical office in the T-1 Transitional District and a variation from Zoning Ordinance section XI.C.8 to permit parking in the front yard. The petitioner is requesting to reconfigure the existing parking lot and add additional spaces.

January 23 Village Board

Commissioner Stratis is the scheduled representative.

VIII. ADJOURNMENT

VILLAGE OF BURR RIDGE PLAN COMMISSION/ZONING BOARD OF APPEALS MINUTES FOR REGULAR MEETING OF NOVEMBER 21, 2022

I. ROLL CALL

The meeting of the Plan Commission/Zoning Board of Appeals was called to order at 7:00 p.m. at the Burr Ridge Village Hall Board Room, 7660 County Line Road, Burr Ridge, Illinois by Chairman Trzupek.

ROLL CALL was noted as follows:

PRESENT: 7 – Irwin, Parrella, Petrich, Broline, Stratis, Morton, and Trzupek
ABSENT: 1 – McCollian

Community Development Director Janine Farrell was also present.

II. APPROVAL OF PRIOR MEETING MINUTES – SEPTEMBER 19, 2022

Commissioner Petrich requested that the minutes be clarified for PC-04-2022 that a portion of the sidewalk was to be removed. During the meeting it was not known if the sidewalk was being eliminated, but it was later confirmed at the Board meeting.

A **MOTION** was made by Commissioner Petrich and **SECONDED** by Commissioner Morton to approve the minutes of the September 19, 2022 Plan Commission meeting as amended.

ROLL CALL VOTE was as follows:

AYES: 6 – Petrich, Morton, Irwin, Parrella, Broline, and Trzupek
NAYS: 0 – None
ABSTAIN: 1 – Stratis

MOTION CARRIED by a vote of 6-0 with one abstention.

III. PUBLIC HEARINGS

Chairman Trzupek conducted the swearing in of all those wishing to speak during the public hearings on the agenda for the meeting.

A. Z-22-2022: 7600-7630 County Line Rd. (MedProperties LLC); Variation, Special Use Amendment, and Findings of Fact

Chairman Trzupek noted that this case was scheduled for the October 17, 2022 Plan Commission meeting and was continued to December 5, 2022 at the request of the petitioner.

Chairman Trzupek asked about the delays in the case and believed there had been urgency in getting the additional parking installed this year. Director Farrell stated that the petitioner was looking into modifying the fence which took some time and due to holidays and vacations by their staff, the December 5th agenda was the first one they were able to accommodate. Director Farrell noted that the case will be discussed by the Stormwater Committee on November 22, 2022.

A **MOTION** was made by Commissioner Irwin and **SECONDED** by Commissioner Stratis to continue the public hearing for Z-22-2022 until December 5, 2022.

ROLL CALL VOTE was as follows:

AYES: 7 – Irwin, Stratis, Morton, Petrich, Parrella, Broline, and Trzupek
NAYS: 0 – None

MOTION CARRIED by a vote of 7-0.

B. Z-24-2022: 311 Shore Dr. (DP Burr Ridge, LLC); Special Uses and Findings of Fact

Chairman Trzupek introduced the case and asked for a summary. Director Farrell noted that there are three special use requests for automobile and equipment service, outdoor storage, and for a fence in a non-residential district. The property is located within the Hinsdale Industrial Park. The site contains a building and a parking lot and the petitioner is proposing to operate a Tesla collision repair facility. The building will undergo remodeling to accommodate the use. Public hours of operation will be 8:00 a.m. - 7:00 p.m. and employees will work 6:00 a.m. – 12:00 a.m. in two shifts. There will be about 45 employees total and 15 customers per day with 60-80 vehicles per week. Parking will be unchanged at 90 spaces, 21 regular and 2 ADA outside of fence, 67 inside fence including 6 charging stations. Director Farrell showed the plans on the screen and noted the areas which are changing including the entrance to make it accessible with removal of some landscaping and addition of new landscaping, dumpsters within a loading dock area, a dumpster in the parking lot within the fence, and elimination of cross-access with the property to the east. The proposed fence is 8’2” in height, solid, and within the side yard which are deviations from the fencing standards and must be approved through conditions of the special use. On the interior, one loading dock door will be removed and infilled with EIFS, and batteries will be stored. Tire storage will be outdoors within the fenced area.

Chairman Trzupek asked if there were comparable properties in the area with this extent of fencing or outdoor storage. Director Farrell was not aware of a similar property in the vicinity.

Chairman Trzupek asked if the petitioners were present and wished to speak. Patrick Daly and David Bossy introduced themselves and did not have anything to add.

Chairman Trzupek asked if there was public comment. There was none.

Commissioner Morton asked about the environmental impact of collision repair facilities including chemicals being released into the air and penetrating ground water. The petitioner, Patrick Daly, responded that a representative of Tesla was unavailable to attend this meeting but read from information that they had provided; fume and dust extraction devices, filtered air devices, and air regulators will be provided. Battery storage guidelines are provided to all employees. Commissioner Morton expressed concern about lithium-ion batteries being a fire hazard and that the fires are difficult to abate. The petitioner stated that fire prevention protocol will comply with the Burr Ridge Fire Department and water is used to cool down batteries and fight fires. Commissioner Morton asked about the treatment of the steel fence's surface. The petitioner confirmed an epoxy paint treatment is applied. Commissioner Morton requested greater plant height and year-round landscaping be added to entrance. Commissioner Morton questioned if additional lighting would be added, and the petitioner confirmed that only existing wall packs will be used. Commissioner Morton questioned if complete tires or carcasses will be stored on the property since carcasses can hold water to breed mosquitos; the petitioner did not know. Commissioner Morton questioned why a 5 ft. fence was inadequate and why a solid fence is necessary. The petitioner stated these are Tesla requirements for the security of the vehicles. Commissioner Morton noted that the ADA fine on the proposed signs needs to be updated.

Commissioner Stratis confirmed with Director Farrell that no comments were received by neighbors about the fence. Commissioner Stratis supported the fence for security and theft prevention reasons. Commissioner Stratis disclosed that he knows the petitioners but does not socialize with them and was unaware that they were the applicants in this case. Commissioner Stratis confirmed with the petitioner that there will be security cameras and that batteries will be stored indoors. Commissioner Stratis asked what the standard parking requirement was for this use. Director Farrell did not have the information available and noted that the parking facilities were existing and nonconforming in certain aspects. Commissioner Stratis confirmed with the petitioner that the gate will be mechanized.

Commissioner Broline asked if the Tesla solar cell facility in the Village is affiliated with this facility. The petitioner confirmed it was not.

Commissioner Petrich confirmed with staff that the hours proposed are permitted. Commissioner Petrich asked the petitioner to explain why the parking was adequate. The petitioner stated that they are relying on Tesla's history. Commissioner Petrich confirmed with the petitioner that sales are not being requested. Director Farrell stated that if sales are included in the future, the special use will need to be amended. Commissioner Petrich asked if security lights will be added. Director Farrell stated that any new lights added would require a building permit and photometric plan. Commissioner Petrich did not support the height of the fence.

Commissioner Parrella expressed concerns about the fence height and the inability to see into it if issues were occurring within. Commissioner Parrella confirmed with the petitioner that the 8 ft. height is a Tesla standard and asked if any issues were reported about crime at other facilities. The petitioner was not aware of crime issues in other locations.

Commissioner Irwin asked the other Commissioners about a similar case involving a fence. The Commissioners discussed the previous case on the northwest corner of Madison and 79th Street but could not recall specific details of the fence height or the time limit on the special use. The Commissioners also discussed a similar case on 83rd Street which involved outdoor storage. Commissioner Irwin requested information on those previous cases. Commissioner Irwin asked the petitioners what their involvement was in the project. David Bossy and Patrick Daly clarified that they are under contract to purchase the building and will lease it to Tesla. Commissioner Irwin was concerned about the environmental issues and if the remediation measures are adequate, and about the fence height. Commissioner Irwin requested a condition be added that all repair work occur inside the building.

Chairman Trzupek understood the concern about the battery storage but was not sure if it is more hazardous than fuel and oil storage. Chairman Trzupek confirmed that some cars will be towed and questioned if there was an issue with the trucks having access to the fenced area. Chairman Trzupek stated that the fence height will deter theft but prefers something more open in case something is occurring within the area. Chairman Trzupek noted this is a larger than typical fenced area but supports the petition in general.

Director Farrell mentioned that Tesla originally proposed a chain link fence with slats and asked the Commissioners if chain link is acceptable. The Commissioners generally agreed that chain link was not acceptable.

Chairman Trzupek confirmed with the petitioner that the gate was the same material as the fence.

The Commissioners discussed the function of the fenced area to protect vehicles that are waiting to be repaired and waiting for pick-up, that the extent of the fence is too large, that employees could park outside of the fenced area which would reduce the overall fenced space, that shift change will result in an open gate for periods of time, and emergency vehicle access.

Commissioner Broline asked about signage. The petitioner confirmed that a monument sign will be installed. Chairman Trzupek noted that if a sign complied with code regulations, then the Commission would not need to review it.

Commissioner Stratis requested confirmation from the Fire Chief that what they are doing is to code.

The Commissioners requested additional information about battery and tire storage, the extent of the fence and what Tesla's requirements are, and information on the security cameras. The Commissioners generally expressed a preference for a fence that is not entirely solid, having employees park outside the fence area to make the area smaller, and amending the landscape plan subject to staff approval.

A **MOTION** was made by Commissioner Irwin and **SECONDED** by Commissioner Petrich to continue the public hearing for Z-24-2022 to December 5, 2022.

ROLL CALL VOTE was as follows:

AYES: 7 – Irwin, Petrich, Stratis, Morton, Parrella, Broline, and Trzupek
NAYS: 0 – None

MOTION CARRIED by a vote of 7-0.

IV. CORRESPONDENCE

Commissioner Petrich asked about the $29M permit on the report. Director Farrell confirmed it was the King-Bruwaert House renovation and addition project.

V. OTHER CONSIDERATIONS

A. PC-06-2022 Setting 2023 Plan Commission Meeting Dates

The Commission approved the proposed 2023 dates as presented. Plan Commission meetings will be held on January 16, February 6, February 20, March 6, March 20, April 17, May 1, May 15, June 5, June 19, July 17, August 7, August 21, September 18, October 2, October 16, November 6, November 20, December 4, and December 18 in 2023.

A **MOTION** was made by Commissioner Stratis and **SECONDED** by Commissioner Irwin to approve the 2023 Plan Commission meeting dates.

ROLL CALL VOTE was as follows:

AYES: 7 – Stratis, Irwin, Parrella, Petrich, Broline, Morton, and Trzupek
NAYS: 0 – None

MOTION CARRIED by a vote of 7-0.

VI. PUBLIC COMMENT

There was no other public comment.

VII. FUTURE MEETINGS

Director Farrell detailed the cases scheduled for the December 5th meeting.

The Commissioners asked about the right-of-way sign text amendment. Director Farrell stated that the Board's direction was to prohibit signs in the right-of-way except for those by governmental entities.

Commissioner Irwin asked about a previous zoning case and the sidewalk extension on County Line Rd., north of 87th Street. Director Farrell responded that she would have to research into it.

VIII. ADJOURNMENT

A **MOTION** was made by Commissioner Irwin and **SECONDED** by Commissioner Parrella to adjourn the meeting at 8:02 p.m.

ROLL CALL VOTE was as follows:

AYES: 7 – Irwin, Parrella, Stratis, Petrich, Broline, Morton, and Trzupek
NAYS: 0 – None

MOTION CARRIED by a vote of 7-0.

Respectfully Submitted: _____

Janine Farrell, AICP
Community Development Director

VILLAGE OF BURR RIDGE
A VERY SPECIAL PLACE

Z-25-2022/V-04-2022: 11731 87th Street (McNaughton Development LLC); Requests to rezone the property as per section VI.E of the Zoning Ordinance from the R-1 Single-Family Residence District to the R-2B Single-Family Residence District; variations for a Planned Unit Development (PUD) on a parcel measuring 15 acres with 585.5 ft. of lot width instead of the 40 acres and 800 ft. of lot width required as per section VI.E.3.b of the Zoning Ordinance; a special use for a PUD as per section VI.E.2 of the Zoning Ordinance; and Preliminary Plan approval of the PUD as per section XIII.L.2.c.

HEARING:
December 5, 2022

TO:
Plan Commission
Greg Trzupek, Chairman

FROM:
Janine Farrell, AICP
Community Development Director

PETITIONER:
John Barry of
McNaughton Development

PETITIONER STATUS:
Contract Purchaser

PROPERTY OWNER:
Greg Sauers of Frederick W. Sauers Trust

EXISTING ZONING:
R-1 Single-Family Residential

LAND USE PLAN:
Recommends Single-Family Residential

EXISTING LAND USE:
Single-Family Residential

SITE AREA:
±15 Acres

SUBDIVISION:
Not in a platted subdivision



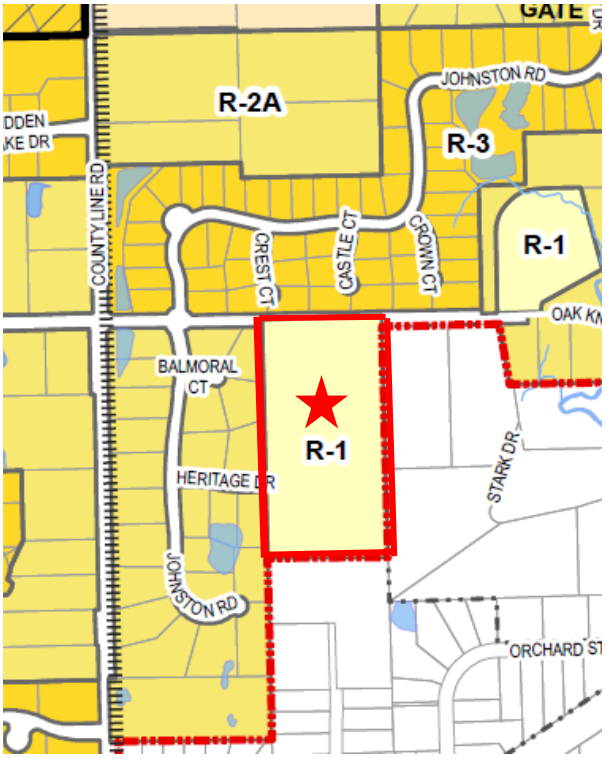

The petitioner, John Barry of McNaughton Development, is requesting a rezoning, special use, variations, Planned Unit Development (PUD), and preliminary plan approval of a PUD in order to develop the 15-acre parcel with 20 detached single-family homes. The proposed subdivision, called The Enclave of Highland Fields, is a cluster development targeted towards older individuals/empty-nesters seeking maintenance free living. The subdivision is not an age-restricted community according to the draft Covenants and Restrictions. The subdivision will be gated with access only from 87th St.

Below are brief details of the requested zoning actions:

- *Rezone from the R-1 Single-Family Residence District to the R-2B Single-Family Residence District:* The petitioner requests to change the underlying zoning of the property to the R-2B zoning district. The R-1 zoning district has a minimum lot area requirement of 5 acres and the R-2B zoning district has a minimum lot area requirement of 30,000 sq. ft. "The R-2B Single Family Residence District is intended to create a residential environment offering adequate lot area for the typical new home size in the Village while maintaining the open feeling of a large lot zoning district" (Zoning Ordinance section VI.E.). Additional analysis of the Comprehensive Plan and the zoning in the area follows.
- *Variations for a Planned Unit Development (PUD) on a parcel measuring 15 acres with 585.5 ft. of lot width instead of the 40 acres and 800 ft. of lot width:* In the R-2B zoning district, a PUD requires 40 acres of lot area and 800 ft. of lot width minimum. The subject site does not meet these requirements. In order for a PUD to be approved on the site, the variations must be approved first. The petitioner responded to the Findings of Fact for the variations, included in Exhibit A.
- *Special use for a PUD:* A PUD in the R-2B zoning district requires special use approval. A PUD is defined as "land…of a size sufficient to create its own environment, controlled prior to its development by a single landowner…to be developed as a single entity, the environment of which is compatible with adjacent land, and the intent of the zoning district or districts in which it is located; the developer or developers may be granted relief from specific land use regulations and design standards and may be awarded certain premiums in return for assurances of an overall quality of development, including any specific features which will be of exceptional benefit to the community as a whole" (Zoning Ordinance section XIV.B). A PUD provides developers flexibility in development and where certain aspects of the strict zoning district standards are varied in exchange for a public benefit. The petitioner responded to the Findings of Fact required for both a special use and a PUD, included in Exhibit A.
- *Preliminary Plan approval of the PUD:* Should the rezoning, variations, and special use for a PUD be approved, the petitioner is also requesting Preliminary Plan approval of the PUD. Approval of the preliminary plan is an approval of the concepts and details of the development, the general location of lots, open space, roads, etc. Within 60 days after preliminary plan approval by the Board of Trustees, the Final Plan must be submitted. Final Plan approval goes before the Board of Trustees only; the Board does have the ability to refer the plan to the Plan Commission if it deviates with the preliminary plan. Additional analysis of the Preliminary Plan follows.

Rezoning

Compliance with the Comprehensive Plan

The Village's Comprehensive Plan (as amended through 2007) designates this property as single-family residential on the Future Land Use Map. The proposal of single-family residential complies with the future land use envisioned for the property. The property is located within the German Church Road Subarea. The Comprehensive Plan states that "new development within this subarea should take on a specific residential character that is consistent with the lot sizes of surrounding developments such as Arrowhead Farm. It is also desirable that new residential subdivisions take advantage of the unique characteristics of the terrain. This suggests a need for a variety of lot sizes and the consideration of the transfer of density within a traditional subdivision development to preserve open space." For reference, Arrowhead Farm is zoned R-2A and the smallest lot size is 30,000 sq. ft. The Illustrative Concept Plan for the German Church Road Subarea envisions this parcel as an extension of the adjacent Highland Fields Subdivision to the west with 30,000+ sq. ft. lots. The R-2B zoning district minimum lot area requirement is 30,000 sq. ft.

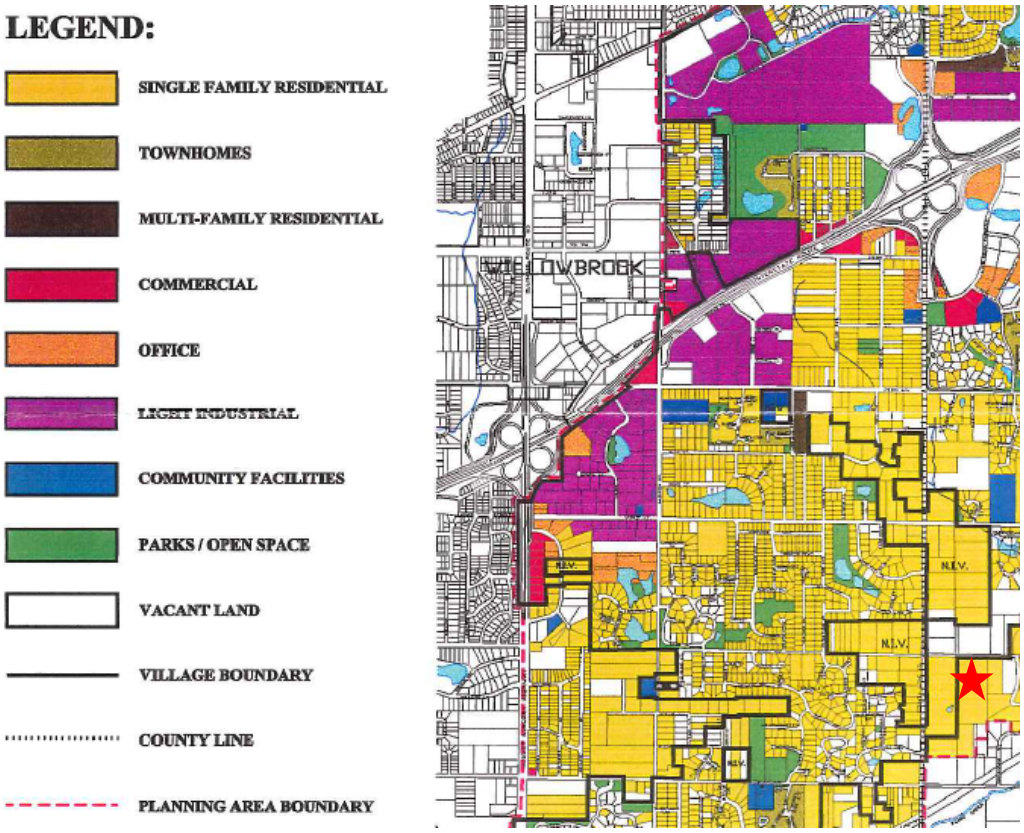

Comprehensive Plan Future Land Use Map

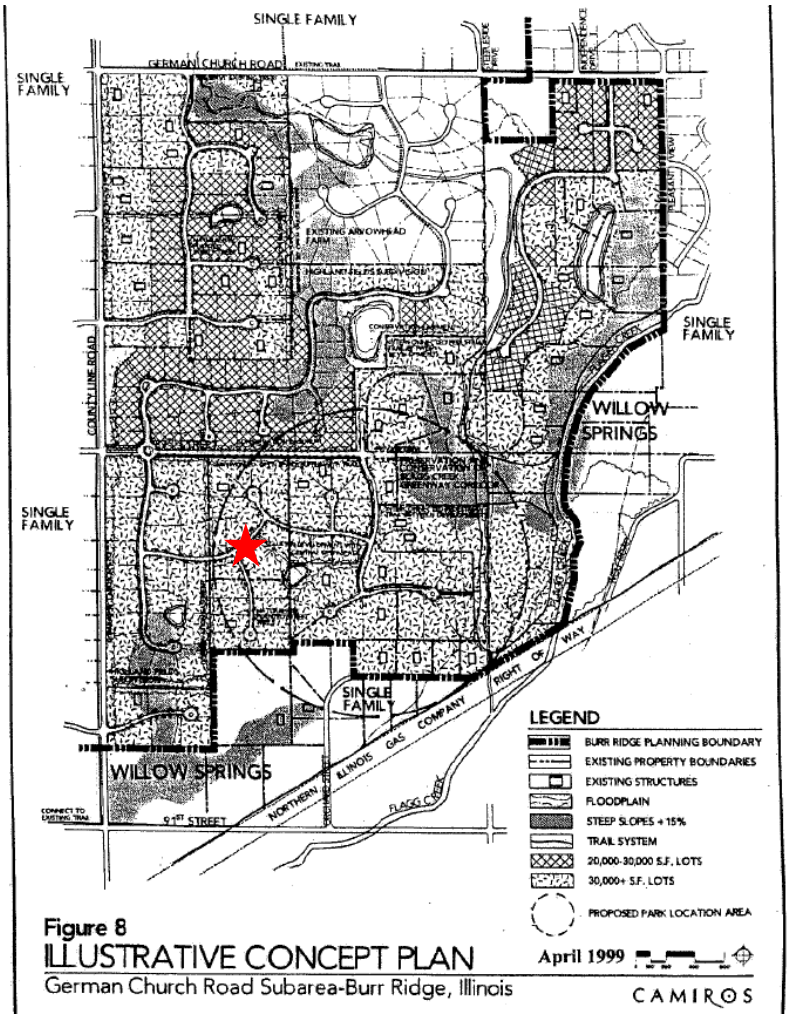

Comprehensive Plan Concept Plan for the German Church Road Subarea

Compatibility with Surrounding Zoning and Development

In addition to the Comprehensive Plan, a key factor in determining zoning for a property is the surrounding pattern of zoning and development. To the north and west of the property is the Highland Fields Subdivision, zoned R-3 to the north and R-2A to the west. For reference, the R-3 zoning district requires a minimum lot size of 20,000 sq. ft. and the R-2A zoning district requires a minimum lot size of 40,000 sq. ft. To the east are residential properties within unincorporated Cook County, zoned R-1 Single-Family Residence District; this zoning district requires a minimum lot size of 5 acres. To the south is the SR-1 Suburban Residence-Single Family District within the Village of Willow Springs; this zoning district requires a minimum lot size of 15,000 sq. ft. The nearest R-2B zoning districts are located a half-mile to the north along Greystone Rd., about 0.4 miles to the northwest on the southwest corner of 83rd Street and County Line Rd., and about 0.4 miles to the southwest near 91st and Drew Ave.

The trend in development in the area since the property was annexed in 2005 has been towards residential subdivision developments. To the north and west is the Highland Fields Subdivision. The Reserve of Willow Ridge within the Village of Willow Springs is located to the south of the

site. Four properties, three now developed for single-family residential, are not part of the Reserve of Willow Ridge and pre-date the subdivision. While the re-zoning of the subdivisions occurred prior to 2005, development was ongoing when the subject site was annexed.

Highland Fields consists of three phases: Highland Fields, 3-A, and 3-B. Final Plats of Subdivision for these phases were recorded in 2000, 2016, and 2018 respectively. The original portion of Highland Fields includes the portion to the north of 87th Street, zoned R-3, and fourteen lots to the south of 87th Street, zoned R-2A. Highland Fields 3-A and 3-B added an additional twelve lots zoned R-2A to the south of 87th Street. The earliest phase of Highland Fields was re-zoned in 1998 and the latest in 2003.

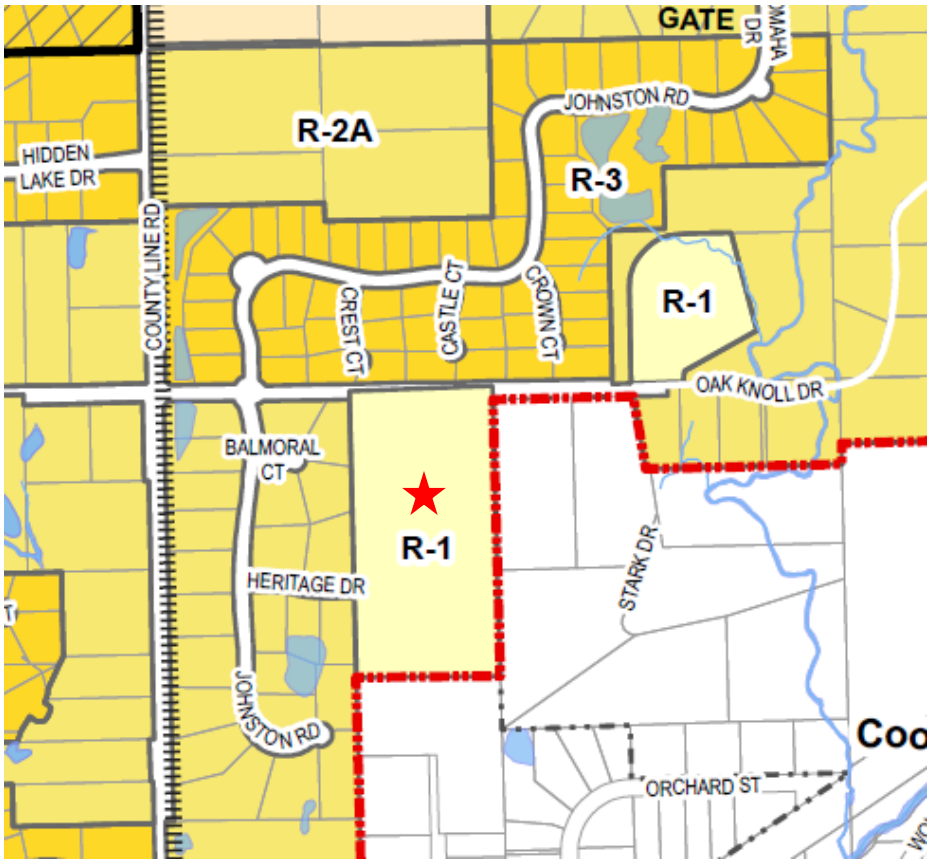

Zoning map of the area

Preliminary Plan

As part of preliminary plan submission for PUDs, the petitioner must provide the following in addition to the plan showing the layout of the PUD:

- Identify variations from the Subdivision and Zoning Ordinances
- Explanation of the character of the development
- Statement of ownership
- Development schedule
- Market analysis
- Covenants and Restrictions
- Density information

- Service facility information
- Architectural plans
- Landscape Plan
- Cost-revenue analysis
- Traffic analysis
- Environmental analysis

The petitioner has provided this information in Exhibit A.

Below are summary details of the preliminary plan, included as Exhibit A:

- 20 residential lots are proposed with three conservation outlots, one detention outlot, one outlot for the private road, and three outlots surrounding the homes functioning as common areas.
- Gross density is 1.31 units/acre, which equates to an average of 33,165 sq. ft. per lot overall.
- Net density (minus road, detention, and road dedication) is 1.76 units/acre, which equates to an average of 24,725sq. ft. per lot overall.
- Individual lot area is 4,560 sq. ft. each.
- The distance between lots is 16.2 ft. at the nearest point.
- A walking trail is proposed around the detention pond.
- An additional 11.5% more stormwater detention over the minimum requirement is being proposed.
- There are 834 trees on the site with 549 being preserved. The tree survey (included in Exhibit A) notes that some of the trees being preserved are decaying and one is dead. Staff recommends that the list be updated to reflect only the healthy trees which will remain.
- Deviations from the Zoning and Subdivision Ordinance standards:
    - A 100 ft. setback is required along 87th Street. A 40 ft. setback is being requested.
    - For the private road, Heritage Court, a 40 ft. setback is required. The lots are only setback 20.25 ft.
    - A 60 ft. street width is required, a 40 ft. width is proposed.
    - The minimum lot depth required is 130 ft., 80 ft. is proposed.
    - A sidewalk is only proposed on one side of the private road when it is required on both sides.
    - The cul-de-sac of Heritage Court exceeds the maximum length allowed of 500 ft., an 800 ft. cul-de-sac is being proposed.
- The following issues remain unaddressed after Village staff provided comments to the petitioner:
    - Heritage Drive to the west within the Highland Fields Subdivision was intended to continue through this parcel. If Heritage Drive does not continue through the property, Village staff requires the developer to terminate Heritage Drive on the subject site with a cul-de-sac. This is not depicted on the plan.
    - A 60 ft. road dedication is required, but only a 50 ft. dedication is shown on the plan.
    - The restrictor in the detention pond was not relocated per the Village Engineer's requirement.

Public Hearing History

Z-20-2022: The same petitioner, McNaughton Development, requested a rezoning from R-1 to R-3 in order to develop the site for a 20-lot subdivision. The rezoning was unanimously denied by the Plan Commission on July 18, 2022. The petition was later withdrawn before the Board of Trustees meeting.

Public Comment

Public comments received are included as Exhibit B.

Findings of Fact and Recommendation

Findings of fact have been provided, which the Plan Commission may adopt if in agreement with those findings. Should the Commission recommend approval of the requests to rezone the property as per section VI.E of the Zoning Ordinance from the R-1 Single-Family Residence District to the R-2B Single-Family Residence District; variations for a Planned Unit Development (PUD) on a parcel measuring 15 acres with 585.5 ft. of lot width instead of the 40 acres and 800 ft. of lot width required as per section VI.E.3.b of the Zoning Ordinance; a special use for a PUD as per section VI.E.2 of the Zoning Ordinance; and Preliminary Plan approval of the PUD as per section XIII.L.2.c, staff recommends the following conditions:

1. The Final Plan shall substantially comply with the Preliminary Plan as included in Exhibit A. Final Plan approval is subject to Zoning Ordinance section XIII.L.2.d.
2. Anti-motony architectural standards shall be incorporated into the final Covenants and Restrictions subject to staff review and approval.
3. The developer shall terminate Heritage Drive (located to the west in Highland Fields) on the subject site in a cul-de-sac, subject to staff review and approval.
4. A 60 ft. road dedication along 87th Street shall be provided.
5. An updated tree survey shall be submitted reflecting only the healthy trees which will remain.

Appendix

Exhibit A – Petitioner's Materials and Public Notifications

- Petition
- Owner consent
- Findings of Fact
- Zoning exhibit
- Rendering
- Site Plan
- Preliminary plan
- Preliminary engineering
- Tree survey
- Landscape plan
- AutoTurn exhibit

- Architectural elevations
- Traffic study
- Fiscal impact projections
- Market value report
- Development schedule
- Draft Covenants and Restrictions
- Zoning evaluation report
- Public notifications

Exhibit B – Public Comments

EXHIBIT A

VILLAGE OF BURR RIDGE

RECEIVED
OCT 24 2022
VILLAGE OF BURR RIDGE

PETITION FOR PUBLIC HEARING
PLAN COMMISSION/ZONING BOARD OF APPEALS

GENERAL INFORMATION (to be completed by Petitioner)

PETITIONER (All correspondence will be directed to the Petitioner): McNaughton Development, LLC

STATUS OF PETITIONER: CONTRACT PURCHASER

PETITIONER'S ADRESS: 115220 Jackson Street, Burr Ridge IL 60527

ADDRESS OF SUBJECT PROPERTY: 11731 W 87th Street, Burr Ridge IL 60527

PHONE: 630-325-3400

EMAIL: JOHNB@McNaughtonDevelopment.com

PROPERTY OWNER: Greg Sauers

PROPERTY OWNER'S ADDRESS: 1308 61st Street, LaGrange Highlands PHONE: 224-234-3436

PUBLIC HEARING REQUESTED: X Special Use X Rezoning ____ Text Amendment ____ Variation(s)

DESCRIPTION OF REQUEST:

Rezoning of 11731 W. 87th Street from R1 to R2B-PUD
Special use for a Planned Unit Development (PUD) &
Variation for lot area and lot width for a PUD in R-2B

PROPERTY INFORMATION (to be completed by Village staff)

PROPERTY ACREAGE/SQ FOOTAGE: +/- 15 acres EXISTING ZONING: R-1 / single family residential

EXISTING USE/IMPROVEMENTS: Residential / Detached single-family residence

SUBDIVISION: N/A

PIN(S) #: 23-06e-100-005-0000 &

The above information and the attached Plat of Survey are true and accurate to the best of my knowledge. I understand the information contained in this petition will be used in preparation of a legal notice for public hearing. I acknowledge that I will be held responsible for any costs made necessary by an error in this petition.

Petitioner's Signature

10/24/2022
Date of Filing

11731 W 87th Street
Burr Ridge, Illinois 60527
Enclave of highland Fields
Rezoning Findings of Fact
October 19, 2022

Existing uses of property within the general area of the property in question.

The majority of the annexed parcels within the village south of 83rd to Street 91st Street are either R3 or a substantially sized R4 PUD. Less dense R2 & R2A developments and existing mid-sized parcels exist within the County Line Road Corridor and within portions of the village that developed as well and septic developments and later annexed to the village.

The zoning classifications of the property within the general area of the property in question.

The property is contiguous to the Highland Fields development on two sides. Highland Fields to the north is zoned R3 and R2A to the west. The property to the south is incorporated and zoned SR2 Suburban Residential-Single Family within the village of Willow Springs. The property to the east is within unincorporated Cook County and is zoned Single Family Residence R1.

The suitability of the property in question to the uses permitted under the existing zoning classification.

The existing zoning classification of R1 which requires single family parcels of five acres is obsolete. A R1 five-acre lot subdivision would be impractical in light of current day land valuation, the availability and the costs to extend public utilities and current market trends in homeownership.

The trend of development, if any, in the general area of the property in question, including changes, if any, which have taken place in its present zoning classification.

The trend of development in the general area is for single family residential product. The R3 and the R4 PUD developments within general areas are developed subdivisions with full suburban improvements including such items as sewer, water, and subdivision streets improved with curb and gutter. The less intense zoning districts, such as R2 & R2A, within the general area are typically former county developments that later annexed to the village in order to connect to public utilities and mid-sized parcels generally along County Line Road and west along 87th Street. The southern portion of Highland Fields would be an exception however, it is within the County Line Road Corridor and the development did not include full internal right-of-way improvements.

The impact upon the objectives of the Official Comprehensive Plan of the Village of Burr Ridge, as amended.

If amended, the proposed R2B PUD zoning district, with an age-targeted cluster product, will result in an overall high quality suburban development with substantial preserved natural spaces and a low density that will enhance the surrounding neighborhoods and be within the character of the overall community.

Findings of Fact For a Planned Unit Development (PUD) Village of Burr Ridge Zoning Ordinance

Section XII.L.7 of the Village of Burr Ridge Zoning Ordinance requires the following findings for a request for a Planned Unit Development (PUD). The petitioner must respond to and confirm each one of these findings by indicating the facts supporting such findings. These findings of fact evaluate in what respects the proposal would or would not be in the public interest.

a. In what respects the proposed plan is or is not consistent with the stated purpose of the planned unit development regulations.

Response: The proposed plan provides 20 units of clustered housing with a target market consisting of more mature individuals and couples seeking a more maintenance free living arrangement. The clustered development minimizes the burden of landscape maintenance with larger areas of open space in common ownership maintained by a Homeowner's Association rather than by individuals on larger lots. This housing type is attractive to empty nesters and professionals looking to downsize and remain in the community and provides a housing option not currently available in large numbers in Burr Ridge. The provision of this housing type and the proposed clustered site plan on a heavily wooded parcel that preserves natural areas, site topography and drainage patterns is in the public interest, and would not otherwise be permitted pursuant to the Burr Ridge Zoning Ordinance but for Planned Unit Development approval. Consistent with the stated purposes of Planned Unit Development the proposed plan:

1. Provides a choice in housing type available to the public by allowing development that would not be possible under the strict application of other sections of this Ordinance;
2. Permanently reserves heavily wooded open space;
3. Permits the preservation of green space, natural vegetation, topographic and geological features by employing a clustered development prototype;
4. Employs a creative approach to the use of land and related physical facilities which results in better urban design, and the provision of aesthetic amenities.
5. Allows the efficient use of land, so as to provide an economic benefit by allowing development on a heavily wooded sloping site that would otherwise be difficult to improve, thus increasing the tax base of the Village without significant additional burden on Schools or other Village services.
6. Provides innovation in development so that the growing needs and demands of the population may be met by a greater variety in type, design, and layout of housing, and by conservation and more efficient use of open space ancillary to said buildings and structures, all in a manner so as to be consistent with the character of the zoning district in which the planned unit development is located.

In these respects the proposed plan is consistent with the stated purpose of the planned unit development regulations.,

b. The extent to which the proposed plan meets the requirements and standards of the planned unit development regulations.

Response: With respect to the standards for residential planned unit developments regarding minimum lot area and width, the lot area for single-family detached dwellings may not be less than an average of 16,000 square feet with no lot having an area of less than 14,000 square feet, except in a cluster-type lot arrangement, the minimum lot area may be reduced. As the proposed development is a clustered development, the minimum lot size is reduced to generally 4,500 square feet. Lot area per dwelling unit for the entire site will be 33,168 square feet.

With respect to Floor Area Ratio for residential planned unit developments, the maximum allowed is 0.20. With a net site area of 492,549 square feet (gross -roads and detention), a total of 98,510 square feet or 4,925 square foot per lot is allowed. Seven different models are proposed for the subject property. Total floor area for the seven different models range from 2,134 square feet to 3,419 square feet. The maximum F.A.R. on the site would be 0.13 if the largest model were chosen on each of the 20 building lots. Since a mix of models is expected the actual F.A.R. achieved will likely be less than the maximum of 0.13 and less than the maximum 0.20 allowed by ordinance.

With respect to yards in residential planned unit developments, perimeter yards are required according to the underlying zoning District Regulations. For the R2B District 100' yards are required along the 87th Street and south property lines and 40' interior side yards are required. Current plans accommodate the required 40' side yards and a 100' south property line yard, however relief is requested from the front lar setback with only 25.5 feet provided. Single-family clustered dwellings are required to have 40' font yards, 10'side yards and 30' rear yards. Front yards of ±25'feet are provided with more than 10' separation (combined side yards)between buildings and ample rear yards that exceed the 30' requirement.

With respect to building height in residential planned unit developments, the maximum allowed is 30'. Proposed building prototypes do not exceed that 30' limit with maximum heights ranging from 19'-4" to 26'-9".

With respect to the dwelling unit minimum floor areas all units proposed exceed the minimum unit sizes prescribed with all 2 bedroom units exceeding 1,200 s.f., all 3-bedroom units exceeding 1,600s.f., and all 4+ -bedroom units exceeding 1,900 s.f. with an additional 300 s.f. for any additional bedrooms.

Required parking will comply with the standards Section IX with two parking spaces per dwelling unit provided.

Finally, the requirements for Designation of Common Open Space are satisfied with over 34% (5.25 acres) designated and being located more than 20 feet away from buildings and walkways and minimum dimensions far exceeding the 50' minimum.

c. The extent to which the proposed plan departs from the zoning and subdivision regulations otherwise applicable to the subject property, including but not limited to, the density, dimension, area, bulk, and use, required improvements, construction and design standards and the reasons why such departures are or are not deemed to be in the public interest.

Response: With respect to the Zoning Ordinance Standards, the subject property is located in the R2B District. With respect to allowed uses §VI-E-2(h) authorizes Planned Unit Developments as a Special Use. Minimum lot standards for Planned Unit Developments are established in §VI-E-3(b) requiring a minimum lot area of 40 acres and minimum lot width of 800 feet. The subject property requires a variation from this standard with a gross lot area of 15.23 acres and lot width of 585.5 feet. This departure from the R-2B minimum lot area and width standards is in the public interest because it is the only means to allow cluster type developments and certain housing types attractive to an aging demographic. As the Village of Burr Ridge approaches near full build out of available land, no parcels greater than 15 acres exist let alone those approaching 40 acres.

§VI-E-4 establishes 0.20 maximum Floor Area Ratio (F.A.R.). For Planned Unit Developments, F.A.R. is calculated gross floor area ÷ net site area. The site plan anticipates a variation in the building prototypes with up to six different plan/elevation configurations and anti-monotony guidelines ensuring a mix of unit sizes and material choices. That said, the maximum F.A.R. for the subject would be is 0.13 if all sites were improved with the largest prototype which complies with this standard.

§VI-E-5 establishes a Maximum Height of 1.5 stories and 30 feet. The proposed building prototypes comply with this standard with a maximum height of 26'-9".

§VI-E-6 establishes a Minimum Ground Floor Area Per Dwelling of 1,200 s.f. for multi-story buildings. With minimum building footprints of ranging from 1,982 square feet to 2,476 square feet the proposed prototypes meet this standard.

§VI-E-7(b) establishes perimeter setbacks for Planned Unit Developments of 100' (front) 40' (side) and 100' (rear). The proposed plan requires relief from the front yard setback along 87th Street with a proposed setback of 40.25 feet.

§VI-E-8 references the parking standards in §XI Off-Street Parking and Off-Street Loading requiring 2 parking spaces per dwelling unit. The proposed prototypes include 2-car garages and thus this standard is met.

Regarding Subdivision Ordinance standards, relief is requested from the following:
Section VII.C.8.a: Cul de sac Street maximum length 500' (±800' proposed), maximum 15 lots (20 lots proposed). Initial plans called for a gated connection to existing Heritage Dr. to the west. After discussions with staff, it was decided a better solution would be to create a Cul de sac and provide emergency and utility access via an 18' access road. This is in the public interest in that it minimizes the potential for thru traffic affecting the adjacent subdivision to the west.
Section VII.D.Table VII-A: local street right-of-way width 60 ft (private street held to the same standard as public), 40' proposed; The more narrow right -of-way provides adequate access for both residents and service/emergency vehicles while allowing the maximum amount of wooded area to the east to be preserved all in the public interest.
Section VII.G.2 minimum lot depth of 130' required, clustered lots as indicated on plans are 80' in depth. As was the case with the reduced in right-of-way, minimizing lot depths allows a greater amount of wooded natural area to be preserved all in support of the public interest.
Section VIII.I.1 sidewalks must be provided on both sides of the street. By providing a sidewalk on only the east side of the proposed street a reduction in right-of-way is possible, which, as mentioned earlier

allows the maximum amount of wooded natural areas to be preserved all in the public interest.

d. ***The extent of public benefit produced, or not produced, by the planned unit development in terms of meeting the planning objectives and standards of the Village. Any specific beneficial actions, plans or programs agreed to in the planned unit development proposal which are clearly beyond the minimum requirements of this Ordinance shall be specifically listed as evidence of justified bulk premiums and/or use exceptions.***

Response: The improvement of the subject property with a clustered residential development providing a housing type attractive to Burr Ridge's aging population provides a public benefit by allowing "empty nesters" to remain in the community where they raised their families and continue to shop and patronize local businesses with which they are familiar. Preservation of wooded areas and natural drainage patterns and topography also provides public benefit. The proposed development plan is consistent with gross densities allowed in the R2B District and no additional Floor Area Ratio is requested thus no bulk premiums are requested . The relief requested is to allow a clustered configuration that minimizes impact on natural wooded areas and site topography. That said, the proposed storm management facilities on site are designed to accommodate ±11.5% more capacity than required by ordinance providing public benefit for downstream properties.

e. ***The physical design of the proposed plan and the manner in which said design does or does not make adequate provision for public services, provide adequate control over vehicular traffic, open space and further the amenities of light and air, recreation and visual enjoyment.***

Response: The physical design of the proposed plan provides adequate access via a private roadway and storm management facilities that provide excess capacity. A traffic study authored by KLOA indicates no negative impacts on the adjacent roadway network and minimizes impacts on the adjacent subdivision to the west. The clustered design scheme preserves significant areas of natural woodlands and natural drainage patterns and topography and provides open space that furthers the amenities of light, air recreation and visual enjoyment within the proposed subdivision and for the broader neighborhood.

f. ***The relationship and compatibility, beneficial or adverse, of the proposed plan to the adjacent properties and neighborhood.***

Response: The proposed plan for a residential clustered development is compatible with adjacent residential uses and is well buffered through the preservation natural wooded areas. Preserving woodlands, natural drainage patterns and topography and minimizing impacts on existing natural areas is beneficial to adjacent properties and the neighborhood as well. It maintains an orderly pattern of development consistent with the broader policies of the Burr Ridge Comprehensive Plan

and allows an underdeveloped property to be brought to a more efficient use.

g. The desirability of the proposed plan to the Village's physical development, tax base and economic well-being.

Response: The development of the subject property with a residential use consistent with the German Church Road Sub-area of the Villages Comprehensive Plan fulfills the Village's vision for development of its southeastern extremity. Given the target demographic of the housing product, impact on Village/Community services such as schools, police, fire and EMS services are anticipated to be minimal with significant gains from property tax revenues for all taxing bodies indicated in the Applicant's Financial Impact Analysis. The ability to make available housing options desirable to the Villages' aging population allowing them to remain in Burr Ridge also provides economic benefit to the community at large. All of these attributes are desirable to the Village's physical development as well as its tax base and economic well-being.

h. The conformity with the recommendations of the Official Comprehensive Plan as amended, and all other official plans and planning policies of the Village of Burr Ridge.

Response: The Village of Burr Ridge Comprehensive Plan was drafted in 1999 and can be considered out of date with respect to current housing development trends. The proposed site is located within the German Church Road subarea, bordered by German Church Road to the north and County Line Road to the east. At the time of the adoption of the Comprehensive Plan, this area had not yet been annexed into Burr Ridge, but continued residential development of this area is identified as a common goal between the Villages of Willow Springs and Burr Ridge (Comprehensive Plan p. 19). The Comprehensive Plan specifies that:

"New development within this subarea should take on a specific residential character that is consistent with the lot sizes of surrounding developments such as Arrowhead Farm" (Comprehensive Plan p. 19)

The plan goes on to state:

"The preferred approach in the German Church Road subarea is a mix of lot sizes, averaging 30,000 square feet in size, organized in a typical subdivision format. Larger lot subdivisions will also be encouraged. This site planning approach is reflected by the currently proposed Highland Fields development." (Comprehensive Plan p. 19)

The two referenced subdivisions are developed at ±1.0 DU/ac. gross densities. The largest subdivision constructed after the 1999 Comprehensive Plan is the subdivision immediately north of the subject property, developed to a 1.27 DU/ac. gross density, which is substantially similar the

proposed gross density on the subject property.

Burr Ridge's Comprehensive Plan also stresses the importance of new developments taking into consideration pre-existing natural resources, such as woodlands and open spaces, and topographical and floodplain.

"Future residential developments should maintain, preserve, and create additional wooded areas and other natural features, giving special consideration of topographical and floodplain conditions." (Comprehensive Plan p. 18)

The plan recommends that development that considers existing topographical and natural resources into its designs be allowed a transfer of density to protect existing natural resources:

Innovative design for residential site development that is sensitive to existing topography and natural features should be encouraged. In certain instances, the Village will consider allowing a transfer of density to achieve such development" (Comprehensive Plan p. 18)

"It is also desirable that new residential subdivisions take advantage of the unique characteristics of the terrain. This suggests a need for a variety of lot sizes and the use of transfer of density within a traditional subdivision to preserve open space" (Comprehensive Plan p. VII & p. 28)

Given the site plan of the proposed development, and the preserved natural areas along with the generally compatible gross density, the proposed development is consistent with the official Comprehensive Plan of the Village of Burr Ridge.

i. Conformity with the standards set forth in Section XIII.K.7 of this Ordinance.

XIII.K.7: Special Use <u>Standards</u> No special use shall be recommended by the Plan Commission or approved by the Village Board unless it is found that:

1. The use meets a public necessity or otherwise provides a service or opportunity that is not otherwise available within the Village and is of benefit to the Village and its residents.

Response: The proposed use is a well-designed cluster development set within an existing natural environment that will preserve existing vegetation in the form of dedicated conservation areas, while adding other community features, including walking paths. Site engineering is designed to preserve existing natural topography, and drainage patterns and storm management facilities on-site are designed to exceed standards by ±11.5%, providing additional benefit to the downstream neighbors by controlling presently unrestricted storm water runoff.

The proposed development and its lower-maintenance housing product is designed to appeal to empty nesters wishing to continue living in the area, fulfilling a growing need that is largely unmet in Burr Ridge and surrounding suburbs.

Given the foregoing, the proposed use meets a specific public necessity and will be a benefit to the Village and its residents.

2. The establishment, maintenance, or operation of the special use will not be detrimental to, or endanger the public health, safety, morals, comfort, or general welfare.

Response: The proposed development will minimize the impact on natural areas and is well-separated from existing development. Setbacks within the development allow adequate an adequate supply of light and air, while preserving views to natural wooded areas of the site. Density is consistent with surrounding development and, according to a traffic study prepared by KLOA, no substantial impact on the surrounding street system is anticipated. Site engineering is designed to preserve natural topography and drainage patterns and storm management facilities on-site are designed to exceed design standards. The proposed development and its open space areas will be maintained in a consistent manner, which will benefit both property owners within the development itself and in the surrounding neighborhood.

Given the foregoing, the proposed development will not be detrimental to, or endanger the public health, safety, morals, comfort, or general welfare.

3. The special use will not be injurious to the uses and enjoyment of other property in the immediate vicinity for the purposes already permitted, nor substantially diminish or impair property values within the neighborhood in which it is to be located.

Response: The proposed development will result in a well-designed cluster development that will preserve substantial portions of the existing natural environment, unlike more traditional residential development. This preservation will serve to maintain the existing character of the subject property and its surroundings. Other improvements associated with the proposal will provide additional benefits, such as those associated with stormwater management.

An analysis prepared by Argianas & Associates found that no measurable value diminution of conventional single-family detached residential development located within the subject area is anticipated due to the construction of a cluster development such as the proposed development.

Given the foregoing, the proposed development will not be injurious to the uses and enjoyment of other property in the vicinity, nor will it diminish or impair property values within the neighborhood in which it is located.

4. The establishment of the special use will not impede the normal and orderly development and improvement of the surrounding property for uses permitted in the district.

Response: The subject property is in an area dominated by low- to moderate-density**,** detached single-family residential development zoned either R2A/B or R3 with gross densities ranging from ±1.0 to ±1.3 dwelling units per acre. The anticipated density of the proposed development is consistent with those densities at 1.31 dwelling units per acre. The gross density is substantially similar to the adjacent development to the north and south of the subject property.

The clustered development scheme preserves significant areas of natural open space consistent with the character of surrounding developed and un-developed land. In this case, a conventional development would require clear-cutting the site, and would not be in character with the surrounding neighborhood or locality.

Given the foregoing, the proposed development will not impede the normal and orderly development of surrounding property but will in fact be complimentary to existing and future uses.

5. Adequate utilities, access roads, drainage and/or necessary facilities have been or will be provided.

Response: Adequate utilities to serve the subject property are in place, and all necessary utility work

on the subject property itself will be designed to meet all required standards. An access road connecting the proposed development to 87th Street will be provided and as described in more detail in response to the following standard, is designed to adequately accommodate the proposal and minimize congestion. Drainage patterns and storm management facilities on-site are designed to exceed standards by ±11.5%, providing additional benefit to the downstream neighbors by controlling presently unrestricted storm water runoff. Therefore, adequate utilities, access roads, and drainage will be provided to support the proposed development.

6. Adequate measures have been or will be taken to provide ingress and egress so designed as to minimize traffic congestion in the public streets.

Response: Access to the proposed use is provided by a single internal roadway, Heritage Drive, which will connect the development to 87th Street. Heritage Drive terminates in a cul-de-sac and, as such, vehicles accessing the development will not pass through existing neighborhoods at the periphery of the site.

A traffic study prepared by KLOA concluded that the development is well-located with respect to the area roadway system, that traffic generated by the proposal can be accommodated by existing area roadways and will not have a significant impact on adjacent intersections, and that the proposed access roadway is projected to operate at a good level of service and will be adequate to efficiently accommodate the proposal.

Given the foregoing, adequate measures have been taking to minimize traffic congestion in the public streets.

7. The proposed special use is not contrary to the objectives of the Official Comprehensive Plan of the Village of Burr Ridge as amended.

Response: The Village of Burr Ridge Comprehensive Plan was drafted in 1999 and can be considered out of date with respect to current housing development trends. The proposed site is located within the German Church Road subarea, bordered by German Church Road to the north and County Line Road to the east. At the time of the adoption of the Comprehensive Plan, this area had not yet been annexed into Burr Ridge, but continued residential development of this area is identified as a common goal between the Villages of Willow Springs and Burr Ridge ***(Comprehensive Plan p. 19).*** The Comprehensive Plan specifies that:

"New development within this subarea should take on a specific residential character that is consistent with the lot sizes of surrounding developments such as Arrowhead Farm" ***(Comprehensive Plan p. 19)***

The plan goes on to state:

"The preferred approach in the German Church Road subarea is a mix of lot sizes, averaging 30,000 square feet in size, organized in a typical subdivision format. Larger lot subdivisions will also be encouraged. This site planning approach is reflected by the currently proposed Highland Fields development." ***(Comprehensive Plan p. 19)***

The two referenced subdivisions are developed at ±1.0 DU/ac. gross densities. The largest subdivision constructed after the 1999 Comprehensive Plan is the subdivision immediately north of the subject property, developed to a 1.27 DU/ac. gross density, which is substantially similar the proposed gross density on the subject property.

Burr Ridge's Comprehensive Plan also stresses the importance of new developments taking into consideration pre-existing natural resources, such as woodlands and open spaces, and topographical and floodplain.

"Future residential developments should maintain, preserve, and create additional wooded areas and other natural features, giving special consideration of topographical and floodplain conditions." ***(Comprehensive Plan p. 18)***

The plan recommends that development that considers existing topographical and natural resources into its designs be allowed a transfer of density to protect existing natural resources:

Innovative design for residential site development that is sensitive to existing topography and natural features should be encouraged. In certain instances, the Village will consider allowing a transfer of density to achieve such development" ***(Comprehensive Plan p. 18)***

"It is also desirable that new residential subdivisions take advantage of the unique characteristics of the terrain. This suggests a need for a variety of lot sizes and the use of transfer of density within a traditional subdivision to preserve open space" ***(Comprehensive Plan p. VII & p. 28)***

Given the site plan of the proposed development, and the preserved natural areas along with the generally compatible gross density, the proposed development is not contrary to the official Comprehensive Plan of the Village of Burr Ridge, but is, in fact, highly consistent with it.

8. The special use shall, in all other respects, conform to the applicable regulations of the district in which it is located, except as such regulations may, in each instance, be modified pursuant to the recommendations of the Plan Commission or, if applicable, the Zoning Board of Appeals.

Response: Apart from the requested variation and planned development deviations associated with the application for the proposed development, the proposed development will conform to all other applicable standards of the district in which it is located. Additional details on the variation and deviations are provided in the relevant sections of this submittal.

Findings of Fact - Zoning Variation Burr Ridge Zoning Ordinance

Address: _____

As per Section XIII.H.3 of the Village of Burr Ridge Zoning Ordinance, for a variation to be approved, the petitioner must confirm all of the following findings by providing facts supporting such findings.

a. Because of the particular physical surroundings, shape, or topographical conditions of the specific property involved, a particular hardship to the owner would result, as distinguished from a mere inconvenience, if the strict letter of the regulations were to be carried out

Response: The request for a variation from the minimum area requirement for A PUD is due to the fact that the subject property is only 15.22 acres where the minimum area requirement for the R2B Zoning District is 40 acres. Due to the presence of significant tree cover on the site, and its sloping nature, much of the land to the south and east on the site is difficult and costly to clear, fill and develop. In order to preserve these natural areas and efficiently develop the property, a cluster development is necessary, concentrating developable area to the west and north on the property. The only manner in which a cluster development may be approved is via a PUD. Given the foregoing, the site size, topography and wooded nature constitute a legitimate hardship to the owner, prohibiting conventional development that could be approved and financed under R2B zoning if the strict letter of the regulations were to be carried out.

b. The property in question cannot yield a reasonable return if permitted to be used only under the conditions allowed by the regulations governing the zoning district in which it is located.

Response: Given the sloping nature of the site and the presence of significant tree stands the cost of clearance and site preparation to accommodate a conventional R2B development scheme and the less efficient layout resulting in only 12 developable lots makes conventional development financially unfeasible.

c. The conditions upon which an application for a variation is based are unique to the property for which the variance is sought, and are not applicable, generally, to other property within the same zoning classification.

Response: The site's topography and vegetation are rare and unique to the subject property and cause a legitimate practical difficulty generally not applicable to other property within the same zoning classicfacation.

d. ***The purpose of the variation is not based primarily upon a desire to increase financial gain.***

Response: The purpose of the variation is to allow a site development scheme that preserves existing natural areas and vegetation on the subject property while improving the developable areas of the site with a financially feasible, lower-maintenance housing product attractive to a growing target market of empty nesters wishing to continue to live in Burr Ridge. The development plan does not seek additional density nor floor area beyond that consistent with the R2B Zoning District. The gross densities proposed allow for a minimum of 33,168 square feet of lot area per dwelling unit which is consistent with the minimum of 30,000 square feet of lot area per dwelling unit in the R-2B zoning District. The development scheme seeks only to take advantage of the site planning flexibility afforded by Planned Unit Developments to execute a clustered development scheme that preserves significant woodland areas and natural drainage patterns and topography.

e. ***The alleged difficulty or hardship is caused by this Ordinance and has not been created by any persons presently having an interest in the property.***

Response: The site slope, size, and vegetation, which is the cause of the practical difficulty or hardship was not created by the applicant or any person having an interest in the property.

f. ***The granting of the variation will not be detrimental to the public welfare or injurious to other property or improvements in the neighborhood in which the property is located.***

Response: The granting of the proposed variation to allow a PUD on a site less than 40 acres will not be detrimental to the public welfare or injurious to other nearby property or improvements. The proposed variation will allow a well-designed cluster development that preserves significant site vegetation and natural character and provides storm management facilities which exceed minimum standards by ±11.5% providing downstream benefits. According to a traffic study prepared by KLOA, no significant negative impacts on the surrounding road network are anticipated and according to an analysis prepared by Argianas & Associates, no negative impact on nearby conventional single-family detached residential development is anticipated by the construction of a cluster development. Given the foregoing, the granting of the variance will not be detrimental to the public welfare or injurious to other property or improvements in the neighborhood in which the property is located.

g. The granting of the variation will not alter the essential character of the neighborhood or locality.

Response: The subject property is located in an area dominated by low to moderate density detached single-family residential development zoned either R-2A/B or R-3 with gross densities ranging from ±1.0 to ±1.3 dwelling units per acre. The anticipated density of the proposed development is consistent with those densities at 1.31 DU/ac. The gross density similar to the adjacent development to the north and south of the subject property. The clustered development scheme preserves significant areas of natural open space consistent with the character of surrounding developed and un-developed land. In this case a conventional development which would essentially require clear-cutting the site and would not be in character with the surrounding neighborhood or locality. Given the foregoing, granting the variation ot allow a clustered PUD on the subject property will not alter the essential character of the neighborhood or locality.

h. The proposed variation will not impair an adequate supply of light and air to adjacent property or substantially increase the congestion of the public streets, or increase the danger of fire, or impair natural drainage or create drainage problems on adjacent properties, or endanger the public safety, or substantially diminish or impair property values within the neighborhood.

Response: The proposed variation will allow a well-designed clustered development that minimizes impact on natural areas and is well separated from existing development. Setbacks within the development allow adequate light and air while preserving views to natural wooded areas of the site. Density is consistent with surrounding development and according to a traffic study prepared by KLOA, no substantial impact on the surrounding street system is anticipated. Site engineering is designed to preserve natural topography and drainage patterns and storm management facilities on-site are designed to exceed standards by ±11.5 %. As mentioned earlier, an analysis performed by Argianas & Associates indicates no negative impact on property values due to proximity to clustered developments. Given the foregoing, the proposed variation will not impair an adequate supply of light and air to adjacent property or substantially increase the congestion of the public streets, or increase the danger of fire, or impair natural drainage or create drainage problems on adjacent properties, or endanger the public safety, or substantially diminish or impair property values within the neighborhood.

i. The proposed variation is consistent with the official Comprehensive Plan of the Village of Burr Ridge and other development codes of the Village.

Response: The Village of Burr Ridge Comprehensive Plan was drafted in 1999 and is considered out of date with respect to current housing and development trends. That said, with regard to the plan, the proposed site is located within the German Church Road subarea, bordered by German Church Rd to the north and County Line Rd to the east. At the time the Comprehensive Plan was adopted this area had not yet been annexed by Burr Ridge, but the continued residential development of this area is identified as a common goal between the Villages of Willow Springs and Burr Ridge ***(Comprehensive Plan p. 19).*** The Comprehensive

Plan specifies that:

> *"New development within this subarea should take on a specific residential character that is consistent with the lot sizes of surrounding developments such as Arrowhead Farm"* ***(Comprehensive Plan p. 19)***

The plan goes in to state:

> *"The preferred approach in the German Church Road subarea is a mix of lot sizes, averaging 30,000 square feet in size, organized in a typical subdivision format. Larger lot subdivisions will also be encouraged. This site planning approach is reflected by the currently proposed Highland Fields development."* ***(Comprehensive Plan p. 19)***

The two referenced subdivisions are developed at ±1.0 DU/ac. gross densities. The largest subdivision constructed subsequent to the 1999 Comp Plan is the subdivision immediately north of the subject property developed to a 1.27 DU/ac. Gross density which is substantially similar the proposed gross density on the subject property.

Burr Ridge's Comprehensive Plan also stresses the importance of new developments taking the pre-existing natural resources, such as woodlands and open spaces, and topographical and floodplain conditions into consideration (Comprehensive Plan p. 18).

> *"Future residential developments should maintain, preserve, and create additional wooded areas and other natural features, giving special consideration of topographical and floodplain conditions."*

The plan recommends that developments that consider existing topographical and natural resources in their designs be allowed a transfer of density in order to protect the existing natural resources:

> *Innovative design for residential site development that is sensitive to existing topography and natural features should be encouraged. In certain instances, the Village will consider allowing a transfer of density to achieve such development"* ***(Comprehensive Plan p. 18)***
>
> *"It is also desirable that new residential subdivisions take advantage of the unique characteristics of the terrain. This suggests a need for a variety of lot sizes and the use of transfer of density within a traditional subdivision to preserve open space"* ***(Comprehensive Plan p. VII & p. 28)***

Given the site plan of the proposed development and the preserved natural areas along with the generally compatible gross density, the granting of the variation to allow a PUD on the subject property is consistent with the official Comprehensive Plan of the Village of Burr Ridge and other development codes of the Village.

September 23, 2022

Ms. Janine Farrell
Community Development Director
7600 S. County Line Road
Burr Ridge, Illinois 60527

RE: 11731 W. 87th Street, Burr Ridge

Dear Janine

As trustee for the Frederick W. Sauers Trust please accept this letter as our authorization for McNaughton Development to file an application for the rezoning of the trust's property at 11731 W. 87th Street.

If you have any questions, please feel free to contact me.

Thank you.

Sincerely,

Greg Sauers
Trustee
224-234-3436

ZONING BOARD OF APPEALS

Consent to Install Public Notice Sign

The owner of the property referenced below, or an authorized representative of the owner, which is the subject of a public hearing before the Village of Burr Ridge Plan Commission or Zoning Board of Appeals, hereby consents to allow the Village of Burr Ridge to install a public notice sign on the aforesaid property. The public notice sign will be erected 15 to 30 days prior to the public hearing and will remain on the property until it is removed by the Village of Burr Ridge subsequent to a final dispensation of petition request.

Street Address of Subject Property: 11731 W. 87th Street

Property Owner or Petitioner: Grey Sauers
(Print Name)

(Signature)


Nov 18, 2022 at 10:29:15 AM
11731 W 87th St
Burr Ridge IL 60527
United States
NOTICE

ZONING EXHIBIT

ENCLAVE of HIGHLAND FIELDS

BURR RIDGE, IL



McNaughton DEVELOPMENT, LLC

YOUR LUXURY HOME BUILDER

NORTH



SITE PLAN DATA

TOTAL AREA	15.2 Acres (+/-)
PROPOSED ZONING	R-2B P.U.D.
ROADWAY DEDICATION (87th St.)	0.7 Acres
TOTAL OPEN SPACE	6.8 Acres (45%)
DETENTION AREA	1.7 Acres (11%)
CONSERVATION AREA	5.1 Acres (34%)
TOTAL HOMES:	20
BUILDING SETBACK	
Property Line	40' min.
Front Yard	20' min.
Side to Side	16' min.
Rear to Side	60' min.
Average Side to Side @ Mid-point	32.6'

NORTH

0' 25' 50' 100'

This plan was prepared to illustrate the development potential for the site. As a Site Plan, it is conceptual in nature. Therefore, all dimensions are subject to verification and the Site Plan is subject to modification pending final planning, engineering, architecture and municipal approval.

McNaughton DEVELOPMENT, LLC
YOUR LUXURY HOME BUILDER

© Copyright 2020 all rights reserved. The design and any and all ideas contained herein are the sole property of Metz & Company. Any reproduction of the design or the concept embodied herein in any form, in whole or in part, without consent from Metz & Company is prohibited.

If this plan is not 24" x 36" in size, then it is a reproduction that may not be to scale

REVISIONS

6. Final Engineering Design	10-10-22
5. Client Review Comments	08-25-22
4. Client Review Comments	08-22-22
3. Client Review Comments	08-15-22
2. Client Review Comments	08-11-22
1. Client Review Comments	08-08-22

ENCLAVE OF HIGHLAND FIELDS

11731 W. 87th STREET
BURR RIDGE, ILLINOIS

SEAL:

METZ & COMPANY
LANDSCAPE ARCHITECTURE/SITE PLANNING
826 East Maple Street
Lombard, Illinois 60148
PH: 630.561.3903
www.metz-company.com

TITLE
CONCEPTUAL
SITE PLAN

PROJECT NO.:
21-171
DATE: 10-20-2022
SCALE: 1"=50'

SHEET
SP-1

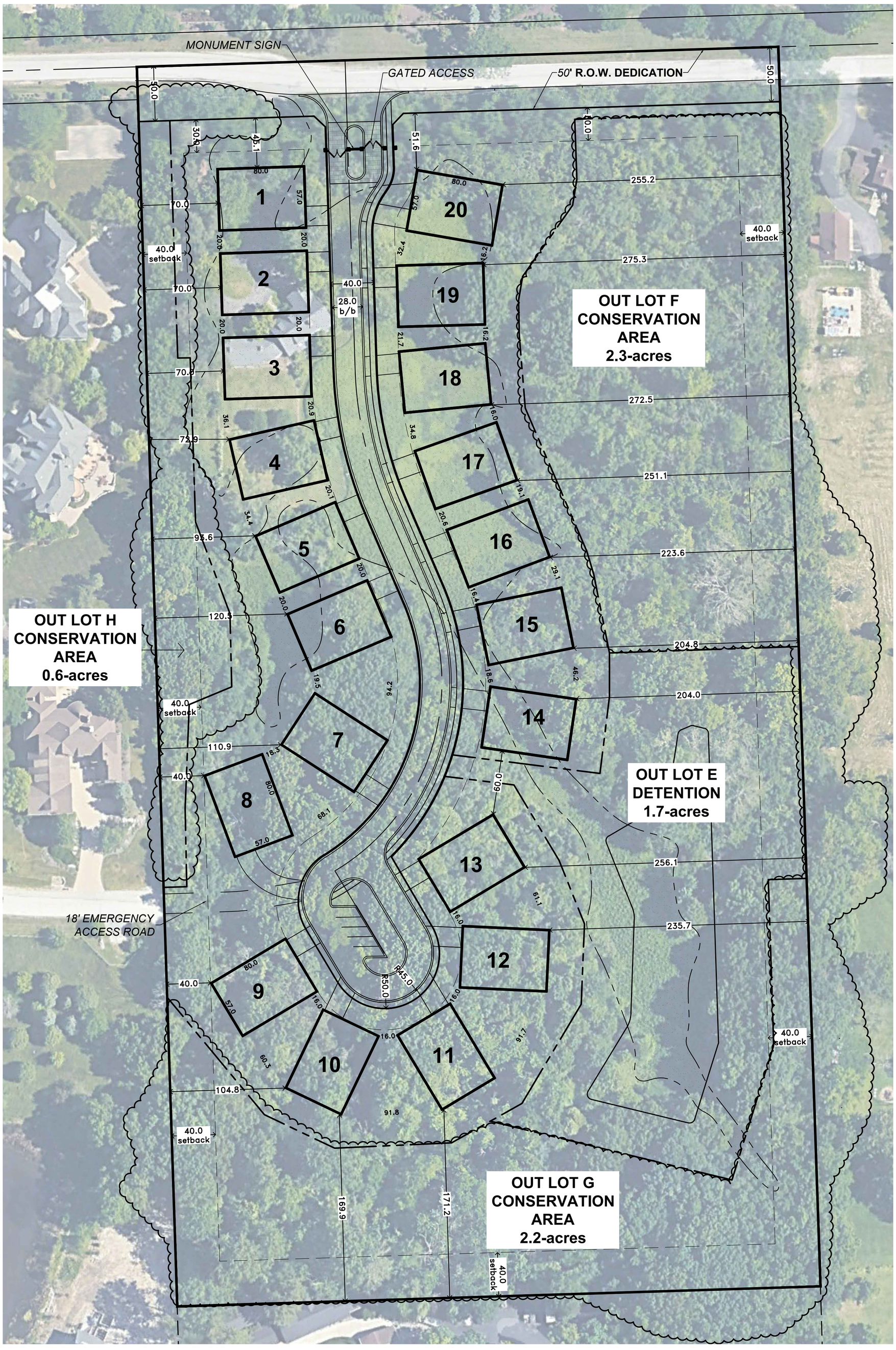

SITE PLAN DATA

TOTAL AREA	15.2 Acres (+/-)
PROPOSED ZONING	R-2B P.U.D.
ROADWAY DEDICATION (87th St.)	0.7 Acres
TOTAL OPEN SPACE	6.8 Acres (45%)
DETENTION AREA	1.7 Acres (11%)
CONSERVATION AREA	5.1 Acres (34%)
TOTAL HOMES:	20
BUILDING SETBACK	
Property Line	40' min.
Front Yard	20' min.
Side to Side	16' min.
Rear to Side	60' min.
Average Side to Side @ Mid-point	32.6'

LEGEND

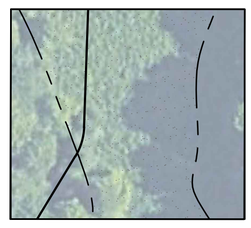

Existing site area not covered by trees - +/- 2.7-acres



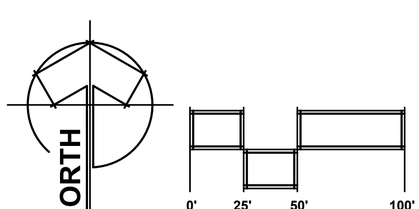

This plan was prepared to illustrate the development potential for the site. As a Site Plan, it is conceptual in nature. Therefore, all dimensions are subject to verification and the Site Plan is subject to modification pending final planning, engineering, architecture and municipal approval.

McNaughton DEVELOPMENT, LLC
YOUR LUXURY HOME BUILDER

© Copyright 2020 all rights reserved. The design and any and all ideas contained herein are the sole property of Metz & Company. Any reproduction of the design or the concept embodied herein in any form, in whole or in part, without consent from Metz & Company is prohibited.

If this plan is not 24" x 36" in size, then it is a reproduction that may not be to scale

REVISIONS
1 Client Review Comments 08-08-22
2 Client Review Comments 08-11-22
3 Client Review Comments 08-15-22
4 Client Review Comments 08-22-22
5 Client Review Comments 08-25-22
6 Final Engineering Design 10-10-22
7 Village Review Comments 11-16-22

ENCLAVE OF HIGHLAND FIELDS

11731 W. 87th STREET
BURR RIDGE, ILLINOIS

SEAL:

METZ & COMPANY
LANDSCAPE ARCHITECTURE SITE PLANNING
826 East Maple Street
Lombard, Illinois 60148
PH: 630.561.3903
www.metz-company.com

TITLE
CONCEPTUAL
SITE PLAN

PROJECT NO.:
21-171
DATE: 10-20-2022
SCALE: 1"=50'

SHEET
SP-1

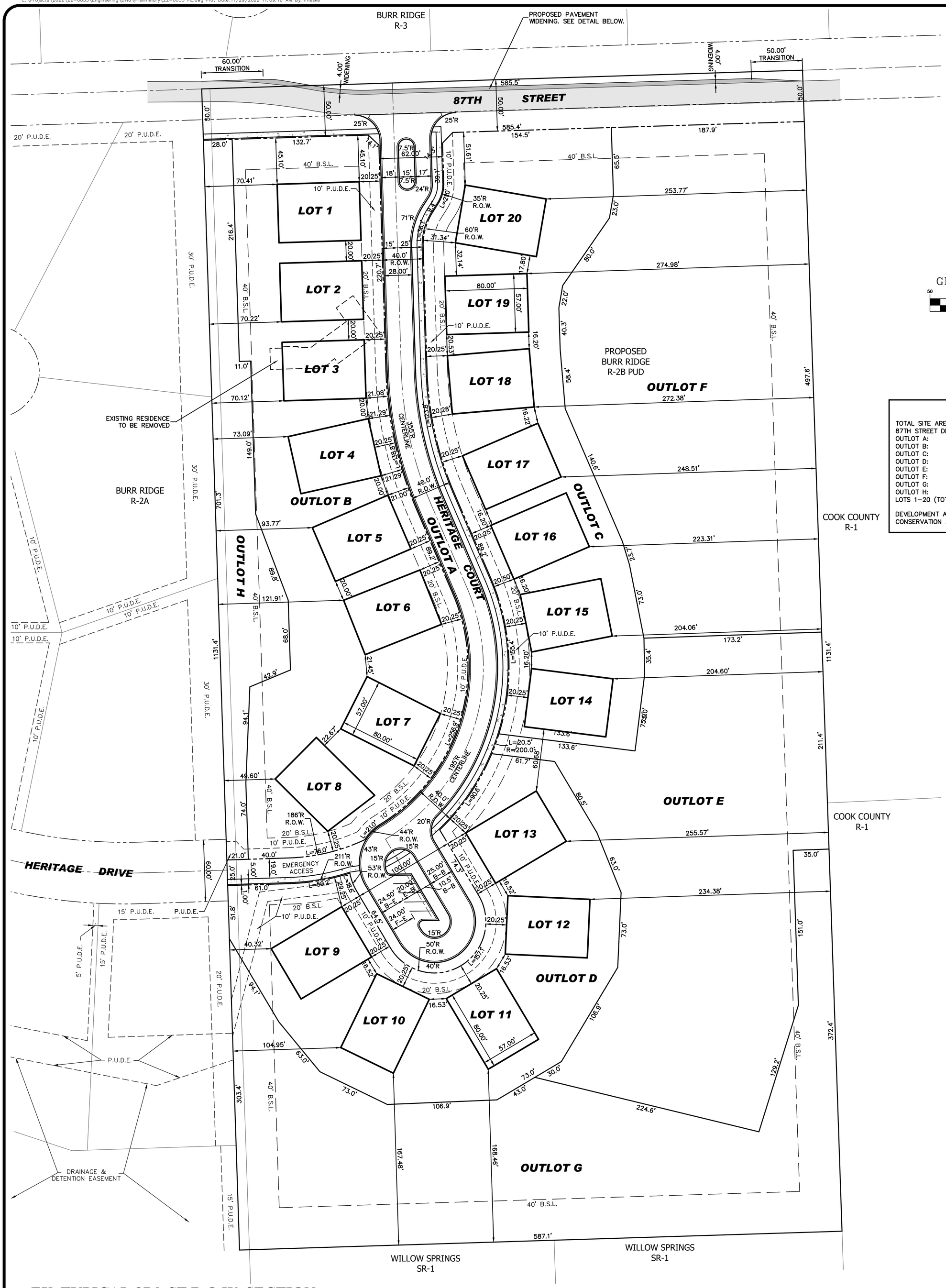

SITE DATA TABLE

TOTAL SITE AREA:	663,360 S.F./15.23 ACRES
87TH STREET DEDICATION:	29,273 S.F./0.67 ACRES
OUTLOT A:	46,860 S.F./1.08 ACRES
OUTLOT B:	71,943 S.F./1.64 ACRES
OUTLOT C:	52,894 S.F./1.16 ACRES
OUTLOT D:	49,983 S.F./1.15 ACRES
OUTLOT E:	92,699 S.F./2.13 ACRES
OUTLOT F:	105,330 S.F./2.42 ACRES
OUTLOT G:	97,568 S.F./2.24 ACRES
OUTLOT H:	25,610 S.F./0.59 ACRES
LOTS 1–20 (TOTAL):	91,200 S.F./2.09 ACRES
DEVELOPMENT AREAS (OUTLOTS A+B+C+D+E):	7.21 ACRES
CONSERVATION AREAS (OUTLOTS F+G+H):	5.25 ACRES

EX. TYPICAL 87th ST R.O.W. SECTION

NOT TO SCALE

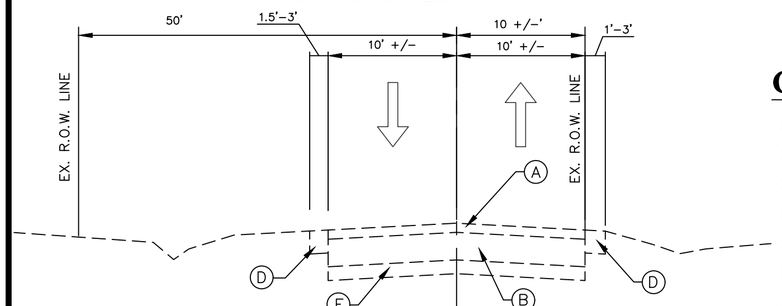

PROP. TYPICAL 87th ST R.O.W. SECTION

NOT TO SCALE

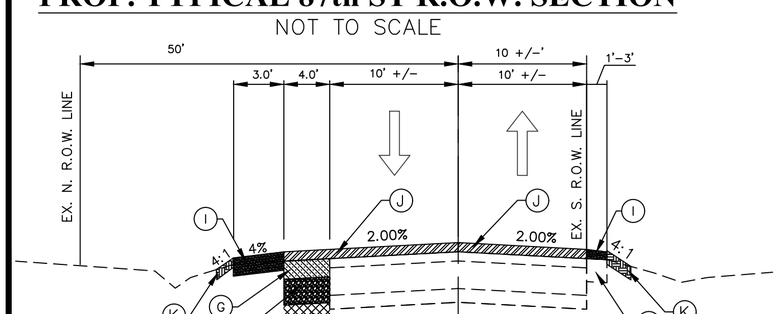

CROSS-SECTION LEGEND

- (A) EXISTING HMA SURFACE LAYER
- (B) EXISTING HMA BINDER AND/OR BAM LAYER
- (C) NOT USED
- (D) EXISTING GRAVEL SHOULDER
- (E) NOT USED
- (F) EXISTING AGGREGATE BASE LAYER
- (G) PROPOSED 3.5" HMA BINDER COURSE
- (H) PROPOSED 8" AGGREGATE BASE COURSE
- (I) PROPOSED 6" (1.5" ON S EDGE) CA-6 AGGREGATE SHOULDER
- (J) PROPOSED 1.5" HMA SURFACE COURSE (OVERLAY – NO MILL)
- (K) OFF ROAD RESTORATION – 4" TOPSOIL & SEED
- (L) COMPACTED CLAY SUB-GRADE

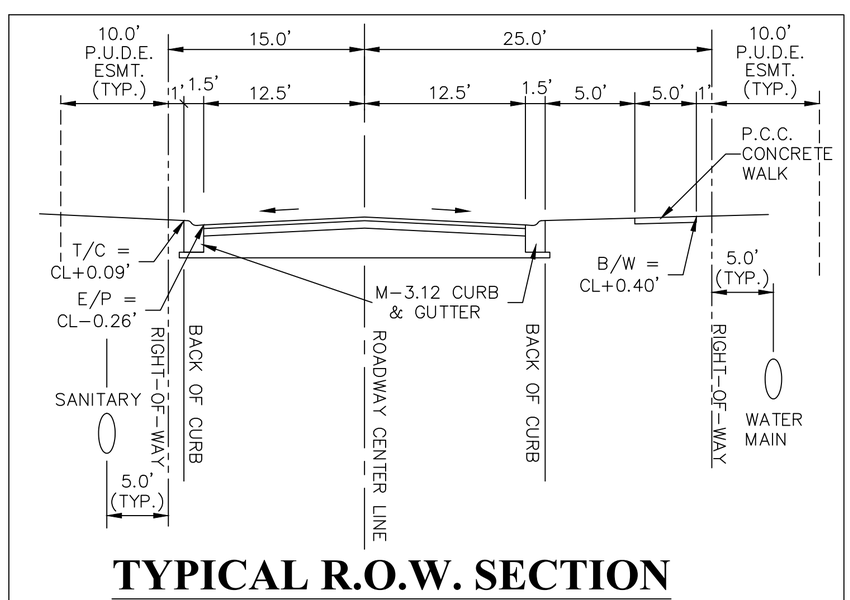

TYPICAL R.O.W. SECTION

NOT TO SCALE

1 OF 1	
PROJECT INFORMATION	
Project No.: 22-0035	
Scale: 1" = 50'	
Date: 09-23-2022	
Design By: SDS	
Drawn By: NSM	
Checked By: SDS	

DESIGNTEK ENGINEERING, INC.
CONSULTING, CIVIL ENGINEERING & LAND SURVEYING
9930 W. 190TH STREET, SUITE L
MOKENA, ILLINOIS 60448
(708) 326 - 4961
FAX: (708) 326 - 4962
DEI
IL PROF. LIC. NO.: 184 - 003740

PRELIMINARY SITE PLAN/PLAT
FOR
ENCLAVE OF BURR RIDGE
11737 87TH STREET
BURR RIDGE, ILLINOIS

McNAUGHTON DEVELOPMENT
11S220 JACKSON ST. Ste. 101
BURR RIDGE, ILLINOIS 60527
(630) 325-3400

REVISIONS

NO.	DATE	DESCRIPTION	BY
1	11-21-22	REV. PER VILLAGE REVIEW	SDS
2	11-29-22	REV. PER OFFICE REVIEW	SDS

PRELIMINARY SITE PLAN/PLAT

L:\Projects\2022\22-0035\Engineering\DWG\Preliminary\22-0035 PE.dwg Plot Date: 11/29/2022 11:10:41 AM By: nmeske

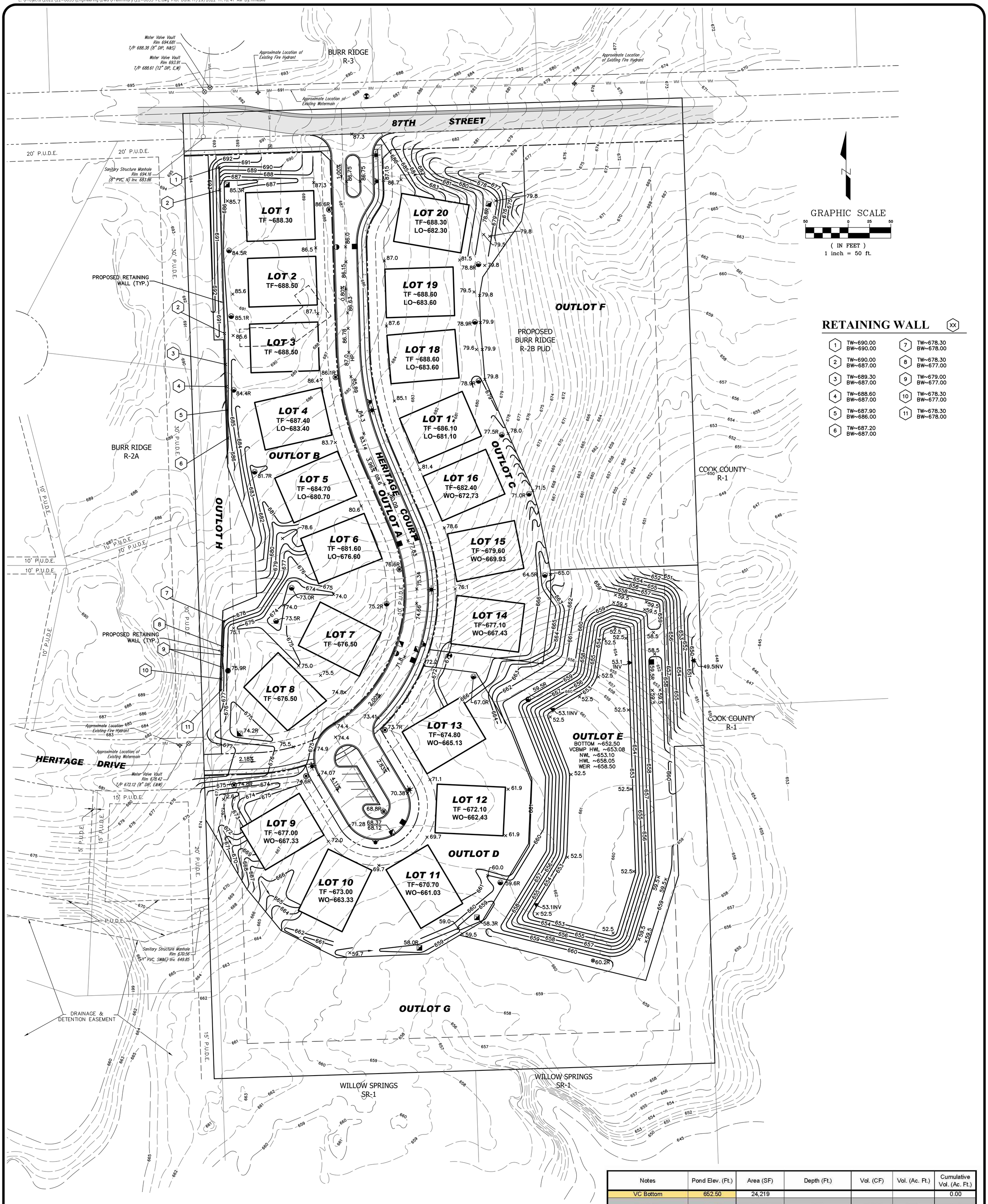

RETAINING WALL (XX)

1	TW~690.00 BW~690.00	7	TW~678.30 BW~678.00
2	TW~690.00 BW~687.00	8	TW~678.30 BW~677.00
3	TW~689.30 BW~687.00	9	TW~679.00 BW~677.00
4	TW~688.60 BW~687.00	10	TW~678.30 BW~677.00
5	TW~687.90 BW~686.00	11	TW~678.30 BW~678.00
6	TW~687.20 BW~687.00		

Notes	Pond Elev. (Ft.)	Area (SF)	Depth (Ft.)	Vol. (CF)	Vol. (Ac. Ft.)	Cumulative Vol. (Ac. Ft.)
VC Bottom	652.50	24,219				0.00
VC HWL	653.08	26,202	0.6	14,618	0.34	0.34
	654.00	29,507				
NWL	653.08	26,202				0.00
	654.00	29,507	0.9	25,611	0.59	0.59
	655.00	33,198	1.0	31,334	0.72	1.31
	656.00	37,011	1.0	35,087	0.81	2.11
	657.00	40,947	1.0	38,962	0.89	3.01
	658.00	45,006	1.0	42,961	0.99	3.99
HWL	658.05	45,213	0.0	2,255	0.05	4.05
Weir	658.50	47,097	0.5	20,768	0.48	4.52
	659.00	49,187	0.5	24,069	0.55	5.07

1 OF 2

PROJECT INFORMATION
Project No.: 22-0035
Scale: 1" = 50'
Date: 09-23-2022
Design By: SDS
Drawn By: NSM
Checked By: SDS

DESIGNTEK ENGINEERING, INC.
CONSULTING, CIVIL ENGINEERING & LAND SURVEYING
9930 W. 190TH STREET, SUITE L
MOKENA, ILLINOIS 60448
(708) 326 - 4961
FAX: (708) 326 - 4962
IL PROF. LIC. NO.: 184 - 003740

PRELIMINARY ENGINEERING PLAN
FOR
ENCLAVE OF BURR RIDGE
11737 87TH STREET
BURR RIDGE, ILLINOIS

McNAUGHTON DEVELOPMENT
11S220 JACKSON ST. Ste. 101
BURR RIDGE, ILLINOIS 60527
(630) 325-3400

REVISIONS

NO.	DATE	DESCRIPTION	BY
1	11-21-22	REV. PER VILLAGE REVIEW	SDS
2	11-29-22	REV. PER OFFICE REVIEW	SDS

PRELIMINARY ENGINEERING: GRADING PLAN

Water Valve Vault
Rim 694.681
T/P 688.38 (8" DIP, N&S)

Water Valve Vault
Rim 693.91
T/P 688.61 (12" DIP, E,W)

Approximate Location of Existing Fire Hydrant

Approximate Location of Existing Watermain

BURR RIDGE
R-3

8" PRESSURE CONNECTION TO EXISTING 8" WATERMAIN IN 72" VAULT.

Approximate Location of Existing Fire Hydrant

87TH STREET

20' P.U.D.E.

20' P.U.D.E.

Sanitary Structure Manhole
Rim 694.16
(8" PVC, N) Inv. 683.86

LP#1

40' B.S.L.

10' P.U.D.E.

LOT 1

LOT 20

LOT 2

LOT 19

LOT 3

LOT 18

PROPOSED RETAINING WALL (TYP.)

30' P.U.D.E.

40' B.S.L.

20' B.S.L.

10' P.U.D.E.

PROPOSED BURR RIDGE R-2B PUD

OUTLOT F

197' ~8" PVC SDR-26 SANITARY SEWER @ 0.51%

EXISTING RESIDENCE TO BE REMOVED

LOT 4

LP#2

LOT 17

BURR RIDGE
R-2A

OUTLOT B

237' ~8" PVC SDR-26 SANITARY SEWER @ 3.80%

LOT 5

HERITAGE COURT

OUTLOT A

OUTLOT C

LOT 16

COOK COUNTY
R-1

OUTLOT H

LOT 6

LOT 15

LOT 14

LP#3

PROPOSED RETAINING WALL (TYP.)

LOT 7

PROPOSED RESTRICTOR MANHOLE TO BE CONSTRUCTED IN ACCORDANCE WITH VILLAGE STANDARDS

PROVIDE 8" VALVE IN 60" DIA. VAULT FOR FUTURE EXTENSION

189' ~8" PVC SDR-26 SANITARY SEWER @ 2.06%

LOT 8

85' ~8" PVC SDR-26 SANITARY SEWER @ 1.00%

CONNECT TO EXISTING 8" WATERMAIN STUB.

CONNECT POND UNDERDRAIN TO MANHOLE UPSTREAM OF PROPOSED RESTRICTOR

OUTLOT E

LOT 13

COOK COUNTY
R-1

Approximate Location of Existing Fire Hydrant

Approximate Location of Existing Watermain

HERITAGE DRIVE

EMERGENCY ACCESS

LP#5

107' ~8" PVC SDR-26 SANITARY SEWER @ 3.64%

Water Valve Vault
Rim 678.42
T/P 672.12 (8" DIP, E&W)

LP#4

LOT 12

LOT 9

OUTLOT D

148' ~8" PVC SDR-26 SANITARY SEWER @ 6.08%

CONNECT 8" PVC SDR-26 SANITARY SEWER TO EXISTING MANHOLE. CORE & BOOT CONNECTION IN ACCORDANCE WITH VILLAGE STANDARDS. REMOVE, PLUG & SEAL THE EXISTING EAST PIPE WHICH WILL NOT BE UTILIZED FOR PROPOSED DEVELOPMENT

100' ~8" PVC SDR-26 SANITARY SEWER @ 1.00%

LOT 10

LOT 11

295' ~4" PERFORATED PVC UNDERDRAIN @ 0.00% (INV ~650.50)

PROPOSED CLEANOUT
RIM ~760.20

Sanitary Structure Manhole
Rim 670.56
(8" PVC, SW&E) Inv. 649.85

DRAINAGE & DETENTION EASEMENT

OUTLOT G

WILLOW SPRINGS
SR-1

WILLOW SPRINGS
SR-1

GRAPHIC SCALE
50 0 25 50
(IN FEET)
1 inch = 50 ft.

SANITARY STRUCTURES (XX)

(EX1) EX. M.H.
RIM 670.56
EX. INV 649.85
PR INV 649.95(8" PVC)

(1) 48" M.H., C.L.
RIM 674.80
INV 658.95

(2) 48" M.H., C.L.
RIM 674.60
INV 659.80

(3) 48" M.H., C.L.
RIM 668.80
INV 660.80

(4) 48" M.H., C.L.
RIM 673.70
INV 663.70

(5) 48" M.H., C.L.
RIM 676.60
INV 667.60

(6) 48" M.H., C.L.
RIM 686.10
INV 676.60

(7) 48" M.H., C.L.
RIM 686.60
INV 677.60

NOTES:

1. ALL PROPOSED SANITARY SHALL BE 8" PVC SDR-26 UNLESS NOTED OTHERWISE.
2. ALL WATERMAIN SHALL BE 8" D.I.P. UNLESS NOTED OTHERWISE.
3. STORM SEWERS SHALL BE SIZED DURING FINAL ENGINEERING DESIGN.
4. ALL PROPOSED STORM SEWER THAT IS PROPOSED BETWEEN LOTS SHALL BE WATER MAIN QUALITY PIPE IN ACCORDANCE WITH VILLAGE STANDARDS.

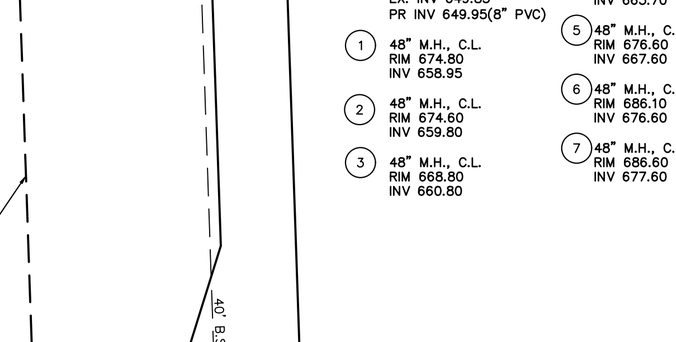

POND BOTTOM AGGREGATE TRENCH DETAIL

NOT TO SCALE

2 OF 2

PROJECT INFORMATION
Project No.: 22-0035
Scale: 1" = 50'
Date: 09-23-2022
Design By: SDS
Drawn By: NSM
Checked By: SDS

DESIGNTEK ENGINEERING, INC.
CONSULTING, CIVIL ENGINEERING & LAND SURVEYING
9930 W. 190TH STREET, SUITE L
MOKENA, ILLINOIS 60448
(708) 326 - 4961
FAX: (708) 326 - 4962
DEI
IL PROF. LIC. NO.: 184 - 003740

PRELIMINARY ENGINEERING PLAN
FOR
ENCLAVE OF BURR RIDGE
11737 87TH STREET
BURR RIDGE, ILLINOIS

McNAUGHTON DEVELOPMENT
11S220 JACKSON ST. Ste. 101
BURR RIDGE, ILLINOIS 60527
(630) 325-3400

REVISIONS

NO.	DATE	DESCRIPTION	BY
1	11-21-22	REV. PER VILLAGE REVIEW	SDS
2	11-29-22	REV. PER OFFICE REVIEW	SDS

PRELIMINARY ENGINEERING: UTILITY PLAN

L:\Projects\2022\22-0035\Survey\dwg\VOID\22-0035 Topo w prop lots.dwg Plot Date:11/25/2022 12:08:42 PM By:sschreiner

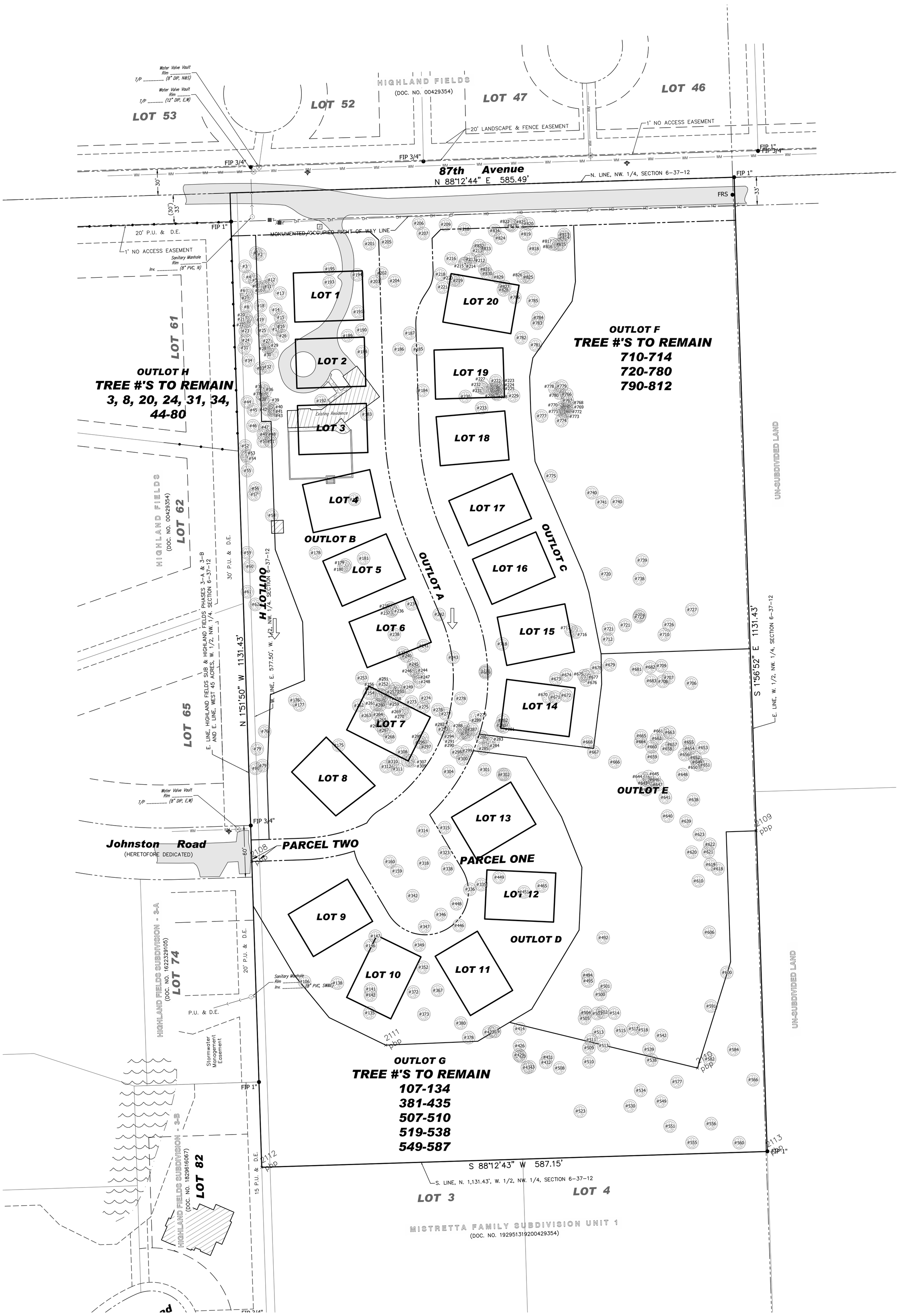

1 OF 4	PROJECT INFORMATION Project No.: 22-0035 Scale: 1" = 50' Date: 11-21-2022 Design By: SDS Drawn By: SDS Checked By: SDS	DESIGNTEK ENGINEERING, INC. CONSULTING, CIVIL ENGINEERING & LAND SURVEYING 9930 W. 190TH STREET, SUITE L MOKENA, ILLINOIS 60448 (708) 326 - 4961 FAX: (708) 326 - 4962 DEI IL PROF. LIC. NO.: 184 - 003740	TREE SURVEY FOR ENCLAVE OF BURR RIDGE 11737 87TH STREET BURR RIDGE, ILLINOIS	McNAUGHTON DEVELOPMENT 11S220 JACKSON ST. Ste. 101 BURR RIDGE, ILLINOIS 60527 (630) 325-3400	REVISIONS NO. DATE DESCRIPTION BY

TREE SURVEY

Tree Survey: Completed by Adam Keppel, Certified Arborist IL-5152A

Tree #	Species	DBH Size (In Inches)	Condition	Form	Comments
1	Austrian Pine	13"	5	5	Dead
2	Austrian Pine	18"	5	5	
3	Mulberry	13"	3	4	
4	Mulberry	10"	3	4	
5	Hemlock	7"	3	3	
6	Mulberry	14"	3	2	
7	Mulberry	13"	3	3	
8	Mulberry	12"	3	4	
9	Austrian Pine	22"	3	3	
10	Austrian Pine	11"	5	5	
11	Scotts Pine	18"	5	5	
12	Black Cherry	10"	3	4	Declining
13	Red Oak	23"	3	4	Hollow
14	Fir	10"	4	4	
15	Fir	9"	3	3	
16	Fir	10"	3	3	
17	Fir	9"	3	3	
18	Black Cherry	8"	3	3	
19	Austrian Pine	11"	4	4	Declining
20	Mulberry	11"	3	4	
21	Mulberry	11"	3	4	
22	Mulberry	12"	3	3	
23	Mulberry	13"	5	5	
24	Black Cherry	8"	4	4	
25	Austrian Pine	22"	4	4	
26	Black Cherry	13"	4	3	
27	Black Cherry	11"	3	3	
28	Austrian Pine	13"	4	3	
29	Black Cherry	9"	3	4	
30	Red Oak	26"	3	3	Lean
31	Red Oak	32"	2	2	
32	Black Cherry	13"	5	5	Lean
33	Scotts Pine	9"	3	3	
34	Mulberry	9"	3	4	Lean
35	Black Cherry	10"	3	3	
36	Austrian Pine	19"	4	3	
37	Austrian Pine	9"	4	4	
38	Austrian Pine	23"	3	3	
39	Austrian Pine	9"	5	5	
40	Austrian Pine	11"	4	5	
41	Black Cherry	9"	4	3	
42	Austrian Pine	11"	3	3	
43	American Elm	21"	2	2	
44	Mulberry	18"	3	4	Lean
45	Mulberry	10"	3	3	
46	Mulberry	18"	3	4	Lean, decay
47	Austrian Pine	13"	3	3	
48	Austrian Pine	19"	3	4	Lean
49	Austrian Pine	10"	5	5	
50	Austrian Pine	10"	5	5	
51	Austrian Pine	19"	3	3	
52	American Elm	30"	2	2	
53	Red Oak	28"	3	4	
54	Red Oak	20"	3	4	
55	Black Cherry	10"	3	4	
56	Fir	9"	4	4	
57	Ash	10"	5	5	
58	Poplar	13"	4	3	
59	Shagbark Hickory	23"	2	2	
60	White Oak	30"	3	3	
61	Black Cherry	10"	4	4	Lean
62	White Oak	27"	2	2	
63	Mulberry	20"	3	4	Lean
64	Bur Oak	16"	2	2	
65	Mulberry	9"	4	4	
66	White Oak	21"	2	3	Lean
67	White Oak	37"	2	3	One sided
68	American Elm	11"	2	2	
69	American Elm	10"	3	2	
70	American Elm	8"	3	3	
71	Red Oak	37"	2	3	
72	Black Cherry	9"	3	4	
73	Black Cherry	22"	5	5	
74	Black Cherry	14"	5	5	
75	Black Cherry	15"	5	5	
76	Black Cherry	9"	4	4	
77	Black Cherry	13"	5	5	
78	Ash	12"	5	5	
79	Black Cherry	9"	5	5	
80	Red Oak	12"	3	4	
81	Ash	10"	5	5	
82	American Elm	12"	2	2	
83	Ash	14",13"	5	5	
84	Red Oak	20"	2	2	
85	Red Oak	14"	2	2	
86	Red Oak	10"	2	3	
87	Red Oak	11"	2	2	
88	Red Oak	11"	2	3	
89	Red Oak	14"	2	3	
90	Ash	17"	5	5	
91	Ash	9"	5	5	
92	Red Oak	20"	3	4	Lean
93	Red Oak	36"	2	2	
94	Red Oak	17"	2	3	
95	Red Oak	14"	2	3	
96	American Elm	16"	5	5	
97	Black Cherry	9"	4	4	
98	Red Oak	14"	3	4	Lean
99	Red Oak	16"	2	2	
100	Red Oak	15"	3	3	Lean
101	Red Oak	15"	2	3	
102	Red Oak	14"	3	3	
103	Ash	10"	5	5	
104	Red Oak	11"	1	1	
105	Red Oak	9"	2	1	
106	Red Oak	9"	1	1	
107	Red Oak	9"	2	2	
108	Red Oak	8"	2	3	
109	Red Oak	23", 10"	2	2	
110	White Oak	31"	2	2	
111	White Oak	25"	4	3	
112	White Oak	27"	3	3	
113	Shagbark Hickory	10"	2	3	Lean
114	Red Oak	18"	3	4	Decay
115	Red Oak	19"	2	3	
116	Red Oak	14"	3	3	
117	Red Oak	20"	2	2	
118	Red Oak	21"	3	2	
119	Box Elder	10"	5	5	
120	American Elm	9"	3	3	
121	Tulip Poplar	10"	2	2	
122	Tulip Poplar	22"	2	3	Lean
123	Red Oak	13"	3	3	
124	Tulip Poplar	12"	2	3	Lean
125	American Elm	13"	2	2	
126	Cottonwood	34"	2	2	
127	Red Maple	9"	1	2	
128	Ash	9"	5	5	
129	Box Elder	11"	4	4	
130	Red Maple	9"	2	2	
131	Red Maple	8"	2	2	
132	Ash	11"	5	5	
133	Ash	10"	5	5	
134	Red Maple	10"	2	2	
135	American Elm	10"	2	3	
136	Ash	11"	5	5	
137	Walnut	13"	4	4	Decay
138	Tulip Poplar	21"	1	1	
139	Red Cedar	11"	3	2	
140	Red Oak	10"	3	3	
141	Red Cedar	10"	3	3	
142	Red Oak	14"	3	3	
143	Ash	12"	5	5	
144	Red Cedar	12"	4	3	
145	Red Cedar	8", 8"	4	5	
146	Red Cedar	14"	3	3	
147	Red Cedar	13"	2	3	
148	American Elm	15"	5	5	
149	Tulip Poplar	9"	2	3	
150	Red Oak	17"	2	2	
151	Red Oak	19"	2	3	Lean
152	Red Oak	17"	2	2	
153	Red Oak	8"	2	2	
154	Red Oak	9"	2	3	
155	Tulip Poplar	19"	2	2	
156	Red Oak	10"	2	3	Lean
157	Red Oak	8"	2	2	
158	Red Oak	9"	3	3	
159	Honey Locust	18"	4	3	
160	Honey Locust	20"	3	3	
161	Swamp White Oak	14"	2	2	
162	Red Oak	23"	2	1	
163	Swamp White Oak	19"	1	2	
164	Honey Locust	13"	4	4	
165	Red Oak	22"	1	1	
166	Swamp White Oak	20"	1	2	
167	Bur Oak	18"	1	1	
168	Red Oak	10"	2	2	
169	Red Oak	9"	3	4	Lean
170	Red Oak	15"	2	3	
171	Red Oak	14"	2	2	
172	Red Oak	15"	2	3	
173	Red Oak	9"	2	3	
174	Red Oak	17"	2	3	Lean
175	Red Oak	20"	2	2	
176	Black Cherry	11"	5	5	
177	Black Cherry	10"	5	5	
178	Cottonwood	38"	2	2	
179	American Elm	14"	2	2	
180	Ash	13"	5	5	
181	Ash	13"	5	5	
182	Mulberry	39"	3	3	Decay
183	Magnolia	11"	3	4	
184	Siberian Elm	13"	3	3	
185	Sugar Maple	20"	3	2	
186	Hackberry	15"	2	4	
187	Sugar Maple	18"	3	4	Split Trunk
188	Hackberry	21"	2	3	
189	Sugar Maple	20"	1	1	
190	Cottonwood	40"	4	4	Decay
191	Red Oak	18"	1	1	
192	Magnolia	14", 14", 14"	3	3	Decay
193	Silver Poplar	14"	3	4	Lean
194	American Elm	13"	2	3	
195	American Elm	15"	3	3	
196	Osage Orange	15", 15"	2	3	
197	Mulberry	12"	3	4	
198	Black Cherry	13"	3	3	
199	American Elm	13"	3	3	
200	Mulberry	10"	5	5	
201	Red Oak	11"	2	2	
202	Silver Poplar	11"	3	3	
203	Ash	9"	5	5	
204	Ash	13"	5	5	
205	American Elm	8"	2	3	
206	American Elm	9"	4	4	Topped
207	Swamp White Oak	9"	2	2	
208	American Elm	8"	2	3	
209	American Elm	9"	4	4	Topped
210	Red Oak	9"	4	4	By power pole
211	American Elm	8"	4	4	
212	American Elm	12"	2	3	
213	American Elm	9"	3	4	Lean
214	Red Oak	12"	3	3	
215	Red Oak	10"	3	4	
216	American Elm	12"	2	3	
217	American Elm	10"	3	2	
218	Ash	11"	5	5	
219	Red Oak	8"	3	4	
220	Red Oak	20"	2	3	
221	Red Oak	9"	2	2	
222	Red Oak	21"	1	1	
223	Red Oak	15"	1	2	
224	Red Oak	15"	2	2	
225	Red Oak	15"	2	2	
226	Red Oak	15"	2	2	
227	Red Oak	20"	2	2	
228	American Linden	15"	3	3	
229	Ginkgo	10"	3	4	
230	Red Oak	8"	3	4	Lean
231	American Linden	11"	2	3	
232	American Linden	12"	2	3	
233	Red Oak	11"	2	3	
234	Ash	13"	5	5	
235	Ash	12"	5	5	
236	Ash	9"	5	5	
237	Ash	8"	5	5	
238	Silver Maple	36"	2	3	Included Bark
239	Red Oak	21"	2	3	Lean
240	Red Oak	20"	2	3	Lean
241	Red Oak	28"	2	3	
242	Silver Maple	10"	3	4	
243	American Elm	9"	3	3	
244	American Linden	10"	3	4	
245	Red Oak	8"	5	5	Oak Wilt
246	Red Oak	13"	3	2	
247	Red Oak	9"	3	3	
248	Red Oak	18"	3	3	
249	Red Oak	18"	2	2	
250	American Linden	9"	3	4	
251	Red Oak	8"	3	3	
252	Red Oak	8"	3	3	
253	Ash	8"	5	5	
254	Red Oak	21"	3	4	Lean
255	American Linden	9"	3	4	
256	Red Oak	12"	2	3	
257	Red Oak	11"	2	2	
258	Red Oak	13"	2	2	
259	Red Oak	8"	3	4	
260	Red Oak	8"	2	3	
261	Red Oak	13"	2	3	
262	Black Cherry	13"	4	4	Hollow
263	Red Oak	10"	3	3	
264	American Elm	15"	3	4	
265	Sassafras	8"	4	4	
266	Sassafras	10"	4	4	
267	Red Oak	11"	3	4	
268	Red Oak	17"	3	3	
269	Red Oak	9"	3	3	
270	Red Oak	12"	2	2	
271	Red Oak	13"	2	2	
272	Red Oak	10"	3	3	
273	Red Oak	17"	2	2	
274	Red Oak	9"	2	3	
275	Red Oak	13"	2	3	
276	Red Oak	13"	2	3	
277	Red Oak	12"	2	2	
278	American Linden	12"	3	3	
279	Silver Maple	8"	3	3	
280	Ash	9"	5	5	
281	Red Oak	11"	2	3	
282	Red Oak	13"	3	3	
283	Red Oak	8"	3	3	
284	Red Oak	9"	3	3	
285	Red Oak	11"	3	3	
286	Red Oak	11"	3	3	
287	Red Oak	22"	2	2	
288	Red Oak	8"	3	3	
289	American Elm	9"	3	3	
290	American Elm	8"	3	3	
291	American Elm	10"	2	3	
292	American Elm	23"	2	3	Lean
293	Red Oak	11"	3	3	
294	Red Oak	20"	3	2	
295	Red Oak	18"	2	3	Lean
296	Red Oak	20"	1	1	
297	Red Oak	17"	2	2	
298	Bur Oak	13"	3	3	
299	Red Oak	10"	3	3	
300	Bur Oak	13"	3	2	
301	Tulip Poplar	19"	1	2	
302	American Elm	17"	1	2	
303	Black Walnut	9"	2	3	
304	Red Oak	11"	3	3	
305	Red Oak	10"	3	4	
306	Red Oak	9"	3	3	
307	Red Oak	10"	3	4	
308	Red Oak	15"	3	2	
309	Red Oak	8"	3	3	
310	Red Oak	9	3	3	
311	Red Oak	9"	3	3	
312	American Elm	10"	2	3	
313	American Elm	11"	3	3	
314	White Oak	30"	2	3	Stress crack
315	White Oak	30"	2	3	Stress crack
316	Red Oak	17"	2	2	
317	Red Oak	14"	2	3	
318	Red Oak	18"	3	3	
319	Red Oak	13"	3	3	
320	Red Oak	12"	3	3	
321	Red Oak	15"	2	3	
322	Silver Maple	10"	4	4	Declining
323	Silver Maple	15"	3	3	Stressed
324	Red Oak	8"	3	3	
325	Swamp White Oak	24"	1	2	
326	Red Maple	9"	2	2	
327	Black Cherry	10"	5	5	
328	Ash	9"	5	5	
329	American Elm	10"	3	3	
330	Ash	13"	5	5	
331	Red Oak	23"	1	1	
332	Red Oak	20"	1	1	
333	Ash	11"	5	5	
334	White Oak	9"	3	4	Lean
335	White Oak	18"	2	2	
336	Swamp White Oak	22"	2	3	
337	Black Cherry	11"	5	5	
338	Red Oak	16"	2	2	
339	American Linden	8"	3	4	
340	Red Oak	19"	2	2	
341	Red Maple	9"	3	4	
342	White Walnut	10"	3	3	
343	White Walnut	10"	3	4	Lean
344	Red Oak	18"	2	2	
345	Red Oak	17"	2	3	
346	Red Oak	20"	2	3	
347	Ash	10", 7"	5	5	
348	Red Maple	8"	3	4	
349	Red Maple	11"	2	2	
350	American Elm	11"	3	3	
351	Ash	11"	5	5	
352	Red Maple	19"	3	4	Decay
353	Red Maple	9"	3	4	
354	Swamp White Oak	18"	2	3	
355	Swamp White Oak	11"	2	2	
356	Swamp White Oak	14"	2	1	
357	Swamp White Oak	10"	2	3	
358	Red Maple	12"	2	2	
359	Swamp White Oak	11"	2	3	
360	Swamp White Oak	15"	2	3	
361	Swamp White Oak	16"	2	2	
362	Ash	12"	5	5	
363	Red Maple	9"	2	3	
364	Red Maple	8"	2	3	
365	Red Maple	12"	3	3	
366	Red Maple	8"	3	3	
367	Red Maple	14", 9"	3	3	
368	Red Maple	15"	4	4	Decay
369	Red Maple	20"	2	3	
370	Red Maple	8"	3	3	
371	Red Maple	10"	3	3	
372	Red Maple	9"	2	3	
373	Red Maple	13"	3	3	
374	Red Maple	14"	2	2	
375	Red Maple	15"	3	2	
376	Red Maple	14"	2	2	
377	American Elm	9"	5	5	
378	Red Maple	10"	3	3	
379	Red Maple	13"	2	3	
380	Red Maple	15", 10"	3	3	
381	Ash	11"	5	5	
382	Red Maple	10"	3	4	
383	Red Maple	9"	3	3	
384	Swamp White Oak	10"	3	4	
385	Ash	9"	5	5	
386	Red Maple	17"	3	3	
387	Swamp White Oak	12"	3	3	
388	Red Maple	12"	2	3	
389	Swamp White Oak	12"	2	2	
390	Swamp White Oak	13"	2	3	
391	Swamp White Oak	9"	3	3	
392	Red Maple	13"	2	3	
393	Swamp White Oak	12"	3	3	
394	Red Oak	20"	2	3	
395	Red Maple	9"	3	3	
396	Ash	12"	5	5	
397	Swamp White Oak	10"	2	3	
398	Red Oak	19"	2	2	
399	Red Oak	12"	2	3	Lean
400	Red Oak	13"	3	3	
401	Red Maple	15"	3	3	
402	Red Maple	15"	2	3	
403	Red Maple	13"	2	2	
404	Red Maple	9"	3	3	
405	Red Maple	9"	3	3	
406	Red Maple	9"	3	3	
407	American Elm	13"	5	5	
408	Red Maple	12"	2	3	
409	Red Maple	6", 6"	3	3	
410	Red Oak	8"	3	4	
411	Red Oak	12"	2	2	
412	American Elm	12"	3	4	
413	American Elm	9"	4	4	
414	American Elm	9"	4	4	
415	Ash	8"	5	5	
416	Red Maple	10"	2	3	
417	Ash	10"	5	5	
418	Ash	9"	5	5	
419	Red Maple	11"	3	3	
420	Ash	8"	5	5	
421	Red Maple	8"	3	2	
422	Red Maple	10"	3	3	
423	American Elm	12"	2	3	
424	Red Maple	12"	2	2	
425	Ash	18"	5	5	
426	Red Oak	10"	2	3	
427	Red Oak	8"	3	3	
428	Red Oak	9"	3	3	
429	Red Oak	9"	2	2	
430	American Elm	10"	3	4	
431	Silver Poplar	17"	3	4	Lean
432	Silver Poplar	15"	4	4	
433	American Elm	10"	5	5	
434	Red Oak	8"	2	2	
435	Sassafras	8"	3	3	
436	American Elm	12"	4	4	
437	American Elm	21"	2	2	
438	American Elm	10"	5	5	
439	Silver Poplar	18"	4	4	
440	American Elm	12"	3	3	
441	Red Maple	11"	2	3	
442	Ash	9"	5	5	
443	Ash	17"	5	5	
444	Ash	19"	5	5	
445	American Elm	12"	2	3	
446	Red Oak	14"	2	3	
447	American Elm	8"	5	5	
448	Swamp White Oak	13"	2	3	
449	Red Maple	22"	3	3	

PROJECT INFORMATION

Project No.: 22-0035
Scale: NO SCALE
Date: 11-21-2022
Design By: SDS
Drawn By: NSM
Checked By: SDS

DESIGNTEK ENGINEERING, INC.
CONSULTING, CIVIL ENGINEERING & LAND SURVEYING
9930 W. 190TH STREET, SUITE L
MOKENA, ILLINOIS 60448
(708) 326 - 4961
FAX: (708) 326 - 4962
IL PROF. LIC. NO.: 184 - 003740

TREE SURVEY
FOR
ENCLAVE OF BURR RIDGE
11737 87TH STREET
BURR RIDGE, ILLINOIS

McNAUGHTON DEVELOPMENT
11S220 JACKSON ST. Ste. 101
BURR RIDGE, ILLINOIS 60527
(630) 325-3400

REVISIONS

NO.	DATE	DESCRIPTION	BY

TREE SURVEY

299	Red Oak	10"	3	3	
300	Bur Oak	13"	3	2	
301	Tulip Poplar	19"	1	2	
302	American Elm	17"	1	2	
303	Black Walnut	9"	2	3	
304	Red Oak	11"	3	3	
305	Red Oak	10"	3	4	
306	Red Oak	9"	3	3	
307	Red Oak	10"	3	4	
308	Red Oak	15"	3	2	
309	Red Oak	8"	3	3	
310	Red Oak	9	3	3	
311	Red Oak	9"	3	3	
312	American Elm	10"	2	3	
313	American Elm	11"	3	3	
314	White Oak	30"	2	3	Stress crack
315	White Oak	30"	2	3	Stress crack
316	Red Oak	17"	2	2	
317	Red Oak	14"	2	3	
318	Red Oak	18"	3	3	
319	Red Oak	13"	3	3	
320	Red Oak	12"	3	3	
321	Red Oak	15"	2	3	
322	Silver Maple	10"	4	4	Declining
323	Silver Maple	15"	3	3	Stressed
324	Red Oak	8"	3	3	
325	Swamp White Oak	24"	1	2	
326	Red Maple	9"	2	2	
327	Black Cherry	10"	5	5	
328	Ash	9"	5	5	
329	American Elm	10"	3	3	
330	Ash	13"	5	5	
331	Red Oak	23"	1	1	
332	Red Oak	20"	1	1	
333	Ash	11"	5	5	
334	White Oak	9"	3	4	Lean
335	White Oak	18"	2	2	
336	Swamp White Oak	22"	2	3	
337	Black Cherry	11"	5	5	
338	Red Oak	16"	2	2	
339	American Linden	8"	3	4	
340	Red Oak	19"	2	2	
341	Red Maple	9"	3	4	
342	White Walnut	10"	3	3	
343	White Walnut	10"	3	4	Lean
344	Red Oak	18"	2	2	
345	Red Oak	17"	2	3	
346	Red Oak	20"	2	3	
347	Ash	10", 7"	5	5	
348	Red Maple	8"	3	4	
349	Red Maple	11"	2	2	
350	American Elm	11"	3	3	
351	Ash	11"	5	5	
352	Red Maple	19"	3	4	Decay
353	Red Maple	9"	3	4	
354	Swamp White Oak	18"	2	3	
355	Swamp White Oak	11"	2	2	
356	Swamp White Oak	14"	2	1	
357	Swamp White Oak	10"	2	3	
358	Red Maple	12"	2	2	
359	Swamp White Oak	11"	2	3	
360	Swamp White Oak	15"	2	3	
361	Swamp White Oak	16"	2	2	
362	Ash	12"	5	5	
363	Red Maple	9"	2	3	
364	Red Maple	8"	2	3	
365	Red Maple	12"	3	3	
366	Red Maple	8"	3	3	
367	Red Maple	14", 9"	3	3	
368	Red Maple	15"	4	4	Decay
369	Red Maple	20"	2	3	
370	Red Maple	8"	3	3	
371	Red Maple	10"	3	3	
372	Red Maple	9"	2	3	
373	Red Maple	13"	3	3	
374	Red Maple	14"	2	2	
375	Red Maple	15"	3	2	
376	Red Maple	14"	2	2	
377	American Elm	9"	5	5	
378	Red Maple	10"	3	3	
379	Red Maple	13"	2	3	
380	Red Maple	15", 10"	3	3	
381	Ash	11"	5	5	
382	Red Maple	10"	3	4	
383	Red Maple	9"	3	3	
384	Swamp White Oak	10"	3	4	
385	Ash	9"	5	5	
386	Red Maple	17"	3	3	
387	Swamp White Oak	12"	3	3	
388	Red Maple	12"	2	3	
389	Swamp White Oak	12"	2	2	
390	Swamp White Oak	13"	2	3	
391	Swamp White Oak	9"	3	3	
392	Red Maple	13"	2	3	
393	Swamp White Oak	12"	3	3	
394	Red Oak	20"	2	3	
395	Red Maple	9"	3	3	
396	Ash	12"	5	5	
397	Swamp White Oak	10"	2	3	
398	Red Oak	19"	2	2	
399	Red Oak	12"	2	3	Lean
400	Red Oak	13"	3	3	
401	Red Maple	15"	3	3	
402	Red Maple	15"	2	3	
403	Red Maple	13"	2	2	
404	Red Maple	9"	3	3	
405	Red Maple	9"	3	3	
406	Red Maple	9"	3	3	
407	American Elm	13"	5	5	
408	Red Maple	12"	2	3	
409	Red Maple	6", 6"	3	3	
410	Red Oak	8"	3	4	
411	Red Oak	12"	2	2	
412	American Elm	12"	3	4	
413	American Elm	9"	4	4	
414	American Elm	9"	4	4	
415	Ash	8"	5	5	
416	Red Maple	10"	2	3	
417	Ash	10"	5	5	
418	Ash	9"	5	5	
419	Red Maple	11"	3	3	
420	Ash	8"	5	5	
421	Red Maple	8"	3	2	
422	Red Maple	10"	3	3	
423	American Elm	12"	2	3	
424	Red Maple	12"	2	2	
425	Ash	18"	5	5	
426	Red Oak	10"	2	3	
427	Red Oak	8"	3	3	
428	Red Oak	9"	3	3	
429	Red Oak	9"	2	2	
430	American Elm	10"	3	4	
431	Silver Poplar	17"	3	4	Lean
432	Silver Poplar	15"	4	4	
433	American Elm	10"	5	5	
434	Red Oak	8"	2	2	
435	Sassafras	8"	3	3	
436	American Elm	12"	4	4	
437	American Elm	21"	2	2	
438	American Elm	10"	5	5	
439	Silver Poplar	18"	4	4	
440	American Elm	12"	3	3	
441	Red Maple	11"	2	3	
442	Ash	9"	5	5	
443	Ash	17"	5	5	
444	Ash	19"	5	5	
445	American Elm	12"	2	3	
446	Red Oak	14"	2	3	
447	American Elm	8"	5	5	
448	Swamp White Oak	13"	2	3	
449	Red Maple	22"	3	3	
450	Red Maple	10"	2	2	
451	Red Maple	11"	2	3	
452	Red Maple	11"	2	2	
453	Red Maple	8"	2	2	
454	Ash	8"	5	5	
455	Red Maple	12"	2	2	
456	Red Maple	12"	2	3	
457	Red Maple	11"	2	2	
458	Red Maple	10"	2	2	
459	Black Cherry	10"	5	5	
460	Red Maple	12"	2	3	
461	Red Maple	17"	2	3	
462	Red Maple	11"	2	3	
463	Red Maple	8"	3	3	
464	Red Maple	8"	5	5	
465	Red Maple	8"	3	3	
466	Red Maple	9"	3	4	
467	Ash	12"	5	5	
468	Red Maple	10"	3	3	
469	Red Maple	8"	3	3	
470	Red Maple	9"	2	3	
471	Ash	9"	5	5	
472	Red Maple	9"	2	3	
473	Sassafras	10"	3	3	
474	Red Maple	9"	2	3	
475	Red Maple	9"	3	3	
476	Red Maple	10"	3	3	
477	Red Maple	9"	3	3	
478	Red Maple	8"	3	4	Decay
479	Red Maple	20"	2	3	
480	Sassafras	11"	3	3	
481	Ash	9"	5	5	
482	Red Maple	10"	3	3	
483	Red Maple	9"	3	3	
484	Red Maple	8"	3	3	
485	Red Maple	9"	3	3	
486	Red Maple	8"	3	2	
487	Red Maple	8"	2	3	
488	Red Maple	13"	2	2	
489	Red Oak	9"	3	3	
490	Red Maple	8"	3	3	
491	Red Maple	9"	3	3	
492	Tulip Poplar	8"	1	1	
493	Red Oak	8"	3	4	
494	Red Maple	13"	2	2	
495	Red Maple	13"	2	2	
496	Red Maple	8"	2	3	
497	Red Maple	9"	2	2	
498	Ash	12"	5	5	
499	Red Maple	9", 8", 6"	2	2	
500	Red Maple	18"	1	1	
501	Red Oak	9"	2	3	
502	Red Maple	9"	3	3	
503	Ash	14"	5	5	
504	Red Oak	9"	3	3	
505	Ash	10"	5	5	
506	Red Maple	12"	3	3	
507	Red Maple	10"	2	3	
508	Ash	10"	5	5	
509	Red Maple	12"	2	2	
510	Red Oak	21"	1	1	
511	Red Maple	9"	2	3	
512	Tulip Poplar	17"	2	2	
513	Red Oak	13"	2	2	
514	Sassafras	10"	3	3	
515	Red Oak	12"	2	3	
516	American Elm	8"	3	2	
517	Red Oak	11"	3	3	
518	Red Oak	9"	3	3	
519	Red Oak	10"	2	3	
520	Ash	13"	5	5	
521	American Elm	10"	2	3	
522	American Elm	10", 10"	3	4	
523	Red Oak	15"	3	3	
524	Black Cherry	10"	3	4	
525	Shagbark Hickory	16"	3	2	
526	Black Cherry	12", 10"	5	5	
527	Red Cedar	9"	3	4	
528	American Elm	17"	4	4	
529	Red Oak	15"	3	4	
530	White Oak	15"	1	1	
531	White Oak	14"	1	2	
532	White Oak	13"	2	3	
533	White Oak	9"	5	5	
534	White Oak	9"	1	1	
535	White Oak	24"	1	1	
536	White Oak	10"	2	2	
537	White Oak	12"	2	2	
538	White Oak	20"	2	2	
539	White Oak	14"	2	3	
540	White Oak	14"	3	3	
541	White Oak	11"	3	3	
542	Red Oak	22"	2	3	
543	Red Oak	12"	2	3	
544	Red Oak	10"	3	4	Lean
545	Red Oak	13"	3	3	Lean
546	White Oak	14"	1	2	
547	White Oak	14"	1	1	
548	White Oak	10"	2	2	
549	White Oak	10"	2	2	
550	Shagbark Hickory	12"	1	2	
551	Red Oak	16"	3	3	
552	Shagbark Hickory	15"	2	2	
553	Red Oak	13"	3	3	
554	Red Oak	14", 11"	3	2	
555	White Oak	36"	1	3	
556	White Oak	30"	2	2	
557	Shagbark Hickory	14"	1	2	
558	Black Cherry	14"	2	3	
559	Red Oak	14"	2	3	Lean
560	Red Oak	15"	3	3	
561	Shagbark Hickory	9"	2	2	
562	Shagbark Hickory	9"	2	3	
563	Shagbark Hickory	9"	2	3	
564	Shagbark Hickory	9"	2	3	
565	Red Oak	13"	2	3	Lean
566	American Elm	9"	3	3	
567	Shagbark Hickory	13"	3	2	
568	Black Cherry	10"	3	2	Hollow
569	Shagbark Hickory	14"	2	3	
570	White Oak	13", 13"	2	2	
571	Shagbark Hickory	11"	2	2	
572	Shagbark Hickory	14"	2	2	
573	Shagbark Hickory	12"	4	4	
574	Shagbark Hickory	10"	2	3	
575	Red Oak	20", 14"	3	3	
576	Shagbark Hickory	10"	2	2	
577	White Oak	16"	2	2	
578	White Oak	14"	2	3	
579	White Oak	13"	2	3	
580	White Oak	8"	3	3	
581	White Oak	14"	2	3	Lean
582	Red Oak	8"	3	3	
583	White Oak	8"	3	3	
584	Red Oak	14"	2	2	
585	Red Oak	12"	2	3	
586	Red Oak	11"	3	3	
587	Red Oak	9"	2	3	
588	Black Cherry	8"	5	5	
589	Black Cherry	13"	5	5	
590	Black Cherry	9"	5	5	
591	Red Oak	22"	2	3	Lean
592	Red Oak	19"	2	2	
593	Red Oak	19"	2	2	
594	Bur Oak	19"	2	2	
595	Red Oak	9"	3	3	
596	Red Oak	10"	3	3	
597	Red Oak	12"	3	3	
598	White Oak	12", 11"	2	2	
599	White Oak	20"	1	2	
600	White Oak	20"	1	2	
601	Red Oak	13"	3	4	Lean
602	White Oak	9"	2	2	
603	White Oak	20"	2	3	
604	Red Oak	13"	2	2	
605	Black Cherry	11"	3	4	
606	Red Oak	20"	2	2	
607	Red Oak	14"	3	3	
608	Red Oak	14"	2	3	
609	Red Oak	20"	2	2	
610	Black Cherry	12"	3	4	
611	Red Oak	13"	3	4	
612	Black Cherry	9"	5	5	
613	Red Oak	22"	3	2	
614	Red Oak	22"	3	2	
615	Red Oak	20"	2	3	
616	Red Oak	12"	2	4	
617	Red Oak	19"	3	2	
618	Black Cherry	12"	3	4	
619	Red Oak	13"	3	3	
620	Red Oak	14"	3	3	
621	Red Oak	20"	1	3	Included Bark
622	Red Oak	21"	1	3	
623	Black Cherry	18"	4	4	
624	Red Oak	12"	2	3	Lean
625	Red Oak	11"	2	3	Lean
626	Black Cherry	9"	5	5	
627	Red Oak	21"	3	3	Lean
628	White Oak	30"	4	4	lightning strike, decayed
629	White Oak	38"	2	2	
630	Red Oak	19"	2	2	
631	Black Cherry	12"	5	5	
632	Black Cherry	13"	5	5	
633	Black Cherry	13"	5	5	
634	Black Cherry	20"	5	5	
635	Black Cherry	12"	5	5	
636	Black Cherry	15"	5	5	
637	Ash	14"	5	5	
638	Ash	10"	5	5	
639	Ash	10"	5	5	
640	Red Oak	9"	2	2	
641	Black Cherry	15"	1	1	
642	Red Oak	12"	2	2	
643	Red Oak	11"	2	2	
644	Red Oak	14"	2	3	
645	American Elm	10"	3	3	Lean
646	American Elm	12"	3	4	Lean
647	Red Oak	16"	2	3	
648	Black Cherry	9"	5	5	
649	American Elm	10"	3	4	
650	Sycamore	20"	3	3	
651	Sycamore	18"	3	3	
652	Sycamore	22"	2	3	
653	American Elm	18"	5	5	
654	Sycamore	11"	5	5	
655	Sycamore	18"	3	3	
656	Sycamore	14"	3	4	Lean
657	Sycamore	10"	4	4	
658	Sycamore	19"	2	2	
659	Black Cherry	9"	5	5	
660	Sycamore	22"	1	2	
661	Sycamore	18"	3	3	
662	American Elm	12"	3	3	
663	Sycamore	9"	3	4	Lean
664	American Elm	17"	3	4	
665	Sycamore	18"	3	3	
666	Sassafras	10"	5	5	
667	Black Alder	10"	4	4	
668	Tulip Poplar	20"	1	2	
669	American Elm	12"	2	3	
670	Ash	9", 5"	5	5	
671	Red Oak	9"	3	3	
672	Red Oak	19"	1	1	
673	Red Maple	9"	2	2	
674	Black Alder	9"	2	2	
675	Red Maple	9", 7"	2	3	
676	Ash	9"	5	5	
677	Ash	8"	5	5	
678	Ash	9"	5	5	
679	Black Cherry	9"	5	5	
680	White Oak	14"	1	2	
681	Tulip Poplar	19"	1	1	
682	Tulip Poplar	19"	1	1	
683	Tulip Poplar	19"	1	2	
684	Black Cherry	12"	5	5	
685	Red Oak	16"	2	3	
686	Red Oak	12"	3	3	
687	Black Cherry	14"	5	5	
688	American Linden	18"	2	3	Lean
689	American Linden	17"	3	3	Lean
690	Black Cherry	15"	5	5	
691	Black Cherry	19"	5	5	
692	Black Cherry	13"	5	5	
693	Red Oak	26"	2	3	Lean
694	Black Cherry	13"	5	5	
695	Tulip Poplar	22"	4	4	Half split out
696	Black Cherry	9"	5	5	
697	Black Cherry	9"	5	5	
698	Black Cherry	10"	4	4	
699	Black Cherry	9"	5	5	
700	Sugar Maple	21"	2	2	
701	American Linden	15"	3	4	Lean
702	American Linden	14"	3	4	Lean
703	Black Cherry	10"	5	5	Lean
704	American Linden	12", 7"	3	3	
705	American Linden	13"	3	3	
706	Black Cherry	13"	5	5	
707	Black Cherry	12"	5	5	
708	Black Cherry	14", 10", 9"	3	4	
709	Black Alder	9"	2	2	
710	Ash	13"	5	5	
711	Black Alder	9"	2	2	
712	Red Oak	14"	2	3	Lean
713	Red Oak	14"	2	2	
714	Red Oak	17"	2	2	
715	Red Oak	9"	2	3	Lean
716	Ash	12"	5	5	
717	Red Oak	17"	2	3	
718	Red Oak	8"	2	2	
719	Ash	9"	5	5	
720	Ash	9"	5	5	
721	Red Maple	11"	3	3	
722	Ash	9"	5	5	
723	Sweet Gum	16"	2	2	
724	Sweet Gum	16"	2	2	
725	Black Alder	12"	2	3	Decay
726	Black Alder	9"	5	5	
727	Sycamore	26"	2	2	
728	Sycamore	20"	2	2	
729	Sycamore	19"	2	3	Lean
730	Sycamore	22"	2	2	
731	Sycamore	16"	3	4	Lean
732	Ash	17"	5	5	
733	Sweet Gum	17"	1	1	
734	Black Alder	9"	2	3	
735	Black Cherry	8"	3	4	Lean
736	Ash	9"	5	5	
737	Tulip Poplar	14"	2	3	
738	Ash	12"	5	5	
739	Ash	9"	5	5	
740	Red Oak	11"	2	2	
741	Red Oak	16"	3	3	
742	Red Oak	14"	1	2	
743	Ash	10"	5	5	
744	Ash	9"	5	5	
745	Red Oak	10", 9"	2	3	
746	Ash	9"	5	5	
747	Ash	9", 8"	5	5	
748	Ash	9"	5	5	
749	Ash	10"	5	5	
750	Red Oak	17"	2	2	
751	Red Oak	21"	2	2	
752	American Elm	13"	3	2	
753	Ash	11"	5	5	
754	Ash	11"	5	5	
755	Sweet Gum	20"	2	2	

PROJECT INFORMATION

Project No.: 22-0035
Scale: NO SCALE
Date: 11-21-2022
Design By: SDS
Drawn By: NSM
Checked By: SDS

DESIGNTEK ENGINEERING, INC.
CONSULTING, CIVIL ENGINEERING & LAND SURVEYING
9930 W. 190TH STREET, SUITE L
MOKENA, ILLINOIS 60448
(708) 326-4961
FAX: (708) 326-4962
DEI
IL PROF. LIC. NO.: 184-003740

TREE SURVEY
FOR
ENCLAVE OF BURR RIDGE
11737 87TH STREET
BURR RIDGE, ILLINOIS

McNAUGHTON DEVELOPMENT
11S220 JACKSON ST. Ste. 101
BURR RIDGE, ILLINOIS 60527
(630) 325-3400

REVISIONS

NO.	DATE	DESCRIPTION	BY

TREE SURVEY

756	American Elm	18"	3	4	Split
757	American Elm	10"	3	3	
758	American Elm	18"	5	5	
759	Ash	9"	5	5	
760	Ash	23"	5	5	
761	American Elm	23"	3	4	
762	Ash	9"	5	5	
763	Ash	9"	5	5	
764	Ash	10"	5	5	
765	Ash	9"	5	5	
766	Red Oak	26"	2	2	
767	Red Oak	17"	2	3	
768	Red Oak	21"	2	3	
769	Red Oak	20"	2	3	
770	Red Oak	18"	2	3	
771	Red Oak	25"	2	2	
772	Red Oak	18"	2	3	Lean
773	Red Oak	14"	2	3	Lean
774	Red Oak	9"	3	3	Lean
775	Red Oak	30"	1	2	
776	Sassafras	8"	3	3	
777	American Elm	25"	2	2	
778	Sugar Maple	13"	2	3	
779	American Linden	12"	2	3	
780	American Linden	10"	4	4	
781	Ash	10"	5	5	
782	Ash	10"	5	5	
783	Ash	12"	5	5	
784	American Elm	10"	3	4	Lean
785	American Elm	13"	3	3	
786	Mulberry	19"	3	3	Decay
787	Black Cherry	9"	5	5	
788	Ash	9"	5	5	
789	Ash	9"	5	5	
790	Ash	12"	5	5	
791	Ash	10"	5	5	
792	Ash	13"	5	5	
793	Black Cherry	13"	5	5	
794	Red Oak	14"	3	4	Lean
795	Red Oak	20"	3	3	
796	Red Oak	12"	5	5	
797	Red Oak	18"	3	3	
798	Red Oak	12"	4	4	Lean
799	Ash	20"	5	5	
800	Ash	15"	5	5	
801	American Elm	10"	2	3	
802	American Elm	10"	2	2	
803	American Elm	14"	3	3	
804	Red Oak	17"	2	2	
805	Red Oak	21"	2	4	Sided back wires
806	Sassafras	13"	3	3	
807	Sassafras	9"	3	3	
808	Sassafras	10"	3	3	
809	Sassafras	12"	3	3	
810	Sassafras	9"	3	3	
811	Red Oak	11"	3	3	
812	Ash	10"	5	5	
813	Red Oak	18"	3	3	
814	White Oak	11"	5	5	
815	White Oak	10"	5	5	
816	Red Oak	10"	3	3	
817	American Elm	10"	3	3	
818	Red Oak	18"	2	2	
819	Red Oak	18"	1	1	
820	Ash	9"	5	5	
821	Red Oak	9"	4	4	topped wires
822	White Oak	9"	3	4	Sided back wires
823	Red Oak	8	4	4	
824	White Oak	12"	2	3	
825	Ash	10"	5	5	
826	Ash	14"	5	5	
827	American Elm	13"	3	3	
828	American Elm	9"	3	4	
829	Ash	12"	5	5	
830	Red Oak	13"	2	2	
831	Red Oak	12"	2	3	
832	Red Oak	9"	3	3	
833	American Elm	9"	4	4	Lean
834	White Oak	12"	5	5	

4 OF 4

PROJECT INFORMATION
Project No.: 22-0035
Scale: NO SCALE
Date: 11-21-2022
Design By: SDS
Drawn By: NSM
Checked By: SDS

DESIGNTEK ENGINEERING, INC.
CONSULTING, CIVIL ENGINEERING & LAND SURVEYING
9930 W. 190TH STREET, SUITE L
MOKENA, ILLINOIS 60448
(708) 326-4961
FAX: (708) 326-4962
DEI
IL PROF. LIC. NO.: 184-003740

TREE SURVEY
FOR
ENCLAVE OF BURR RIDGE
11737 87TH STREET
BURR RIDGE, ILLINOIS

McNAUGHTON DEVELOPMENT
11S220 JACKSON ST. Ste. 101
BURR RIDGE, ILLINOIS 60527
(630) 325-3400

REVISIONS			
NO.	DATE	DESCRIPTION	BY

TREE SURVEY

Tree Survey: Completed by Adam Keppel, Certified Arborist IL-5152A

Tees to be Removed

Count	Tree #	Species	DBH Size (In Inches)	Condition	Form	Comments
1	1	Austrian Pine	13"	5	5	Dead
2	2	Austrian Pine	18"	5	5	
3	9	Austrian Pine	22"	3	3	
4	10	Austrian Pine	11"	5	5	
5	11	Scotts Pine	18"	5	5	
6	12	Black Cherry	10"	3	4	Declining
7	13	Red Oak	23"	3	4	Hollow
8	14	Fir	10"	4	4	
9	15	Fir	9"	3	3	
10	16	Fir	10"	3	3	
11	17	Fir	9"	3	3	
12	18	Black Cherry	8"	3	3	
13	19	Austrian Pine	11"	4	4	Declining
14	25	Austrian Pine	22"	4	4	
15	26	Black Cherry	13"	4	3	
16	27	Black Cherry	11"	3	3	
17	28	Austrian Pine	13"	4	3	
18	29	Black Cherry	9"	3	4	
19	30	Red Oak	26"	3	3	Lean
20	32	Black Cherry	13"	5	5	Lean
21	33	Scotts Pine	9"	3	3	
22	35	Black Cherry	10"	3	3	
23	36	Austrian Pine	19"	4	3	
24	37	Austrian Pine	9"	4	4	
25	38	Austrian Pine	23"	3	3	
26	39	Austrian Pine	9"	5	5	
27	40	Austrian Pine	11"	4	5	
28	41	Black Cherry	9"	4	3	
29	42	Austrian Pine	11"	3	3	
30	43	American Elm	21"	2	2	
31	81	Ash	10"	5	5	
32	82	American Elm	12"	2	2	
33	83	Ash	14",13"	5	5	
34	84	Red Oak	20"	2	2	
35	85	Red Oak	14"	2	2	
36	86	Red Oak	10"	2	3	
37	87	Red Oak	11"	2	2	
38	88	Red Oak	11"	2	3	
39	89	Red Oak	14"	2	3	
40	90	Ash	17"	5	5	
41	91	Ash	9"	5	5	
42	92	Red Oak	20"	3	4	Lean
43	93	Red Oak	36"	2	2	
44	94	Red Oak	17"	2	3	
45	95	Red Oak	14"	2	3	
46	96	American Elm	16"	5	5	
47	97	Black Cherry	9"	4	4	
48	98	Red Oak	14"	3	4	Lean
49	99	Red Oak	16"	2	2	
50	100	Red Oak	15"	3	3	Lean
51	101	Red Oak	15"	2	3	
52	102	Red Oak	14"	3	3	
53	103	Ash	10"	5	5	
54	104	Red Oak	11"	1	1	
55	105	Red Oak	9"	2	1	
56	106	Red Oak	9"	1	1	
57	135	American Elm	10"	2	3	
58	136	Ash	11"	5	5	
59	137	Walnut	13"	4	4	Decay
60	138	Tulip Poplar	21"	1	1	
61	139	Red Cedar	11"	3	2	
62	140	Red Oak	10"	3	3	
63	141	Red Cedar	10"	3	3	
64	142	Red Oak	14"	3	3	

65	143	Ash	12"	5	5	
66	144	Red Cedar	12"	4	3	
67	145	Red Cedar	8", 8"	4	5	
68	146	Red Cedar	14"	3	3	
69	147	Red Cedar	13"	2	3	
70	148	American Elm	15"	5	5	
71	149	Tulip Poplar	9"	2	3	
72	150	Red Oak	17"	2	2	
73	151	Red Oak	19"	2	3	Lean
74	152	Red Oak	17"	2	2	
75	153	Red Oak	8"	2	2	
76	154	Red Oak	9"	2	3	
77	155	Tulip Poplar	19"	2	2	
78	156	Red Oak	10"	2	3	Lean
79	157	Red Oak	8"	2	2	
80	158	Red Oak	9"	3	3	
81	159	Honey Locust	18"	4	3	
82	160	Honey Locust	20"	3	3	
83	161	Swamp White Oak	14"	2	2	
84	162	Red Oak	23"	2	1	
85	163	Swamp White Oak	19"	1	2	
86	164	Honey Locust	13"	4	4	
87	165	Red Oak	22"	1	1	
88	166	Swamp White Oak	20"	1	2	
89	167	Bur Oak	18"	1	1	
90	168	Red Oak	10"	2	2	
91	169	Red Oak	9"	3	4	Lean
92	170	Red Oak	15"	2	3	
93	171	Red Oak	14"	2	2	
94	172	Red Oak	15"	2	3	
95	173	Red Oak	9"	2	3	
96	174	Red Oak	17"	2	3	Lean
97	175	Red Oak	20"	2	2	
98	176	Black Cherry	11"	5	5	
99	177	Black Cherry	10"	5	5	
100	178	Cottonwood	38"	2	2	
101	179	American Elm	14"	2	2	
102	180	Ash	13"	5	5	
103	181	Ash	13"	5	5	
104	182	Mulberry	39"	3	3	Decay
105	183	Magnolia	11"	3	4	
106	184	Siberian Elm	13"	3	3	
107	185	Sugar Maple	20"	3	2	
108	186	Hackberry	15"	2	4	
109	187	Sugar Maple	18"	3	4	Split Trunk
110	188	Hackberry	21"	2	3	
111	189	Sugar Maple	20"	1	1	
112	190	Cottonwood	40"	4	4	Decay
113	191	Red Oak	18"	1	1	
114	192	Magnolia	14", 14", 14"	3	3	Decay
115	193	Silver Poplar	14"	3	4	Lean
116	194	American Elm	13"	2	3	
117	195	American Elm	15"	3	3	
118	196	Osage Orange	15", 15"	2	3	
119	197	Mulberry	12"	3	4	
120	198	Black Cherry	13"	3	3	
121	199	American Elm	13"	3	3	
122	200	Mulberry	10"	5	5	
123	201	Red Oak	11"	2	2	
124	202	Silver Poplar	11"	3	3	
125	203	Ash	9"	5	5	
126	204	Ash	13"	5	5	
127	205	American Elm	8"	2	3	
128	206	American Elm	9"	4	4	Topped
129	207	Swamp White Oak	9"	2	2	
130	208	American Elm	8"	2	3	
131	209	American Elm	9"	4	4	Topped
132	210	Red Oak	9"	4	4	By power pole
133	211	American Elm	8"	4	4	
134	212	American Elm	12"	2	3	

135	213	American Elm	9"	3	4	Lean
136	214	Red Oak	12"	3	3	
137	215	Red Oak	10"	3	4	
138	216	American Elm	12"	2	3	
139	217	American Elm	10"	3	2	
140	218	Ash	11"	5	5	
141	219	Red Oak	8"	3	4	
142	220	Red Oak	20"	2	3	
143	221	Red Oak	9"	2	2	
144	222	Red Oak	21"	1	1	
145	223	Red Oak	15"	1	2	
146	224	Red Oak	15"	2	2	
147	225	Red Oak	15"	2	2	
148	226	Red Oak	15"	2	2	
149	227	Red Oak	20"	2	2	
150	228	American Linden	15"	3	3	
151	229	Ginkgo	10"	3	4	
152	230	Red Oak	8"	3	4	Lean
153	231	American Linden	11"	2	3	
154	232	American Linden	12"	2	3	
155	233	Red Oak	11"	2	3	
156	234	Ash	13"	5	5	
157	235	Ash	12"	5	5	
158	236	Ash	9"	5	5	
159	237	Ash	8"	5	5	
160	238	Silver Maple	36"	2	3	Included Bark
161	239	Red Oak	21"	2	3	Lean
162	240	Red Oak	20"	2	3	Lean
163	241	Red Oak	28"	2	3	
164	242	Silver Maple	10"	3	4	
165	243	American Elm	9"	3	3	
166	244	American Linden	10"	3	4	
167	245	Red Oak	8"	5	5	Oak Wilt
168	246	Red Oak	13"	3	2	
169	247	Red Oak	9"	3	3	
170	248	Red Oak	18"	3	3	
171	249	Red Oak	18"	2	2	
172	250	American Linden	9"	3	4	
173	251	Red Oak	8"	3	3	
174	252	Red Oak	8"	3	3	
175	253	Ash	8"	5	5	
176	254	Red Oak	21"	3	4	Lean
177	255	American Linden	9"	3	4	
178	256	Red Oak	12"	2	3	
179	257	Red Oak	11"	2	2	
180	258	Red Oak	13"	2	2	
181	259	Red Oak	8"	3	4	
182	260	Red Oak	8"	2	3	
183	261	Red Oak	13"	2	3	
184	262	Black Cherry	13"	4	4	Hollow
185	263	Red Oak	10"	3	3	
186	264	American Elm	15"	3	4	
187	265	Sassafras	8"	4	4	
188	266	Sassafras	10"	4	4	
189	267	Red Oak	11"	3	4	
190	268	Red Oak	17"	3	3	
191	269	Red Oak	9"	3	3	
192	270	Red Oak	12"	2	2	
193	271	Red Oak	13"	2	2	
194	272	Red Oak	10"	3	3	
195	273	Red Oak	17"	2	2	
196	274	Red Oak	9"	2	3	
197	275	Red Oak	13"	2	3	
198	276	Red Oak	13"	2	3	
199	277	Red Oak	12"	2	2	
200	278	American Linden	12"	3	3	
201	279	Silver Maple	8"	3	3	
202	280	Ash	9"	5	5	
203	281	Red Oak	11"	2	3	
204	282	Red Oak	13"	3	3	

205	283	Red Oak	8"	3	3	
206	284	Red Oak	9"	3	3	
207	285	Red Oak	11"	3	3	
208	286	Red Oak	11"	3	3	
209	287	Red Oak	22"	2	2	
210	288	Red Oak	8"	3	3	
211	289	American Elm	9"	3	3	
212	290	American Elm	8"	3	3	
213	291	American Elm	10"	2	3	
214	292	American Elm	23"	2	3	Lean
215	293	Red Oak	11"	3	3	
216	294	Red Oak	20"	3	2	
217	295	Red Oak	18"	2	3	Lean
218	296	Red Oak	20"	1	1	
219	297	Red Oak	17"	2	2	
220	298	Bur Oak	13"	3	3	
221	299	Red Oak	10"	3	3	
222	300	Bur Oak	13"	3	2	
223	301	Tulip Poplar	19"	1	2	
224	302	American Elm	17"	1	2	
225	303	Black Walnut	9"	2	3	
226	304	Red Oak	11"	3	3	
227	305	Red Oak	10"	3	4	
228	306	Red Oak	9"	3	3	
229	307	Red Oak	10"	3	4	
230	308	Red Oak	15"	3	2	
231	309	Red Oak	8"	3	3	
232	310	Red Oak	9	3	3	
233	311	Red Oak	9"	3	3	
234	312	American Elm	10"	2	3	
235	313	American Elm	11"	3	3	
236	314	White Oak	30"	2	3	Stress crack
237	315	White Oak	30"	2	3	Stress crack
238	316	Red Oak	17"	2	2	
239	317	Red Oak	14"	2	3	
240	318	Red Oak	18"	3	3	
241	319	Red Oak	13"	3	3	
242	320	Red Oak	12"	3	3	
243	321	Red Oak	15"	2	3	
244	322	Silver Maple	10"	4	4	Declining
245	323	Silver Maple	15"	3	3	Stressed
246	324	Red Oak	8"	3	3	
247	325	Swamp White Oak	24"	1	2	
248	326	Red Maple	9"	2	2	
249	327	Black Cherry	10"	5	5	
250	328	Ash	9"	5	5	
251	329	American Elm	10"	3	3	
252	330	Ash	13"	5	5	
253	331	Red Oak	23"	1	1	
254	332	Red Oak	20"	1	1	
255	333	Ash	11"	5	5	
256	334	White Oak	9"	3	4	Lean
257	335	White Oak	18"	2	2	
258	336	Swamp White Oak	22"	2	3	
259	337	Black Cherry	11"	5	5	
260	338	Red Oak	16"	2	2	
261	339	American Linden	8"	3	4	
262	340	Red Oak	19"	2	2	
263	341	Red Maple	9"	3	4	
264	342	White Walnut	10"	3	3	
265	343	White Walnut	10"	3	4	Lean
266	344	Red Oak	18"	2	2	
267	345	Red Oak	17"	2	3	
268	346	Red Oak	20"	2	3	
269	347	Ash	10", 7"	5	5	
270	348	Red Maple	8"	3	4	
271	349	Red Maple	11"	2	2	
272	350	American Elm	11"	3	3	
273	351	Ash	11"	5	5	
274	352	Red Maple	19"	3	4	Decay

275	353	Red Maple	9"	3	4	
276	354	Swamp White Oak	18"	2	3	
277	355	Swamp White Oak	11"	2	2	
278	356	Swamp White Oak	14"	2	1	
279	357	Swamp White Oak	10"	2	3	
280	358	Red Maple	12"	2	2	
281	359	Swamp White Oak	11"	2	3	
282	360	Swamp White Oak	15"	2	3	
283	361	Swamp White Oak	16"	2	2	
284	362	Ash	12"	5	5	
285	363	Red Maple	9"	2	3	
286	364	Red Maple	8"	2	3	
287	365	Red Maple	12"	3	3	
288	366	Red Maple	8"	3	3	
289	367	Red Maple	14", 9"	3	3	
290	368	Red Maple	15"	4	4	Decay
291	369	Red Maple	20"	2	3	
292	370	Red Maple	8"	3	3	
293	371	Red Maple	10"	3	3	
294	372	Red Maple	9"	2	3	
295	373	Red Maple	13"	3	3	
296	374	Red Maple	14"	2	2	
297	375	Red Maple	15"	3	2	
298	376	Red Maple	14"	2	2	
299	377	American Elm	9"	5	5	
300	378	Red Maple	10"	3	3	
301	379	Red Maple	13"	2	3	
302	380	Red Maple	15", 10"	3	3	
303	436	American Elm	12"	4	4	
304	437	American Elm	21"	2	2	
305	438	American Elm	10"	5	5	
306	439	Silver Poplar	18"	4	4	
307	440	American Elm	12"	3	3	
308	441	Red Maple	11"	2	3	
309	442	Ash	9"	5	5	
310	443	Ash	17"	5	5	
311	444	Ash	19"	5	5	
312	445	American Elm	12"	2	3	
313	446	Red Oak	14"	2	3	
314	447	American Elm	8"	5	5	
315	448	Swamp White Oak	13"	2	3	
316	449	Red Maple	22"	3	3	
317	450	Red Maple	10"	2	2	
318	451	Red Maple	11"	2	3	
319	452	Red Maple	11"	2	2	
320	453	Red Maple	8"	2	2	
321	454	Ash	8"	5	5	
322	455	Red Maple	12"	2	2	
323	456	Red Maple	12"	2	3	
324	457	Red Maple	11"	2	2	
325	458	Red Maple	10"	2	2	
326	459	Black Cherry	10"	5	5	
327	460	Red Maple	12"	2	3	
328	461	Red Maple	17"	2	3	
329	462	Red Maple	11"	2	3	
330	463	Red Maple	8"	3	3	
331	464	Red Maple	8"	5	5	
332	465	Red Maple	8"	3	3	
333	466	Red Maple	9"	3	4	
334	467	Ash	12"	5	5	
335	468	Red Maple	10"	3	3	
336	469	Red Maple	8"	3	3	
337	470	Red Maple	9"	2	3	
338	471	Ash	9"	5	5	
339	472	Red Maple	9"	2	3	
340	473	Sassafras	10"	3	3	
341	474	Red Maple	9"	2	3	
342	475	Red Maple	9"	3	3	
343	476	Red Maple	10"	3	3	
344	477	Red Maple	9"	3	3	

345	478	Red Maple	8"	3	4	Decay
346	479	Red Maple	20"	2	3	
347	480	Sassafras	11"	3	3	
348	481	Ash	9"	5	5	
349	482	Red Maple	10"	3	3	
350	483	Red Maple	9"	3	3	
351	484	Red Maple	8"	3	3	
352	485	Red Maple	9"	3	3	
353	486	Red Maple	8"	3	2	
354	487	Red Maple	8"	2	3	
355	488	Red Maple	13"	2	2	
356	489	Red Oak	9"	3	3	
357	490	Red Maple	8"	3	3	
358	491	Red Maple	9"	3	3	
359	492	Tulip Poplar	8"	1	1	
360	493	Red Oak	8"	3	4	
361	494	Red Maple	13"	2	2	
362	495	Red Maple	13"	2	2	
363	496	Red Maple	8"	2	3	
364	497	Red Maple	9"	2	2	
365	498	Ash	12"	5	5	
366	499	Red Maple	9", 8", 6"	2	2	
367	500	Red Maple	18"	1	1	
368	501	Red Oak	9"	2	3	
369	502	Red Maple	9"	3	3	
370	503	Ash	14"	5	5	
371	504	Red Oak	9"	3	3	
372	505	Ash	10"	5	5	
373	506	Red Maple	12"	3	3	
374	511	Red Maple	9"	2	3	
375	512	Tulip Poplar	17"	2	2	
376	513	Red Oak	13"	2	2	
377	514	Sassafras	10"	3	3	
378	515	Red Oak	12"	2	3	
379	516	American Elm	8"	3	2	
380	517	Red Oak	11"	3	3	
381	518	Red Oak	9"	3	3	
382	539	White Oak	14"	2	3	
383	540	White Oak	14"	3	3	
384	541	White Oak	11"	3	3	
385	542	Red Oak	22"	2	3	
386	543	Red Oak	12"	2	3	
387	544	Red Oak	10"	3	4	Lean
388	545	Red Oak	13"	3	3	Lean
389	546	White Oak	14"	1	2	
390	547	White Oak	14"	1	1	
391	548	White Oak	10"	2	2	
392	588	Black Cherry	8"	5	5	
393	589	Black Cherry	13"	5	5	
394	590	Black Cherry	9"	5	5	
395	591	Red Oak	22"	2	3	Lean
396	592	Red Oak	19"	2	2	
397	593	Red Oak	19"	2	2	
398	594	Bur Oak	19"	2	2	
399	595	Red Oak	9"	3	3	
400	596	Red Oak	10"	3	3	
401	597	Red Oak	12"	3	3	
402	598	White Oak	12", 11"	2	2	
403	599	White Oak	20"	1	2	
404	600	White Oak	20"	1	2	
405	601	Red Oak	13"	3	4	Lean
406	602	White Oak	9"	2	2	
407	603	White Oak	20"	2	3	
408	604	Red Oak	13"	2	2	
409	605	Black Cherry	11"	3	4	
410	606	Red Oak	20"	2	2	
411	607	Red Oak	14"	3	3	
412	608	Red Oak	14"	2	3	
413	609	Red Oak	20"	2	2	
414	610	Black Cherry	12"	3	4	

415	611	Red Oak	13"	3	4	
416	612	Black Cherry	9"	5	5	
417	613	Red Oak	22"	3	2	
418	614	Red Oak	22"	3	2	
419	615	Red Oak	20"	2	3	
420	616	Red Oak	12"	2	4	
421	617	Red Oak	19"	3	2	
422	618	Black Cherry	12"	3	4	
423	619	Red Oak	13"	3	3	
424	620	Red Oak	14"	3	3	
425	621	Red Oak	20"	1	3	Included Bark
426	622	Red Oak	21"	1	3	
427	623	Black Cherry	18"	4	4	
428	624	Red Oak	12"	2	3	Lean
429	625	Red Oak	11"	2	3	Lean
430	626	Black Cherry	9"	5	5	
431	627	Red Oak	21"	3	3	Lean
432	628	White Oak	30"	4	4	lightning strike, decayed
433	629	White Oak	38"	2	2	
434	630	Red Oak	19"	2	2	
435	631	Black Cherry	12"	5	5	
436	632	Black Cherry	13"	5	5	
437	633	Black Cherry	13"	5	5	
438	634	Black Cherry	20"	5	5	
439	635	Black Cherry	12"	5	5	
440	636	Black Cherry	15"	5	5	
441	637	Ash	14"	5	5	
442	638	Ash	10"	5	5	
443	639	Ash	10"	5	5	
444	640	Red Oak	9"	2	2	
445	641	Black Cherry	15"	1	1	
446	642	Red Oak	12"	2	2	
447	643	Red Oak	11"	2	2	
448	644	Red Oak	14"	2	3	
449	645	American Elm	10"	3	3	Lean
450	646	American Elm	12"	3	4	Lean
451	647	Red Oak	16"	2	3	
452	648	Black Cherry	9"	5	5	
453	649	American Elm	10"	3	4	
454	650	Sycamore	20"	3	3	
455	651	Sycamore	18"	3	3	
456	652	Sycamore	22"	2	3	
457	653	American Elm	18"	5	5	
458	654	Sycamore	11"	5	5	
459	655	Sycamore	18"	3	3	
460	656	Sycamore	14"	3	4	Lean
461	657	Sycamore	10"	4	4	
462	658	Sycamore	19"	2	2	
463	659	Black Cherry	9"	5	5	
464	660	Sycamore	22"	1	2	
465	661	Sycamore	18"	3	3	
466	662	American Elm	12"	3	3	
467	663	Sycamore	9"	3	4	Lean
468	664	American Elm	17"	3	4	
469	665	Sycamore	18"	3	3	
470	666	Sassafras	10"	5	5	
471	667	Black Alder	10"	4	4	
472	668	Tulip Poplar	20"	1	2	
473	669	American Elm	12"	2	3	
474	670	Ash	9", 5"	5	5	
475	671	Red Oak	9"	3	3	
476	672	Red Oak	19"	1	1	
477	673	Red Maple	9"	2	2	
478	674	Black Alder	9"	2	2	
479	675	Red Maple	9", 7"	2	3	
480	676	Ash	9"	5	5	
481	677	Ash	8"	5	5	
482	678	Ash	9"	5	5	
483	679	Black Cherry	9"	5	5	
484	680	White Oak	14"	1	2	

485	681	Tulip Poplar	19"	1	1	
486	682	Tulip Poplar	19"	1	1	
487	683	Tulip Poplar	19"	1	2	
488	684	Black Cherry	12"	5	5	
489	685	Red Oak	16"	2	3	
490	686	Red Oak	12"	3	3	
491	687	Black Cherry	14"	5	5	
492	688	American Linden	18"	2	3	Lean
493	689	American Linden	17"	3	3	Lean
494	690	Black Cherry	15"	5	5	
495	691	Black Cherry	19"	5	5	
496	692	Black Cherry	13"	5	5	
497	693	Red Oak	26"	2	3	Lean
498	694	Black Cherry	13"	5	5	
499	695	Tulip Poplar	22"	4	4	Half split out
500	696	Black Cherry	9"	5	5	
501	697	Black Cherry	9"	5	5	
502	698	Black Cherry	10"	4	4	
503	699	Black Cherry	9"	5	5	
504	700	Sugar Maple	21"	2	2	
505	701	American Linden	15"	3	4	Lean
506	702	American Linden	14"	3	4	Lean
507	703	Black Cherry	10"	5	5	Lean
508	704	American Linden	12", 7"	3	3	
509	705	American Linden	13"	3	3	
510	706	Black Cherry	13"	5	5	
511	707	Black Cherry	12"	5	5	
512	708	Black Cherry	14", 10", 9"	3	4	
513	709	Black Alder	9"	2	2	
514	715	Red Oak	9"	2	3	Lean
515	716	Ash	12"	5	5	
516	717	Red Oak	17"	2	3	
517	718	Red Oak	8"	2	2	
518	719	Ash	9"	5	5	
519	781	Ash	10"	5	5	
520	782	Ash	10"	5	5	
521	783	Ash	12"	5	5	
522	784	American Elm	10"	3	4	Lean
523	785	American Elm	13"	3	3	
524	786	Mulberry	19"	3	3	Decay
525	787	Black Cherry	9"	5	5	
526	788	Ash	9"	5	5	
527	789	Ash	9"	5	5	
528	813	Red Oak	18"	3	3	
529	814	White Oak	11"	5	5	
530	815	White Oak	10"	5	5	
531	816	Red Oak	10"	3	3	
532	817	American Elm	10"	3	3	
533	818	Red Oak	18"	2	2	
534	819	Red Oak	18"	1	1	
535	820	Ash	9"	5	5	
536	821	Red Oak	9"	4	4	topped wires
537	822	White Oak	9"	3	4	Sided back wires
538	823	Red Oak	8	4	4	
539	824	White Oak	12"	2	3	
540	825	Ash	10"	5	5	
541	826	Ash	14"	5	5	
542	827	American Elm	13"	3	3	
543	828	American Elm	9"	3	4	
544	829	Ash	12"	5	5	
545	830	Red Oak	13"	2	2	
546	831	Red Oak	12"	2	3	
547	832	Red Oak	9"	3	3	
548	833	American Elm	9"	4	4	Lean
549	834	White Oak	12"	5	5	

Tree Survey: Completed by Adam Keppel, Certified Arborist IL-5152A

To to Remain

Count	Tree #	Species	DBH Size (In Inches)	Condition	Form	Comments	Location
1	3	Mulberry	13"	3	4		Outlot H
2	4	Mulberry	10"	3	4		Outlot H
3	5	Hemlock	7"	3	3		Outlot H
4	6	Mulberry	14"	3	2		Outlot H
5	7	Mulberry	13"	3	3		Outlot H
6	8	Mulberry	12"	3	4		Outlot H
7	20	Mulberry	11"	3	4		Outlot H
8	21	Mulberry	11"	3	4		Outlot H
9	22	Mulberry	12"	3	3		Outlot H
10	23	Mulberry	13"	5	5		Outlot H
11	24	Black Cherry	8"	4	4		Outlot H
12	31	Red Oak	32"	2	2		Outlot H
13	34	Mulberry	9"	3	4	Lean	Outlot H
14	44	Mulberry	18"	3	4	Lean	Outlot H
15	45	Mulberry	10"	3	3		Outlot H
16	46	Mulberry	18"	3	4	Lean, decay	Outlot H
17	47	Austrian Pine	13"	3	3		Outlot H
18	48	Austrian Pine	19"	3	4	Lean	Outlot H
19	49	Austrian Pine	10"	5	5		Outlot H
20	50	Austrian Pine	10"	5	5		Outlot H
21	51	Austrian Pine	19"	3	3		Outlot H
22	52	American Elm	30"	2	2		Outlot H
23	53	Red Oak	28"	3	4		Outlot H
24	54	Red Oak	20"	3	4		Outlot H
25	55	Black Cherry	10"	3	4		Outlot H
26	56	Fir	9"	4	4		Outlot H
27	57	Ash	10"	5	5		Outlot H
28	58	Poplar	13"	4	3		Outlot H
29	59	Shagbark Hickory	23"	2	2		Outlot H
30	60	White Oak	30"	3	3		Outlot H
31	61	Black Cherry	10"	4	4	Lean	Outlot H
32	62	White Oak	27"	2	2		Outlot H
33	63	Mulberry	20"	3	4	Lean	Outlot H
34	64	Bur Oak	16"	2	2		Outlot H
35	65	Mulberry	9"	4	4		Outlot H
36	66	White Oak	21"	2	3	Lean	Outlot H
37	67	White Oak	37"	2	3	One sided	Outlot H
38	68	American Elm	11"	2	2		Outlot H
39	69	American Elm	10"	3	2		Outlot H
40	70	American Elm	8"	3	3		Outlot H
41	71	Red Oak	37"	2	3		Outlot H
42	72	Black Cherry	9"	3	4		Outlot H
43	73	Black Cherry	22"	5	5		Outlot H
44	74	Black Cherry	14"	5	5		Outlot H
45	75	Black Cherry	15"	5	5		Outlot H
46	76	Black Cherry	9"	4	4		Outlot H
47	77	Black Cherry	13"	5	5		Outlot H
48	78	Ash	12"	5	5		Outlot H
49	79	Black Cherry	9"	5	5		Outlot H
50	80	Red Oak	12"	3	4		Outlot H
51	107	Red Oak	9"	2	2		Outlot G
52	108	Red Oak	8"	2	3		Outlot G
53	109	Red Oak	23", 10"	2	2		Outlot G
54	110	White Oak	31"	2	2		Outlot G
55	111	White Oak	25"	4	3		Outlot G
56	112	White Oak	27"	3	3		Outlot G
57	113	Shagbark Hickory	10"	2	3	Lean	Outlot G
58	114	Red Oak	18"	3	4	Decay	Outlot G
59	115	Red Oak	19"	2	3		Outlot G
60	116	Red Oak	14"	3	3		Outlot G
61	117	Red Oak	20"	2	2		Outlot G
62	118	Red Oak	21"	3	2		Outlot G
63	119	Box Elder	10"	5	5		Outlot G
64	120	American Elm	9"	3	3		Outlot G
65	121	Tulip Poplar	10"	2	2		Outlot G
66	122	Tulip Poplar	22"	2	3	Lean	Outlot G
67	123	Red Oak	13"	3	3		Outlot G
68	124	Tulip Poplar	12"	2	3	Lean	Outlot G
69	125	American Elm	13"	2	2		Outlot G
70	126	Cottonwood	34"	2	2		Outlot G

71	127	Red Maple	9"	1	2		Outlot G
72	128	Ash	9"	5	5		Outlot G
73	129	Box Elder	11"	4	4		Outlot G
74	130	Red Maple	9"	2	2		Outlot G
75	131	Red Maple	8"	2	2		Outlot G
76	132	Ash	11"	5	5		Outlot G
77	133	Ash	10"	5	5		Outlot G
78	134	Red Maple	10"	2	2		Outlot G
79	381	Ash	11"	5	5		Outlot G
80	382	Red Maple	10"	3	4		Outlot G
81	383	Red Maple	9"	3	3		Outlot G
82	384	Swamp White Oak	10"	3	4		Outlot G
83	385	Ash	9"	5	5		Outlot G
84	386	Red Maple	17"	3	3		Outlot G
85	387	Swamp White Oak	12"	3	3		Outlot G
86	388	Red Maple	12"	2	3		Outlot G
87	389	Swamp White Oak	12"	2	2		Outlot G
88	390	Swamp White Oak	13"	2	3		Outlot G
89	391	Swamp White Oak	9"	3	3		Outlot G
90	392	Red Maple	13"	2	3		Outlot G
91	393	Swamp White Oak	12"	3	3		Outlot G
92	394	Red Oak	20"	2	3		Outlot G
93	395	Red Maple	9"	3	3		Outlot G
94	396	Ash	12"	5	5		Outlot G
95	397	Swamp White Oak	10"	2	3		Outlot G
96	398	Red Oak	19"	2	2		Outlot G
97	399	Red Oak	12"	2	3	Lean	Outlot G
98	400	Red Oak	13"	3	3		Outlot G
99	401	Red Maple	15"	3	3		Outlot G
100	402	Red Maple	15"	2	3		Outlot G
101	403	Red Maple	13"	2	2		Outlot G
102	404	Red Maple	9"	3	3		Outlot G
103	405	Red Maple	9"	3	3		Outlot G
104	406	Red Maple	9"	3	3		Outlot G
105	407	American Elm	13"	5	5		Outlot G
106	408	Red Maple	12"	2	3		Outlot G
107	409	Red Maple	6", 6"	3	3		Outlot G
108	410	Red Oak	8"	3	4		Outlot G
109	411	Red Oak	12"	2	2		Outlot G
110	412	American Elm	12"	3	4		Outlot G
111	413	American Elm	9"	4	4		Outlot G
112	414	American Elm	9"	4	4		Outlot G
113	415	Ash	8"	5	5		Outlot G
114	416	Red Maple	10"	2	3		Outlot G
115	417	Ash	10"	5	5		Outlot G
116	418	Ash	9"	5	5		Outlot G
117	419	Red Maple	11"	3	3		Outlot G
118	420	Ash	8"	5	5		Outlot G
119	421	Red Maple	8"	3	2		Outlot G
120	422	Red Maple	10"	3	3		Outlot G
121	423	American Elm	12"	2	3		Outlot G
122	424	Red Maple	12"	2	2		Outlot G
123	425	Ash	18"	5	5		Outlot G
124	426	Red Oak	10"	2	3		Outlot G
125	427	Red Oak	8"	3	3		Outlot G
126	428	Red Oak	9"	3	3		Outlot G
127	429	Red Oak	9"	2	2		Outlot G
128	430	American Elm	10"	3	4		Outlot G
129	431	Silver Poplar	17"	3	4	Lean	Outlot G
130	432	Silver Poplar	15"	4	4		Outlot G
131	433	American Elm	10"	5	5		Outlot G
132	434	Red Oak	8"	2	2		Outlot G
133	435	Sassafras	8"	3	3		Outlot G
134	507	Red Maple	10"	2	3		Outlot G
135	508	Ash	10"	5	5		Outlot G
136	509	Red Maple	12"	2	2		Outlot G
137	510	Red Oak	21"	1	1		Outlot G
138	519	Red Oak	10"	2	3		Outlot G
139	520	Ash	13"	5	5		Outlot G
140	521	American Elm	10"	2	3		Outlot G
141	522	American Elm	10", 10"	3	4		Outlot G
142	523	Red Oak	15"	3	3		Outlot G
143	524	Black Cherry	10"	3	4		Outlot G
144	525	Shagbark Hickory	16"	3	2		Outlot G

145	526	Black Cherry	12", 10"	5	5		Outlot G
146	527	Red Cedar	9"	3	4		Outlot G
147	528	American Elm	17"	4	4		Outlot G
148	529	Red Oak	15"	3	4		Outlot G
149	530	White Oak	15"	1	1		Outlot G
150	531	White Oak	14"	1	2		Outlot G
151	532	White Oak	13"	2	3		Outlot G
152	533	White Oak	9"	5	5		Outlot G
153	534	White Oak	9"	1	1		Outlot G
154	535	White Oak	24"	1	1		Outlot G
155	536	White Oak	10"	2	2		Outlot G
156	537	White Oak	12"	2	2		Outlot G
157	538	White Oak	20"	2	2		Outlot G
158	549	White Oak	10"	2	2		Outlot G
159	550	Shagbark Hickory	12"	1	2		Outlot G
160	551	Red Oak	16"	3	3		Outlot G
161	552	Shagbark Hickory	15"	2	2		Outlot G
162	553	Red Oak	13"	3	3		Outlot G
163	554	Red Oak	14", 11"	3	2		Outlot G
164	555	White Oak	36"	1	3		Outlot G
165	556	White Oak	30"	2	2		Outlot G
166	557	Shagbark Hickory	14"	1	2		Outlot G
167	558	Black Cherry	14"	2	3		Outlot G
168	559	Red Oak	14"	2	3	Lean	Outlot G
169	560	Red Oak	15"	3	3		Outlot G
170	561	Shagbark Hickory	9"	2	2		Outlot G
171	562	Shagbark Hickory	9"	2	3		Outlot G
172	563	Shagbark Hickory	9"	2	3		Outlot G
173	564	Shagbark Hickory	9"	2	3		Outlot G
174	565	Red Oak	13"	2	3	Lean	Outlot G
175	566	American Elm	9"	3	3		Outlot G
176	567	Shagbark Hickory	13"	3	2		Outlot G
177	568	Black Cherry	10"	3	2	Hollow	Outlot G
178	569	Shagbark Hickory	14"	2	3		Outlot G
179	570	White Oak	13", 13"	2	2		Outlot G
180	571	Shagbark Hickory	11"	2	2		Outlot G
181	572	Shagbark Hickory	14"	2	2		Outlot G
182	573	Shagbark Hickory	12"	4	4		Outlot G
183	574	Shagbark Hickory	10"	2	3		Outlot G
184	575	Red Oak	20", 14"	3	3		Outlot G
185	576	Shagbark Hickory	10"	2	2		Outlot G
186	577	White Oak	16"	2	2		Outlot G
187	578	White Oak	14"	2	3		Outlot G
188	579	White Oak	13"	2	3		Outlot G
189	580	White Oak	8"	3	3		Outlot G
190	581	White Oak	14"	2	3	Lean	Outlot G
191	582	Red Oak	8"	3	3		Outlot G
192	583	White Oak	8"	3	3		Outlot G
193	584	Red Oak	14"	2	2		Outlot G
194	585	Red Oak	12"	2	3		Outlot G
195	586	Red Oak	11"	3	3		Outlot G
196	587	Red Oak	9"	2	3		Outlot G
197	710	Ash	13"	5	5		Outlot F
198	711	Black Alder	9"	2	2		Outlot F
199	712	Red Oak	14"	2	3	Lean	Outlot F
200	713	Red Oak	14"	2	2		Outlot F
201	714	Red Oak	17"	2	2		Outlot F
202	720	Ash	9"	5	5		Outlot F
203	721	Red Maple	11"	3	3		Outlot F
204	722	Ash	9"	5	5		Outlot F
205	723	Sweet Gum	16"	2	2		Outlot F
206	724	Sweet Gum	16"	2	2		Outlot F
207	725	Black Alder	12"	2	3	Decay	Outlot F
208	726	Black Alder	9"	5	5		Outlot F
209	727	Sycamore	26"	2	2		Outlot F
210	728	Sycamore	20"	2	2		Outlot F
211	729	Sycamore	19"	2	3	Lean	Outlot F
212	730	Sycamore	22"	2	2		Outlot F
213	731	Sycamore	16"	3	4	Lean	Outlot F
214	732	Ash	17"	5	5		Outlot F
215	733	Sweet Gum	17"	1	1		Outlot F
216	734	Black Alder	9"	2	3		Outlot F
217	735	Black Cherry	8"	3	4	Lean	Outlot F
218	736	Ash	9"	5	5		Outlot F

219	737	Tulip Poplar	14"	2	3		Outlot F
220	738	Ash	12"	5	5		Outlot F
221	739	Ash	9"	5	5		Outlot F
222	740	Red Oak	11"	2	2		Outlot F
223	741	Red Oak	16"	3	3		Outlot F
224	742	Red Oak	14"	1	2		Outlot F
225	743	Ash	10"	5	5		Outlot F
226	744	Ash	9"	5	5		Outlot F
227	745	Red Oak	10", 9"	2	3		Outlot F
228	746	Ash	9"	5	5		Outlot F
229	747	Ash	9", 8"	5	5		Outlot F
230	748	Ash	9"	5	5		Outlot F
231	749	Ash	10"	5	5		Outlot F
232	750	Red Oak	17"	2	2		Outlot F
233	751	Red Oak	21"	2	2		Outlot F
234	752	American Elm	13"	3	2		Outlot F
235	753	Ash	11"	5	5		Outlot F
236	754	Ash	11"	5	5		Outlot F
237	755	Sweet Gum	20"	2	2		Outlot F
238	756	American Elm	18"	3	4	Split	Outlot F
239	757	American Elm	10"	3	3		Outlot F
240	758	American Elm	18"	5	5		Outlot F
241	759	Ash	9"	5	5		Outlot F
242	760	Ash	23"	5	5		Outlot F
243	761	American Elm	23"	3	4		Outlot F
244	762	Ash	9"	5	5		Outlot F
245	763	Ash	9"	5	5		Outlot F
246	764	Ash	10"	5	5		Outlot F
247	765	Ash	9"	5	5		Outlot F
248	766	Red Oak	26"	2	2		Outlot F
249	767	Red Oak	17"	2	3		Outlot F
250	768	Red Oak	21"	2	3		Outlot F
251	769	Red Oak	20"	2	3		Outlot F
252	770	Red Oak	18"	2	3		Outlot F
253	771	Red Oak	25"	2	2		Outlot F
254	772	Red Oak	18"	2	3	Lean	Outlot F
255	773	Red Oak	14"	2	3	Lean	Outlot F
256	774	Red Oak	9"	3	3	Lean	Outlot F
257	775	Red Oak	30"	1	2		Outlot F
258	776	Sassafras	8"	3	3		Outlot F
259	777	American Elm	25"	2	2		Outlot F
260	778	Sugar Maple	13"	2	3		Outlot F
261	779	American Linden	12"	2	3		Outlot F
262	780	American Linden	10"	4	4		Outlot F
263	790	Ash	12"	5	5		Outlot F
264	791	Ash	10"	5	5		Outlot F
265	792	Ash	13"	5	5		Outlot F
266	793	Black Cherry	13"	5	5		Outlot F
267	794	Red Oak	14"	3	4	Lean	Outlot F
268	795	Red Oak	20"	3	3		Outlot F
269	796	Red Oak	12"	5	5		Outlot F
270	797	Red Oak	18"	3	3		Outlot F
271	798	Red Oak	12"	4	4	Lean	Outlot F
272	799	Ash	20"	5	5		Outlot F
273	800	Ash	15"	5	5		Outlot F
274	801	American Elm	10"	2	3		Outlot F
275	802	American Elm	10"	2	2		Outlot F
276	803	American Elm	14"	3	3		Outlot F
277	804	Red Oak	17"	2	2		Outlot F
278	805	Red Oak	21"	2	4	Sided back wires	Outlot F
279	806	Sassafras	13"	3	3		Outlot F
280	807	Sassafras	9"	3	3		Outlot F
281	808	Sassafras	10"	3	3		Outlot F
282	809	Sassafras	12"	3	3		Outlot F
283	810	Sassafras	9"	3	3		Outlot F
284	811	Red Oak	11"	3	3		Outlot F
285	812	Ash	10"	5	5		Outlot F

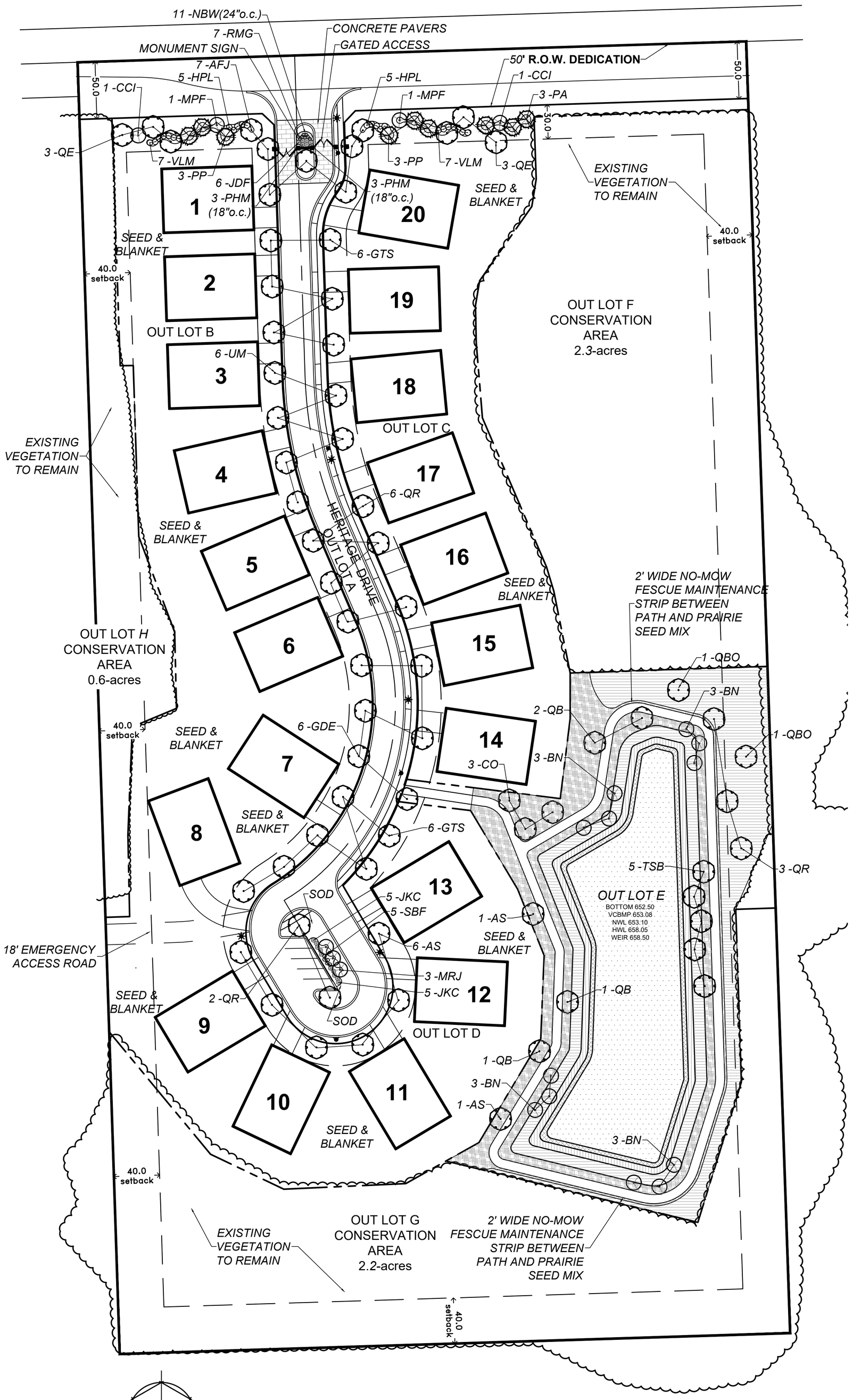

PLANT LIST

KEY	QTY	BOTANICAL NAME	COMMON NAME T	SIZE/ YPE
		DECIDUOUS SHADE TREES		
AFJ	12	Acer f 'Jeffersred'	Autumn Blaze Freeman Maple	2.5" BB
AS	8	Acer saccharum	Sugar Maple	2.5" BB
CO	3	Celtis occidentalis	Hackberry	2.5" BB
GTS	12	Gleditsia t.i.'Skyline'	Skyline Honeylocust	2.5" BB
GDE	6	Gymnocladus d. 'Espresso'	Espresso Kentucky Coffeetree	2.5" BB
QB	4	Quercus bicolor	Swamp White Oak	2.5" BB
QE	6	Quercus ellipdoidalis	Hills Oak	2.5" BB
QBO	2	Quercus macrocrapa	Burr Oak	2.5" BB
QR	11	Quercus rubra	Red Oak	2.5" BB
TSB	5	Taxodium d. 'Mickelson'	Shawnee Brave Bald Cypress	2.5" BB
UM	6	Ulmus 'Morton'	Accolade Elm	2.5" BB
		EVERGREEN TREES		
PA	3	Picea abies	Norway Spruce	8' BB
PP	6	Picea pungens	Colorado Green Spruce	8' BB
		DECIDUOUS ORNAMENTAL TREES		
BN	12	Betula n. 'Cully'	Heritage River Birch	8' BBcl.
CCI	2	Crataegus c. inermis	Thornless Cockspur Hawthorn	6' BBcl.
MRJ	3	Malus 'Red Jewel'	Red Jewel Crabapple	3.0" BB
MPF	2	Malus 'Prairie Fire'	Prairie Fire Crabapple	6' BBcl.
		DECIDUOUS SHRUBS & SHRUB ROSES		
HPL	10	Hydrangea p. 'Limelight'	Limelight Hydrangea	#5/30"
RMG	7	Rosa ' BAIgirl'	Easy Elegance My Girl	#3/18"
SBF	5	Spiraea b. 'Froebel'	Froebel Spirea	#5/24"
VLM	14	Viburnum l. 'Mohican'	Mohican Viburnum	3' BB
		EVERGREEN SHRUBS		
JDF	6	Juniperus c 'Daub's Frosted'	Daub's Frosted Juniper	24"/#5
JKC	10	Juniperus c. 'Kalley's'	Kalleys Compact Juniper	#5/24"
		ORNAMENTAL GRASSES & PERENNIALS		
PHM	6	Panicum v.'Heavy Metal'	Heavy Metal Switch Grass	#1
NBW	11	Nepeta r. 'Blue Wonder'	Blue Wonder Catmint	#1

MATERIAL & LABOR LIST:

QTY		ITEM DESCRIPTION	
2,870	SY	Native Seed w/ Straw Blanket	Emergent Wetland Seed Mix S75 by North American Green (or equal)
400	SY	Native Seed w/ Straw Blanket	Wetland Edge Seed Mix S75 by North American Green (or equal)
620	SY	Native Seed w/ Straw Blanket	Wet to Mesic Prairie Seed Mix S75 by North American Green (or equal)
2,945	SY	Native Seed w/ Straw Blanket	Economy Prairie Seed Mix S75 by North American Green (or equal)
2,135	SY	Native Seed w/ Straw Blanket	No-Mow Fescue Seed Mix S75 by North American Green (or equal)
TBD	SY	Seed w/ Straw Blanket	Kentucky Bluegrass Blend w/Perennial Rye S75 by North American Green (or equal)
70	SY	Sod (Island)	Kentucky Bluegrass Blend (mineral base)

GENERAL NOTES:

Plant material shall be nursery grown and be either balled and bur-lapped or container grown. Sizes and spreads on plant list represent minimum requirements.

The requirements for measurement, branching and ball size shall conform to the latest addition of ANSI Z60.1, AMERICAN STANDARD OF NURSERY STOCK by the American Nursery & Landscape Association.

Any materials with damaged or crooked/disfigured leaders, bark abrasion, sunscald, insect damage, etc. are not acceptable and will be rejected. Trees with multiple leaders will be rejected unless called for in the plant list as multi-stem or clump (cl.).

If any mistakes, omissions, or discrepancies are found to exist with the work product, the Landscape Architect shall be promptly notified so that they have the opportunity to take any steps necessary to resolve the issue. Failure to promptly notify the Landscape Architect and the Owner of such conditions shall absolve them from any responsibility for the consequences of such failure.

Under no circumstances should these plans be used for construction purposes without examining actual locations of utilities on site, and reviewing all related documents mentioned herein, including related documents prepared by the project Civil Engineer and Architect.

Civil Engineering or Architectural base information has been provided by others. The location of various site improvements on this set of drawings is only illustrative and should not be relied upon for construction purposes.

Quantity lists are supplied as a convenience. However, Bidders and the Installing Contractor should verify all quantities. The drawings shall take precedence over the lists. Any discrepancies shall be reported to the Landscape Architect.

Actions taken without the knowledge and consist of the Owner and the Landscape Architect or in contradiction to the Owner and the Landscape Architect's work product or recommendations, shall become the responsibility not of the Owner and the Landscape Architect, but for the parties responsible for the taking of such action.

Refer to Civil Engineering documents for detailed information regarding size, location, depth and type of utilities, as well as locations of other site improvements, other than landscape improvements,

Plant symbols illustrated on this plan are a graphic representation of proposed plant material types and are intended to provide for visual clarity. However, the symbols do not necessarily represent actual plant spread at the time of installation.

All plant species specified are subject to availability. Material shortages in the landscape industry may require substitutions. All substitutions must be approved by the Village, Landscape Architect and Owner.

The Landscape Contractor shall verify location of all underground utilities prior to digging by calling "J.U.L.I.E." (Joint Utility Location for Excavators) 1-800-892-0123 and any other public or private agency necessary for utility location.

All perennial, ornamental grass, groundcover and annual beds shall be top dressed with a minimum of three inches (3") of mushroom compost. The top dressing shall be worked into the soil to a minimum depth of nine inches (9") by the use of a cultivating mechanism. Upon completion perennials & ornamental grasses shall be mulched with an additional two inch (2") layer of shredded wood mulch; Annuals & groundcovers shall be covered with a two inch (2") layer of southern pine bark fines mulch.

All other planting beds and tree saucers shall be mulched with a minimum of three inches (3") of shredded wood mulch.

Planting beds adjacent to building shall be mulched in their entirety to the building foundation. Plant materials shall not be installed under building overhangs and other such areas which do not receive natural rainfall.

Mulch beds at the time of planting shall extend a minimum of two feet (2') beyond the center of a shrub.

All bed lines and tree saucers shall require a hand spaded edge between lawn and mulched areas.

Grading shall provide slopes which are smooth and continuous. Positive drainage shall be provided in all areas.

Sod shall be mineral base only.

Seed mixes shall be applied mechanically so that the seed is incorporated into the top one-half inch (1/2") of the seed bed. The seed shall then be covered with the specified blanket (installed per manufacturer's. specs) or Hydro-mulch.

All plant material shall be guaranteed for one (1) year from the date of acceptance.

LEGEND

- NO-MOW FESCUE SEED MIX
- ECONOMY PRAIRIE SEED MIX
- WET TO MESIC PRAIRIE SEED MIX
- WETLAND EDGE SEED MIX
- EMERGENT WETLAND SEED MIX

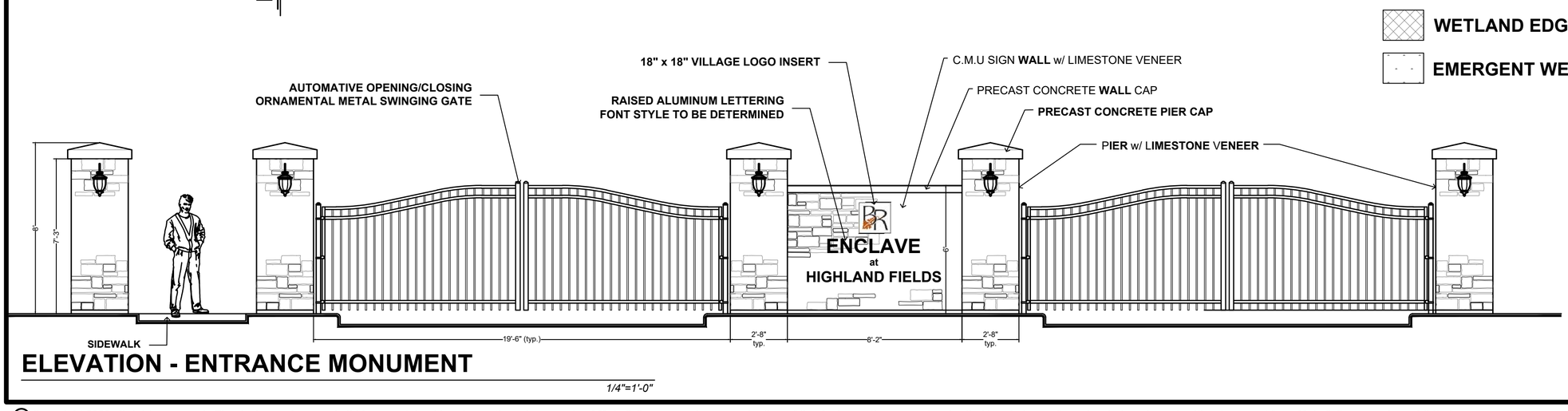

ELEVATION - ENTRANCE MONUMENT

1/4"=1'-0"

© Copyright 2020 all rights reserved. The design and any and all ideas contained herein are the sole property of Metz & Company. Any reproduction of the design or the concept embodied herein in any form, in whole or in part, without consent from Metz & Company is prohibited.

If this plan is not 24" x 36" in size, then it is a reproduction that may not be to scale

SHEET L-1.0

PROJECT NO.: 21-171
DATE: 10-20-2022
SCALE: 1"=50'

TITLE: LANDSCAPE PLAN

METZ & COMPANY
LANDSCAPE ARCHITECTURE/SITE PLANNING
826 East Maple Street
Lombard, Illinois 60148
PH: 630.561.3903
www.metz-company.com

SEAL: STATE OF ILLINOIS — RANDY F. METZ — no. 157-000422 — LANDSCAPE ARCHITECT

ENCLAVE OF HIGHLAND FIELDS

11731 W. 87th STREET
BURR RIDGE, ILLINOIS

REVISIONS

1	Alternative Site Plan	11-08-22
2	Village Review Comments	11-16-22

McNaughton DEVELOPMENT, LLC
YOUR LUXURY HOME BUILDER

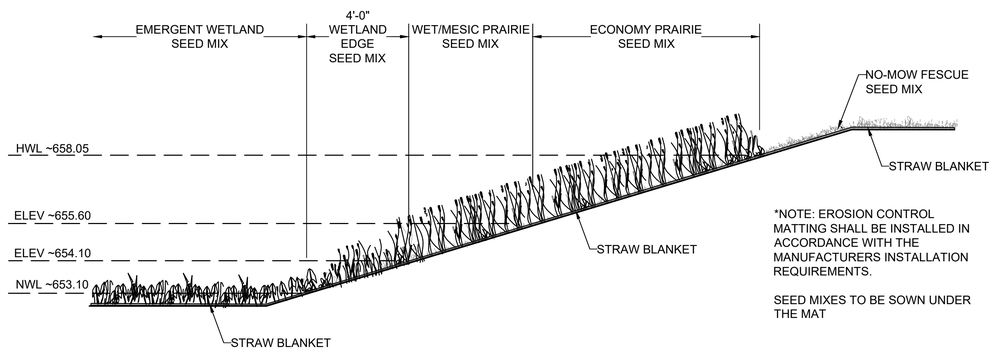

*NOTE: EROSION CONTROL MATTING SHALL BE INSTALLED IN ACCORDANCE WITH THE MANUFACTURERS INSTALLATION REQUIREMENTS.

SEED MIXES TO BE SOWN UNDER THE MAT

PROTOTYPICAL DETENTION BASIN SECTION

N.T.S

Economy Prairie Seed Mix
Apply @ 37.70 PLS pounds per acre

Botanical Name	Common Name	PLS Ounces/Acre
Permanent Grasses:		
Andropogon gerardii	Big Bluestem	12.00
Bouteloua curtipendula	Side-Oats Grama	16.00
Carex spp.	Prairie Sedge Species	3.00
Elymus canadensis	Canada Wild Rye	24.00
Panicum virgatum	Switch Grass	2.50
Schizachyrium scoparium	Little Bluestem	32.00
Sorghastrum nutans	Indian Grass	12.00
	Total	**101.50**
Temporary Cover:		
Avena sativa	Common Oat	360.00
	Total	**360.00**
Forbs:		
Asclepias syriaca	Common Milkweed	1.00
Asclepias tuberosa	Butterfly Weed	1.00
Chamaecrista fasciculata	Partridge Pea	10.00
Coreopsis lanceolata	Sand Coreopsis	6.00
Echinacea purpurea	Broad-Leaved Purple Coneflower	8.00
Heliopsis helianthoides	False Sunflower	0.25
Monarda fistulosa	Wild Bergamot	0.50
Penstemon digitalis	Foxglove Beard Tongue	1.00
Ratibida pinnata	Yellow Coneflower	4.00
Rudbeckia hirta	Black-Eyed Susan	8.00
Solidago speciosa	Showy Goldenrod	0.50
Symphyotrichum laeve	Smooth Blue Aster	1.00
Symphyotrichum novae-angliae	New England Aster	0.50
	Total	**41.75**

Emergent Wetland Seed Mix
Apply @ 34.38 PLS pounds per acre

Botanical Name	Common Name	PLS Ounces/Acre
Permanent Grasses/Sedges/Rushes:		
Bolboschoenus fluviatilis	River Bulrush	1.00
Carex comosa	Bristly Sedge	2.50
Carex lacustris	Common Lake Sedge	0.50
Carex lurida	Bottlebrush Sedge	4.00
Carex stricta	Common Tussock Sedge	1.00
Carex vulpinoidea	Brown Fox Sedge	2.00
Eleocharis palustris	Great Spike Rush	1.00
Juncus effusus	Common Rush	1.00
Leersia oryzoides	Rice Cut Grass	3.00
Schoenoplectus acutus	Hard-Stemmed Bulrush	2.50
Schoenoplectus pungens	Chairmaker's Rush	1.50
Schoenoplectus tabernaemontani	Great Bulrush	6.00
	Total	**26.00**
Temporary Cover:		
Avena sativa	Common Oat	512.00
	Total	**512.00**
Forbs:		
Acorus americanus	Sweet Flag	1.00
Alisma subcordatum	Common Water Plantain	2.00
Asclepias incarnata	Swamp Milkweed	1.00
Boehmeria cylindrica	False Nettle	1.00
Cephalanthus occidentalis	Buttonbush	6.00
Decodon verticillatus	Swamp Loosestrife	0.50
Eutrochium maculatum	Spotted Joe-Pye Weed	0.50
Hibiscus spp.	Rose Mallow Species	4.00
Iris virginica v. shrevei	Blue Flag	6.00
Lobelia cardinalis	Cardinal Flower	0.25
Lobelia siphilitica	Great Blue Lobelia	0.25
Lycopus americanus	Common Water Horehound	1.00
Mimulus ringens	Monkey Flower	1.00
Peltandra virginica	Arrow Arum	16.00
Penthorum sedoides	Ditch Stonecrop	0.50
Persicaria spp.	Pinkweed Species	2.00
Pontederia cordata	Pickerel Weed	4.00
Sagittaria latifolia	Common Arrowhead	2.00
Sparganium eurycarpum	Common Bur Reed	6.00
Verbena hastata	Blue Vervain	1.00
	Total	**56.00**

Wet-to-Mesic Prairie Seed Mix
Apply @ 36.19 PLS pounds per acre

Botanical Name	Common Name	PLS Ounces/Acre
Permanent Grasses:		
Andropogon gerardii	Big Bluestem	16.00
Calamagrostis canadensis	Bluejoint Grass	1.00
Carex lurida	Bottlebrush Sedge	3.00
Carex stricta	Common Tussock Sedge	1.00
Carex vulpinoidea	Brown Fox Sedge	1.00
Elymus virginicus	Virginia Wild Rye	24.00
Juncus canadensis	Canadian Rush	0.50
Panicum virgatum	Switch Grass	2.00
Scirpus cyperinus	Wool Grass	0.50
Sorghastrum nutans	Indian Grass	8.00
Spartina pectinata	Prairie Cord Grass	3.00
	Total	**60.00**
Temporary Cover:		
Avena sativa	Common Oat	512.00
	Total	**512.00**
Forbs:		
Asclepias syriaca	Common Milkweed	2.00
Baptisia alba	White Wild Indigo	1.00
Chamaecrista fasciculata	Partridge Pea	10.00
Coreopsis lanceolata	Sand Coreopsis	4.00
Coreopsis tripteris	Tall Coreopsis	2.00
Desmodium illinoense	Illinois Tick Trefoil	0.50
Doellingeria umbellata	Flat-Top Aster	0.50
Echinacea purpurea	Broad-Leaved Purple Coneflower	4.00
Eryngium yuccifolium	Rattlesnake Master	2.00
Helenium autumnale	Sneezeweed	2.00
Helianthus grosseserratus	Sawtooth Sunflower	0.50
Lespedeza capitata	Round-Headed Bush Clover	1.50
Liatris spicata	Marsh Blazing Star	1.00
Monarda fistulosa	Wild Bergamot	1.00
Oligoneuron rigidum	Stiff Goldenrod	1.00
Parthenium integrifolium	Wild Quinine	1.00
Physostegia virginiana	Obedient Plant	0.25
Pycnanthemum virginianum	Common Mountain Mint	0.50
Ratibida pinnata	Yellow Coneflower	4.00
Rudbeckia hirta	Black-Eyed Susan	4.00
Rudbeckia laciniata	Wild Golden Glow	1.00
Rudbeckia subtomentosa	Sweet Black-Eyed Susan	0.50
Senna hebecarpa	Wild Senna	2.25
Silphium integrifolium	Rosin Weed	1.00
Silphium laciniatum	Compass Plant	2.00
Silphium perfoliatum	Cup Plant	2.00
Silphium terebinthinaceum	Prairie Dock	3.00
Solidago juncea	Early Goldenrod	0.25
Solidago rugosa	Rough Goldenrod	0.25
Symphyotrichum novae-angliae	New England Aster	0.50
Tradescantia ohiensis	Common Spiderwort	1.25
Vernonia fasciculata	Common Ironweed	3.00
Veronicastrum virginicum	Culver's Root	0.25
Zizia aurea	Golden Alexanders	1.00
	Total	**61.00**

Wetland Edge Seed Mix
Apply @ 33.00 PLS pounds per acre

Botanical Name	Common Name	PLS Ounces/Acre
Permanent Grasses/Sedges:		
Bolboschoenus fluviatilis	River Bulrush	2.00
Carex comosa	Bristly Sedge	1.50
Carex cristatella	Crested Oval Sedge	0.50
Carex frankii	Bristly Cattail Sedge	4.00
Carex stricta	Common Tussock Sedge	0.50
Carex vulpinoidea	Brown Fox Sedge	2.00
Eleocharis palustris	Great Spike Rush	0.50
Elymus virginicus	Virginia Wild Rye	16.00
Glyceria striata	Fowl Manna Grass	1.00
Juncus effusus	Common Rush	0.50
Leersia oryzoides	Rice Cut Grass	0.50
Schoenoplectus pungens	Chairmaker's Rush	1.00
Schoenoplectus tabernaemontani	Great Bulrush	2.50
Scirpus atrovirens	Dark Green Rush	1.00
Scirpus cyperinus	Wool Grass	0.50
	Total	**34.00**
Temporary Cover:		
Avena sativa	Common Oat	512.00
	Total	**512.00**
Forbs:		
Acorus americanus	Sweet Flag	1.00
Alisma subcordatum	Common Water Plantain	2.00
Asclepias incarnata	Swamp Milkweed	2.00
Bidens spp.	Bidens Species	2.00
Boehmeria cylindrica	False Nettle	1.00
Doellingeria umbellata	Flat-Top Aster	0.25
Eupatorium perfoliatum	Common Boneset	1.00
Helenium autumnale	Sneezeweed	1.00
Iris virginica v. shrevei	Blue Flag	4.00
Lobelia cardinalis	Cardinal Flower	0.25
Lobelia siphilitica	Great Blue Lobelia	0.25
Lycopus americanus	Common Water Horehound	0.25
Mimulus ringens	Monkey Flower	0.50
Penthorum sedoides	Ditch Stonecrop	0.50
Persicaria spp.	Pinkweed Species	2.00
Rudbeckia laciniata	Wild Golden Glow	1.00
Sagittaria latifolia	Common Arrowhead	2.00
Senna hebecarpa	Wild Senna	2.00
Sparganium eurycarpum	Common Bur Reed	4.00
Symphyotrichum puniceum	Bristly Aster	1.00
Thalictrum dasycarpum	Purple Meadow Rue	0.50
Verbena hastata	Blue Vervain	1.50
Verbesina alternifolia	Wingstem	2.00
Vernonia fasciculata	Common Ironweed	2.00
	Total	**34.00**

NO MOW FESCUE SEED MIX
Prairie Nursery Westfield, WI

COMMON NAME	PERCENT	GERMINATION
SR5100 Chewings Fescue	23.52%	85%
Sheep Fescue	23.52%	85%
Dawson Red Fescue	11.76%	85%
SR100 Hard Fescue	11.76%	85%
Scaidis Hard Fescue	11.76%	85%
Creeping Red Fescue	11.70%	85%
Annual Ryegrass	3.88%	90%

Seed Rate 5 lbs per 100 sq. ft. or 220 lbs per acre

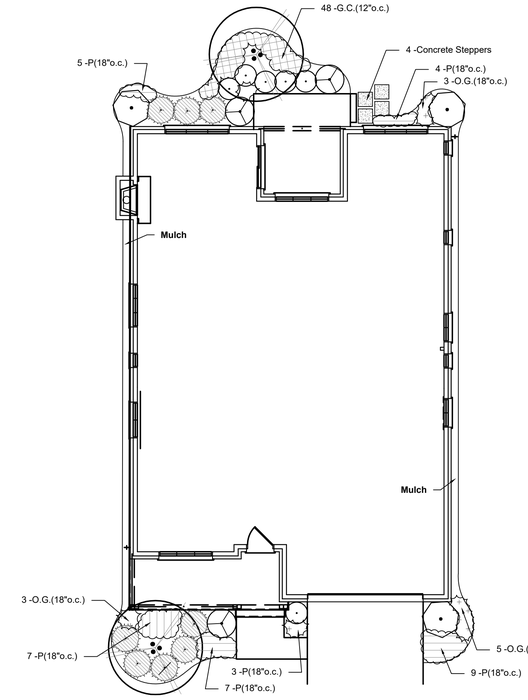

PROTOTYPICAL FOUNDATION PLANTING PLAN

1"=10'

PLANT LIST - FOUNDATION PLANTINGS

The following is a general listing of quality plant material from which final plant species assignments shall be selected by the Contractor.

NOTE: No less than five (5) percent or no more than twenty-five (25) percent of the total foundation plantings shall be of one (1) dividual species.

SUN EXPOSURE



SIZE 6' B/B

ORNAMENTAL TREE

- Amelanchier canadensis — Shadblow Serviceberry
- Betula p. 'Royal Frost' — Royal Frost Birch
- Crataegus c. 'Inermis' — Thornless Cockspur Hawthorn
- Magnolia x 'Jane' — Jane Magnolia
- Magnolia s. 'Royal Star' — Royal Star Magnolia
- Malus 'Red Jewel' — Red Jewel Crabapple
- Syringa r. 'Ivory Silk' — Ivory Silk Tree Lilac
- Viburnum prunifolium — Blackhaw Viburnum



30"

LARGE DECIDUOUS SHRUBS

- Cornus s. 'Isanti' — Redosier Dogwood
- Cotoneaster acutifolia — Peking Cotoneaster
- Fothergilla m. 'Mount Airy' — Mount Airy Fothergilla
- Hydrangea a. 'Abetwo' — Incrediball Hydrangea
- Hydrangea p. 'Bulk' — Quick Fire Hydrangea
- Hydrangea p. 'Renhy' — Vanilla Strawberry Hydrangea
- Hydrangea q. 'Brenhill' — Gatsby Gal Oakleaf Hydrangea
- Physocarpus o. 'Seward' — Summer Wine Ninebark
- Syringa p.'Miss Kim' — Miss Kim Dwarf Lilac
- Viburnum d. 'Christom' — Blue Muffin Viburnum
- Viburnum x juddii — Judd Viburnum
- Viburnum cayuga — Cayuga Viburnum
- Weigela f. 'Verweig 6' — Sonic Bloom Red Weigela

DWARF DECIDUOUS SHRUBS & SHRUB ROSES

- Cotoneaster apiculata — Cranberry Cotoneaster
- Fothergilla gardenii — Dwarf Fothergilla
- Diervilla 'G2X885411' — Kodiak Red Bush-honeysuckle
- Diervilla s. 'Butterfly' — Southern Bush-honeysuckle
- Hydrangea m. 'Bailmer' — Endless Summer Hydrangea
- Hydrangea p. 'ILVOBO' — Bobo Hydrangea
- Hypericum kalmianum — Kalm St. John's Wort
- Rhus a.'Gro-Low' — Gro-Low Sumac
- Ribes a.'Green Mound' — Green Mound Alpine Currant
- Rosa 'Radsun' — Carefree Sunshine Rose
- Rosa 'BAImir' — Kashmir Easy Elegance Rose
- Rosa 'Radtko' — Double Knock Out Red Rose
- Rosa 'Radthopink' — Double Knock Out Pink Rose
- Rosa r. 'Frau Dagmar Hastrup' — Frau Dagmar Hastrup Rugosa Rose
- Rosa r. JACruwhi' — Wild Spice Rugosa Rose
- Spiraea b 'Tor' — Birchleaf Spirea
- Spiraea x b.'Froebeli' — Froebel's Spirea
- Spiraea x b.'Gold Flame' — Gold Flame Spirea
- Weigela x 'Dark Horse' — Dark Horse Weigela



18"/#3

EVERGREEN/BROADLEAF SHRUBS



18"

- Euonymus f.'Emerald Gaiety' — Emerald Gaiety Euonymus
- Euonymus f. 'Sarcoxie' — Sarcoxie Euonymus
- Juniperus c.'Gold Lace' — Gold Lace Juniper
- Juniperus c. 'Kallay's Compact' — Kally's Compact Juniper
- Taxus m. 'Densiformis' — Dense Yew

ORNAMENTAL GRASSES

PLANT TYPE 'OG'



#1 Cont.

- Calamagrostis a. 'Karl Foerster' — Feather Reed Grass
- Deschampsia c. 'Pixie Fountain' — Pixie Fountain Tufted Hair Grass
- Hakonechloa marcra species — Japanese Forest Grass
- Panicum v. 'Cheyenne Sky' — Cheyenne Sky Switchgrass
- Schizachyrium s. 'Carousel' — Carousel Little Bluestem
- Sporobolus heterolepis — Prairie Dropseed

PERENNALS

PLANT TYPE 'P'



#1 Cont.

- Achillea millefolium sp. — Yarrow
- Astilbe chinensis sp — Astilbe
- Coreopsis v. 'Moonbeam' — Moonbeam Coreopsis
- Echinacea sp. — Coneflower
- Geranium 'Gerwat' — Rozanne Geranium
- Geranium s. 'Max Frei' — Max Frei Bloody Cranesbill
- Hemerocallis sp. — Daylily
- Heuchera a. 'Dale's Strain' — Dale's Strain Coralbells
- Heuchera 'Georgia Peach' — Georgia Peach Alumroot
- Heuchera 'Purple Petticoats' — Purple Petticoats Coralbells
- Hosta 'Francee' — Francee Hosta
- Hosta 'Halcyon' — Halcyon Hosta
- Hosta 'Loyalist' — Loyalist Hosta
- Hosta 'Patriot' — Patriot Hosta
- Nepeta r. 'Walker's Low' — Walker's Low Catmint
- Rudbeckia f. 'Viette's Little Suzy' — Little Suzy Black-eyed Susan
- Sedum s. 'Autumn Joy' — Autumn Joy Sedum

GROUNDCOVERS

PLANT TYPE 'GC'



10 or 24 flat

- Ajuga r. 'Bronze Beauty' — Bronze Beauty Bugleweed
- Geranium x c. 'Biokovo' — Biokova Geranium
- Pachysandra t. Green Carpet' — Japanese Spurge
- Ruellia humilis — Wild Petunia
- Sedum h. 'Immergrunchen' — Little Evergreen Stonecrop
- Sedum kamtschaticum — Russian Stonecrop
- Vinca minor — Periwinkle

REVISIONS

2	Village Review Comments	11-16-22
1	Alternative Site Plan	11-08-22

ENCLAVE OF HIGHLAND FIELDS

11731 W. 87th STREET
BURR RIDGE, ILLINOIS

SEAL:

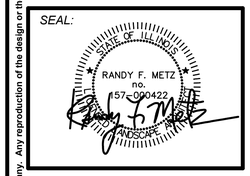

METZ & COMPANY
LANDSCAPE ARCHITECTURE/SITE PLANNING
826 East Maple Street
Lombard, Illinois 60148
PH: 630.561.3903
www.metz-company.com

TITLE

LANDSCAPE PLAN

PROJECT NO.: 21-171

DATE: 10-20-2022

SCALE: 1"=50'

SHEET

L-2.0

If this plan is not 24" x 36" in size, then it is a reproduction that may not be to scale. Any reproduction of the design or the concept embodied herein in any form, in whole or in part, without consent from Metz & Company is prohibited.

© Copyright 2020 all rights reserved. The design and any and all ideas contained herein are the sole property of Metz & Company.

PLANT MATERIAL

PART 1 - GENERAL

1.1 SCOPE OF WORK

The work includes furnishing of all materials, and the performance of all operation in connection with the planting of deciduous & evergreen trees, deciduous & evergreen shrubs, shrub roses, perennials, ornamental grasses, groundcover, bulbs (if any) and annual flowers (if any) in strict conformance with the project specifications and applicable drawings which are subject to the terms and conditions of the Contract.

1.2 GENERAL REQUIREMENTS

All plant material shall comply with the State of ILLINOIS and FEDERAL laws with respect to inspection for plant diseases and insect infestation. An inspection certificate required by law to this effect shall accompany each shipment. The Landscape Architect reserves the right to inspect the plant material at the place of growth but such inspection shall not preclude the right of rejection at the site.

1.3 APPLICABLE STANDARDS

A. *American National Standards for Tree Care Operations*, ANSI A300, American National Standards Institute, 11 West 42nd Street, New York, N.Y. 10036.
B. *American Standard for Nursery Stock*, ANSI Z60.1, American Nursery & Landscape Association, 1000 Vermont Avenue NW, Suite 300, Washington, D.C. 20005.
C. *Hortus Third*, The Staff of the L.J. Bailey Hortorium, 1976, MacMillan Publishing Co., New York.
D. All standards shall include the latest additions and amendments as of the dated of advertisement for bids.

PART 2 - MATERIALS

2.1 GENERAL
The Landscape Architect reserves the right to tag or inspect plants at the nursery but such inspection shall not preclude the right of rejection at the site. Contractor shall furnish and install all plants as shown on the drawing and in the quantities as actually designated on the drawings. The quantities shown on the plant list are included for convenience purposes only.

2.2 NOMENCLATURE
The names of the plants indicated on the drawings conform generally with those accepted in the nursery trade.

2.3 QUALITY AND SIZE
Plants shall have a habit of growth that is normal for the species and shall be sound, healthy, vigorous, and free from insect pests, their eggs or larvae, plant diseases, and injuries. All plants shall be nursery grown under climatic conditions similar to those which exist in the locality of the site for at least two (2) years and equal or exceed the measurements specified in the plant list. They shall be measured before pruning with branches in formal position. All necessary pruning shall be performed only at the time of planting. Trees will not be accepted which have their leaders cut or which have their leaders damaged so that cutting is necessary. Plants larger in size than specified may be used with the approval of the Landscape Architect but the use of larger plants will make no change in the contract price. Requirements for the measurement, branching, quality, balling, and burlapping of plants on the plant list shall follow the Code of Standards (Z60.1-most current edition) by the AMERICAN NURSERY & LANDSCAPE ASSOCIATION, formerly known as the AMERICAN ASSOCIATION OF NURSERYMEN, INC. All plant material with shriveled dry roots or which does not comply with the specifications will be rejected. All shrubs shall be at least twice transplanted and must have a fully developed fibrous root system typical of the stated species. All shrubs must be freshly dug immediately before shipping unless they are containerized. Pre-dug, healed-in plants may be considered only in special cases involving planting during the hot months between the spring and fall planting seasons. Use of such material will be allowed only upon the approval of the Landscape Architect and is subject to his inspection prior to said approval.

2.4 DELIVERIES
The Contractor shall take all precautions that are demanded by good trade practice to insure arrival of the plant material at the stated delivery point in good condition and without injury of any nature. Plants shall be covered properly to prevent drying, transit disease, or injury.

2.5 TEMPORARY STORAGE
Insofar as it is possible, plant material shall be planted on the day of delivery. In the event this is not possible, the Contractor shall protect the unplanted stock from sun and drying winds at all times. All balled and burlapped plants shall be shaded from the sun, have their ball set off the ground and healed in with sawdust, peat, soil or other moisture-holding material and shall be kept moist. Plants should not remain unplanted for longer than three (3) days if in leaf. On-site storage shall be only in area(s) designated by the Owner.

2.6 SUBSTITUTIONS
Substitutions may be permitted only upon submission of written proof that the specified plant is not obtainable locally. Such substitution may be made only upon authorization by the Landscape Architect.

2.7 SELECTION
All plants shall be obtained from nurseries licensed by the State of Illinois and approved by the Landscape Architect. The Landscape Architect reserves the right to accompany the Contractor to the nurseries for the purpose of selecting (tagging) material. Plant sources located outside the State of Illinois must be approved by the Landscape Architect.

2.8 TOPSOIL
Topsoil if needed shall be imported. All imported topsoil, used for any portion of the work, shall be fertile, friable, natural loam containing a liberal amount of humus. It shall be relatively free from weeds, large roots, plants, sticks, stones larger than one (1) inch, waste, debris or other extraneous matter. The installing Contractor shall be responsible for rock picking and/or debris removal as needed to meet this specification.

The soil, to be acceptable topsoil, shall meet the following criteria:
A. ORGANIC MATTER: Not less than 1.5 percent no more than 10.0 percent.
B. pH: No lower than 5.0 nor higher than 8.0.
C. TEXTURE: No more than 25 percent clay.
D. SOLUBLE SALT: No more than 1000 ppm
E. CHEMICAL ACTIVITY: The topsoil (on-site & imported) shall be free from any toxins or chemical residue which could result in any form of plant growth damage.

The Contractor shall provide a soil analysis report submittal containing test results and soil scientist recommendations based on a minimum of one (1) sample taken from each proposed imported topsoil stock pile. The testing shall cover macro nutrients and pH, soluble salts, organic content/mechanical analysis and Bio assay.

2.9 MULCH
Mulch shall consist of the following:

A. MUSHROOM COMPOST
Mushroom compost shall be composed of well-rotted cattle or stable manure with an admixture of 15-30% topsoil and shall have been used for the commercial growing of at least one (1) crop of mushrooms.
B. SHREDDED HARDWOOD BARK (general mulching)
Shredded hardwood bark shall consist of finely shredded hardwood bark, free of sticks and leaves.

2.10 FERTILIZER & NUTRIENTS

Fertilizer shall be commercial fertilizer which shall be a complete fertilizer with the following approximate analysis:

A. Shrubs
Woodace (14-3-3) slow-release briquettes or acceptable equivalent approved by Landscape Architect.
B. Roses
1. Woodace (14-3-3) slow-release briquettes
2. Superthrive liquid or acceptable equivalent approved by Landscape Architect.
C. Perennials, Groundcover, Ornamental Grasses & Vines
Osmocote (18-6-12) 8-9 month controlled release, or acceptable equivalent approved by the Landscape Architect.
D. Annual Flowers
Osmocote (14-14-14) 3-4 month controlled release or acceptable equivalent approved by the Landscape Architect.
E. Bulbs
Holland Bulb Booster (9-9-6) or acceptable equivalent approved by the Landscape Architect.
F. Deciduous & Evergreen Trees
No fertilizer required

2.11 TREE WRAPPING MATERIAL

A. Wrap shall be - Breathable synthetic fabric tree wrap. White in color, delivered in 75 mm (3 in.) wide rolls. Specifically manufactured for tree wrapping. Tree wrap shall be "Breathable Fabric Tree Wrap" as manufactured by the Dewitt Company, Inc., Sikeston, MO, or approved equal. Submit manufacture literature for approval.
B. Tape for securing the wrap shall be bio-degradable tape suitable for nursery use and which is expected to degrade in sunlight in less than two (2) years after installation.

2.12 WATER

Potable water shall be supplied by the Owner at no cost to the Contractor by way of an irrigation system, quick coupler system, hose bibs, hydrant meter or a designated fill-up source on site.

PART 3 - EXECUTION

Planting operations shall be conducted under favorable weather conditions during the season stated in the Contract. Before excavations are made the surrounding turf (if existing) shall be covered in a manner that will satisfactorily protect all turf areas that are to be trucked or hauled over and upon which soil is to temporarily stocked. The Contractor shall be responsible for the restoration of all damaged existing turf. All restoration shall be sodded.

3.1 TIME SCHEDULE OF PLANTING OPERATION

Landscaping shall be performed during the season or seasons which are normal for such work as determined by weather conditions and by accepted practice. Planting may be performed under unseasonable conditions without additional compensation, but such work must have the prior approval of the Landscape Architect and/or Owner in writing as to the time of work and methods of operations. Approval to plant under such conditions shall in no way relieve the Contractor form the guarantee provisions of these specifications.

PLANTING SEASON	ACCEPTABLE TIME PERIOD
1. SPRING	a. From time soil is workable to June 15 with the following exception:
1) Bare root materials (if any) shall cease on May 31	
2. FALL	a. Sept. 1 to Nov. 15 with following exceptions:
1) Evergreen Shrub planting to cease Oct. 31	
2) Evergreen Tree planting to cease Oct. 15	
3) Perennial & Ornamental Grass planting to cease Oct. 15	

3.2 WATERING

All plants shall receive a thorough watering immediately after installation. During times of extreme heat, all evergreen and deciduous trees shall receive a minimum of 10 gallons of water per tree per watering up to two (2) additional waterings shall be performed as needed. The use of drip irrigation tree bags are encouraged (e.g., gatorbags). All additional waterings will be performed by the Owner or in accordance with a Change Order per the Supplemental Bid prices for additional watering.

3.3 MAINTENANCE
Maintenance shall be performed by the Contractor as follows:

A. TEMPORARY MAINTENANCE
The Contractor shall be responsible for the total maintenance of all plant material until such a date as all landscape operations have received Preliminary Acceptance. Temporary maintenance shall begin immediately after each plant is installed and shall include up to three (3) waterings, and all necessary cultivation, weeding, pruning, disease and insect pest control, protective spraying, resetting of plants to proper grades or upright position, restoration of damaged planting saucers, and any other procedure consistence with good horticultural practice necessary to insure normal, vigorous, and healthy growth of all work under this Contract. Upon the Preliminary Acceptance of all planted areas, the responsibility for plant maintenance rests solely with the Owner, with the following exceptions.

B. CONTINUED MAINTENANCE
For the duration of the guarantee period the Contractor shall be responsible for the resetting of settled plants, the straightening of plants which are not plumb and the tightening of tree guys (if utilized). All other maintenance is the responsibility of the Owner. However, it is the Contractor's responsibility to occasionally inspect the quality of the Owner's maintenance.

3.4 ACCEPTANCE

A. PRELIMINARY PLANTING ACCEPTANCE
Preliminary planting acceptance shall be given for completed planting operations for the purpose of the Contractor becoming eligible for payment for this portion of the Contract work. In order to obtain Preliminary Acceptance, the Contractor shall notify the Owner and/or Owner's Representative by phone or in writing at the conclusion of all planting operations so that preliminary acceptability by way of a field inspection can be performed. In order for an area to be accepted on a preliminary basis, it shall conform to the following:
1. All plant material shall be in conformance with the Drawings with respect to quality, size, species and location, except those items accepted or revised in the field by the Landscape Architect.
2. All plant material shall be in a healthy condition, as defined under the guarantee requirements stated below in Section 3.14

B. FINAL PLANTING ACCEPTANCE
Final planting acceptance shall be granted after the completion of all replacement operations required fulfilling the guarantee stated below.
On or about the expiration of the one-year (1 year) guarantee, a follow-up inspection will be made by the Owners and/or Owner's Representative to determine replacements required to be made by the Contractor in accordance with the provisions of these specifications. The inspector will document his/her findings in a field report. Upon completion of the replacement program, the Owner and/or Owner's Representative shall conduct an inspection to determine the acceptability of the required replacements. If all is found to be acceptable as defined by Item A above, the Contractor and the General Contractor shall be notified in writing of his final acceptance of work.

3.5 GUARANTEE
The Contractor shall guarantee for a period of one (1) year the replacement of any permanent plant which has died, or is in a dying condition, or which has failed to flourish in such a manner that its usefulness or appearance has been impaired. Any tree with a dead main leader or with a crown which is twenty-five percent (25%) or more dead shall be replaced.
These guarantees shall be in accordance with the following:

A. ONE YEAR PERIOD
The one (1) year period shall begin on the date of Preliminary Acceptance of all plant material.
B. REPLACEMENTS & DAMAGES
The decisions of the Owner and/or Owner's Representative for required replacements shall be conclusive and binding upon the Contractor. The Contractor shall also be responsible for repairing damage to persons and property also caused by defective workmanship and materials.
C. EXCLUSIONS
The Contractor shall not be liable for the replacement of plants which were damaged by animals, by deicing compounds, fertilizers, pesticides or other materials not specified by the Contract documents or not applied by him under his supervision, by relocating or removal by others, by Acts of God, by vandalism or by terrorism.
D. GUARANTEE PERIOD INSPECTION
During the guarantee period, the Contractor shall, from time to time, inspect the watering, cultivation, and other maintenance operations carried on by the Owner with respect to such work, and promptly report to the Owner any methods, practices or operations which he considers unsatisfactory, and not in accord with his interests or good horticultural practices. The failure of the Contractor to so inspect or report shall be construed as an acceptance by him of the Owner's maintenance operations, and he shall not thereafter claim or assert that any defects which may later develop are the result of such methods or practices or operations.

TURF GRASS

PART 1 - GENERAL

1.1 SCOPE OF WORK

The work includes finish grading, furnishing fertilizer, seed and/or sod as specified and performance of all operations in connection with seeding and/or sodding in strict accordance with the applicable Drawings and subject to the terms and conditions of the Contract.

1.2 EQUIPMENT

The Contractor shall provide and maintain equipment suitable for the execution and completion of the work specified in accordance with (IDOT) Standard Specifications. All equipment shall be operated by personnel trained in the operation of such equipment.

PART 2 - PRODUCTS

2.1 TOPSOIL

Topsoil for planting operations shall be obtained from an on-site stockpile generated from site stripping. In the event that none is available, needed topsoil shall be imported from an off-site source. All imported topsoil, used for any portion of the work, shall be fertile, friable, natural loam containing a liberal amount of humus. It shall be relatively free from weeds, large roots, plants, sticks, stones larger than one (1) inch, waste, debris or other extraneous matter. The installing Contractor shall be responsible for rock picking and/or debris removal as needed to meet this specification.

The soil, to be acceptable topsoil, shall meet the following criteria:

1. ORGANIC MATTER: Not less than 1.5 percent no more than 10.0 percent.
2. pH: No lower than 5.0 nor higher than 8.0.
3. TEXTURE: No more than 25 percent clay.
4. SOLUBLE SALT: No more than 1000 ppm.
5. CHEMICAL ACTIVITY: The topsoil (on-site & imported) shall be free from any toxins or chemical residue which could result in any form of plant growth damage.

The Contractor shall provide a soil analysis report submittal containing test results and soil scientist recommendations based on a minimum of one (1) sample taken from each proposed imported topsoil stock pile. The testing shall cover macro nutrients and pH, soluble salts, organic content/mechanical analysis and Bio assay.

2.2 COMMERCIAL FERTILIZER AND DELIVERY

Fertilizer shall be delivered to the site in unopened, original containers, each bearing name and address of the manufacturer, name brand, or trademark, and manufacturer's guaranteed analysis. Any fertilizer which becomes caked or otherwise damaged, making it unsuitable to use, will not be accepted. Fertilizer shall not have been exposed to weather prior to delivery on the site and after delivery until used. It shall be completely protected at all times and shall not be stored in direct contact with the ground.

A. FERTILIZER STRENGTH
The fertilizer shall be a complete fertilizer containing a minimum basis percentage by weight of the following:
1. PRIOR TO SEEDING AND/OR SODDING 6-24-24
Nitrogen..... 6%
Phosphorous..... 24%
Potash..... 24%

2. AFTER SEEDING AND/OR SODDING 18-5-9
Nitrogen..... 18%
Phosphorous..... 5%
Potash..... 9%

a) One-quarter of the nitrogen shall be in the form of nitrates, one-quarter in the form of ammonia salts, and one-half in the form of organic nitrogen.
b) Available phosphoric acid shall be derived from super-phosphate having a minimum guaranteed analysis of 20% of available phosphate.
c) The potash shall be in the form of sulphate of potash.

The balance of the fertilizer shall be made up of materials usually present in such a product. It shall be free from dust, sticks, sand, stone, or other debris.

2.3 GRASS SEED (if specified)
Grass seed shall be reclaimed seed of the previous season's seed crops. All seed shall meet requirements established by the State and Federal Seed and Weed Controls Laws. The grass seed mixture shall be composed of the following grass seeds mixed in proportions by weight and shall meet or exceed the minimum percentages of purity and germination as indicated.

PROPORTION BY WEIGHT	TYPE OF GRASS
1. CONVENTIONAL TURF GRASS MIX (if specified)	
60%	KENTUCKY BLUEGRASS (blend of 3 cultivars)
30%	PERENNIAL RYEGRASS (blend of 2 cultivars)
10%	CREEPING RED FESCUE
(Apply at 7 lbs./1,000 S.F. for mechanical seeding)	
2. SALT TOLERANT MIX (if specified)	
40%	'FULTS' ALKALI GRASS (PUCCINELLIA DISTANS)
30%	CREEPING RED FESCUE
20%	KENTUCKY BLUEGRASS
10%	PERENNIAL RYEGRASS
(Apply at 5 lbs./1,000 S.F. for mechanical seeding)	

The percentage of hard seed included as a part of the germination percentage of any lot of seed, shall not exceed twenty. Kentucky bluegrass seed shall weigh a minimum of 28 pounds to the nearest measured bushel. Weed seed content shall not exceed 0.25%.

1. PACKING AND MARKETING

All seeds shall be delivered in suitable bags in accordance with standard commercial practice. Each bag shall be tagged or labeled as required by the law of the STATE OF ILLINOIS. The vendor's name shall show on or be attached to each bag together with a statement signed by the vendor showing: a) the kind of seed contained, b) the percentage of purity and germination, c) the percentage of hard seed, if any, d) a statement conforming to the laws of the STATE OF ILLINOIS hereinbefore mentioned showing percentage of weed seeds, if any. Seed which has become wet, moldy, or otherwise damaged will be rejected.

2.4 EROSION CONTROL BLANKET

1. STRAW BLANKET (if specified)
a. S-75 Straw Blanket (North American Green)
b. AEC Premier Straw Blanket (American Excelsior Company)
c. or equivalent

2. STRAW/COCONUT BLANKET (if specified)
a. SC-150 Straw/Cocnut Blanket (North American Green)
b. AEC Premier Straw/Coconut Blanket (American Excelsior Company)
c. or equivalent

2.5 HYDROMULCH (if specified)
SoilCover Hydraulic Wood Mulch by Profile distributed by ERO-TEX (866)437-6839

2.6 SOD (if specified)
Sod shall comply with State and Federal laws with respect to inspection for plant diseases and insect infestation. It shall be fresh cut, live, nursery grown sod, not less than one and one half (1 1/2) inches thick having well-matted roots. The root zone shall be of good, fertile, natural mineral soil free from stones and debris. Peat sod will not be acceptable. The turf shall contain no bent or quack grass nor any other noxious weed growth. It shall be of firm tough texture having a compact growth of grass. The sod sections shall be standard in size (24 inches wide x 3 feet in length) and each section shall be strong enough to support its own weight and retain its size and shape when suspended vertically from a firm grasp on the upper ten (10%) percent of the section.

Before being cut and lifted, the sod shall have been mowed at least twice with a lawn mower and the final mowing not more than seven days before the sod is cut. Sod which is not placed within 48 hours of cutting shall not be used without the approval of the Owner and/or Landscape Architect.

The Owner and/or Landscape Architect, reserves the right to inspect the sod at the source before cutting and areas that fail to meet with his approval shall not be cut for the purpose of supplying material under the contract. The Owner and/or Landscape Architect shall be permitted to take such samples as he may select. All sod shall be fresh and green when placed. Any sod that is dried out, burned, inferior in quality to said samples, or in any way failing to meet the requirements of these specifications will be rejected and the Contractor shall immediately remove such rejected material from the premises of the project and supply suitable material in its place.

1. **BLUEGRASS SOD shall be a blend of at least three (3) cultivars of Kentucky bluegrass grown on a mineral base.**

2. **SALT SOD (if specified) shall be a blend of Kentucky Bluegrass, 'Fults' Alkalie Grass (Puccinellia Distans), Perennial Ryegrass and other types as approved by the Landscape Architect grown on a mineral base.**

2.7 WATER

The Owner shall provide at no cost, sufficient water for the Contractor to maintain plant materials and seeded and sodded areas in accordance with the requirements of the applicable technical specifications. Potable water shall be supplied by the Owner by way of a permanent underground irrigation system, quick coupler system, hose bibs, fire hydrants or a designated fill-up source for mobile tanks. When water is provided by way of fire hydrants, it shall be the Contractor's responsibility to be completely familiar with all local ordinances concerning the use of this water source. If a meter is required, it is the Contractor's responsibility to obtain, store and return the meter. All fees incurred by the Contractor in obtaining the meter and utilizing the water supply will be reimbursed to him by the Owner.

In the event that the on-site water supply is curtailed or terminated by the Owner or by ordinance during the period the Contract is in effect, or that there is no on-site sources of water, the Contractor shall supply water from off-site in sufficient quantities to complete the job. Compensation for this additional item will be in accordance with a solicited price quote. If authorization to supply off-site water is not given to the Contractor by the Owner, when the Owner is unable to supply the water in sufficient quantities, the Contractor shall not be left responsible for damage to new plantings (plant materials & sod) or failure of seed to germinate and grow caused a direct result of an inadequate water supply.

PART 3 - EXECUTION

3.1 SEED - The accepted seasons for sowing seed in lawn areas shall be defined as follows:

PLANTING SEASONS	SPRING	FALL
Turf grass	April 1 * to May 31	Aug. 15 to Sept. 30

*** or as soon as the soil is free of frost and in a workable condition.**

Seeding during other time periods shall require the approval of the Owner and/or Landscape Architect. All sowing of seed shall be completed after all trees and shrubs have been installed, if any.

3.2 SOD - The accepted seasons for laying sod shall be as follows:

1. **SPRING SODDING shall be performed from the time the soil becomes workable and unfrozen sod becomes available to June 15.**
2. **FALL SODDING shall be performed from August 15 to October 31.**

Sodding during the summer season, defined as June 16 to August 14, will be acceptable if the area is served by an operational irrigation system. Sodding after November 1 shall be considered unseasonable and will require the approval of the Landscape Architect or Owner.

3.3 REQUIRED MAINTENANCE

The Contractor shall be responsible for maintaining all newly seeded and sodded areas until such a time as these areas are granted acceptance by the Owner and/or Landscape Architect. Maintenance during this time period shall and consist of watering, mowing, fertilization and herbicide application, as well as any other horticultural practices necessary to establish an acceptable stand of grass.

A. WATERING

1. **The Contractor shall water all newly seeded** areas once immediately upon completion. Additional watering shall be performed as needed in the absence of adequate rainfall. All water should be applied as a spray or dispersion to prevent run-off or damage. The Contractor shall be responsible for watering until turf is established and accepted. If the Owner supplies an in-ground irrigation system, the Contractor shall be responsible for monitoring the effectiveness of the system and shall report any problems with the system to the Owner immediately, followed up in writing. If the Owner does not provide an irrigation system, then additional watering shall be performed in accordance with the Supplemental Bids where alternate watering prices shall be quoted. If this work item is not included as part of the original Contract, it must be authorized. Compensation shall be in accordance with the Supplemental Bid Prices. If the Owner fails to supply water or authorize supplemental watering the Contractor's warranty for providing an established stand of turf will be voided.

2. The Contractor shall water all newly installed **sod** immediately. The Contractor shall remain responsible for watering through three (3) applications. If the Owner supplies an in-ground irrigation system included in the scope of these improvements, the Contractor shall be responsible for monitoring the effectiveness of the system and shall report any problems with the system to the Owner immediately, followed up in writing. If the Owner does not provide an irrigation system, then additional watering shall be performed in accordance with the Supplemental Bids where alternate watering prices shall be quoted. If this work item is not included as part of the original Contract, it must be authorized. Compensation shall be in accordance with the Supplemental Bid Prices. If the Owner fails to supply water or authorize supplemental watering the Contractor's warranty for providing an established stand of turf will be voided. Watering after the required three (3) waterings shall be the responsibility of the Owner, or in accordance with authorized supplemental watering.

B. MOWING

1. The Contractor shall mow all **seeded** areas three (3) times. The three (3) mowings shall be performed once the turf has reached a height of three inches (3") and shall maintain the turf at 2-2½". At no time should more than 1/3 of the leaf blade be removed by any mowing.

2. The Contractor shall mow all **sodded** areas once. The one (1) mowing shall be performed once the turf has reached a height of three inches (3"). At no time should more than 1/3 of the leaf blade be removed by any mowing.

C. FERTILIZATION

1. **Seeded** areas after completion of the second required mowing, the Contractor shall apply an 18-5-9 commercial fertilizer at the rate of 15 pounds per 1,000 square feet (650 lbs/ac.) to all turf areas using a mechanical spreader and by making two (2) passes at right angles to each other.

2. **Sodded** area after completion of the required mowing, the Contractor shall apply an 18-5-9 commercial fertilizer at the rate of 15 pounds per 1,000 square feet (650 lbs/ac.) to all turf areas using a mechanical spreader and by making two passes at right angles to each other.

D. HERBICIDE

The Contractor shall be responsible for one (1) application of a weed control product no sooner than the second mowing with the areas seeded. The product shall reflect the specific weed problem which may exist.

3.4 ACCEPTANCE

Acceptance of seeded areas will be determined by the Owner and/or Landscape Architect.
Acceptance shall be granted upon conformance with the following:
1. Grass shall display a reasonably uniform distribution of grass plants.
2. Grass shall display vigorous growth and be green and healthy in appearance.
3. Grass shall have received the required mowings, fertilization and herbicide application.

The Contractor shall not be held liable for damage incurred to the seed areas caused by deicing compounds, toxic substances, fertilizers, pesticides and other materials not specified or not applied by him or under his supervision, nor those damages caused by vandalism or acts of nature.

3.5 GUARANTEE

The Contractor shall guarantee the provision of a green, healthy relatively weed free turf at the time of acceptance.

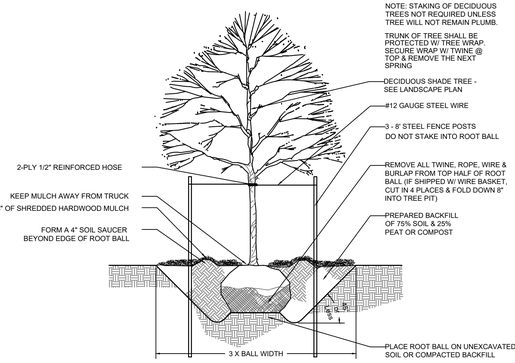

DECIDUOUS TREE n.t.s.

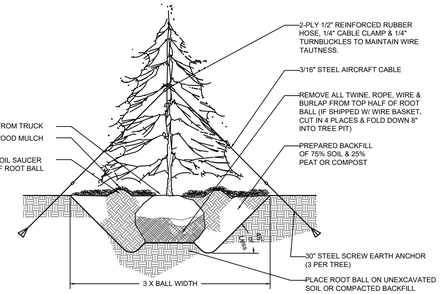

EVERGREEN TREE n.t.s.

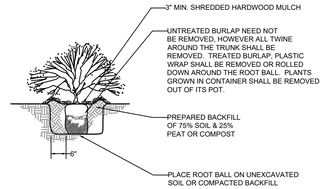

SHRUBS n.t.s.

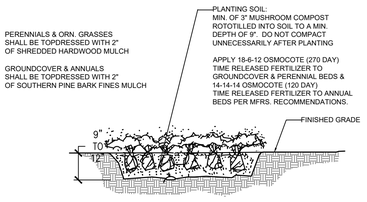

BED PLANTING DETAIL n.t.s.
(PERENNIALS, ORNAMENTAL GRASSES VINES, GROUNDCOVER & ANNUALS)

REVISIONS

2	Village Review Comments	11-16-22
1	Alternative Site Plan	11-08-22

ENCLAVE OF HIGHLAND FIELDS

11731 W. 87th STREET
BURR RIDGE, ILLINOIS

If this plan is not 24" x 36" in size, then it is a reproduction that may not be to scale
Except embodied herein in any form, in whole or in part, without consent from Metz & Company is prohibited.

SEAL:
STATE OF ILLINOIS
RANDY F. METZ
no. 157-000422
LANDSCAPE

METZ & COMPANY
LANDSCAPE ARCHITECTURE/SITE PLANNING
826 East Maple Street
Lombard, Illinois 60148
PH: 630.561.3903
www.metz-company.com

TITLE
LANDSCAPE PLAN

PROJECT NO.: 21-171

DATE: 10-20-2022

SCALE: 1"=50'

SHEET
L-3.0

© Copyright 2020 all rights reserved. The design and any and all ideas contained herein are the sole property of Metz & Company. Any reproduction of the design or the concept embodied

L:\Projects\2022\22-0035\Engineering\DWG\Auto Turn\22-0035 AT.dwg Plot Date:11/18/2022 12:24:54 PM By:dvieth

BURR RIDGE
R-3

87TH STREET

585.5'

50.0'

585.4'

342.6'

188.1'

10.0'

28.0'

132.7'

40' B.S.L.

10' P.U.D.E.

LOT 1

LOT 2

LOT 3

LOT 4

LOT 5

LOT 6

LOT 7

LOT 8

LOT 9

LOT 10

LOT 11

LOT 12
FIRE TRUCK BUMPER OVER HANG TRACK

LOT 13

LOT 14

LOT 15

LOT 16

LOT 17

LOT 18

LOT 19

LOT 20

OUTLOT A

OUTLOT B

OUTLOT C

OUTLOT D

OUTLOT E

OUTLOT F

OUTLOT G

OUTLOT H

HERITAGE DRIVE

20' B.S.L.

FIRE TRUCK WHEEL TRACK

EMERGENCY ACCESS

PROPOSED
BURR RIDGE
R-3 PUD

BURR RIDGE
R-2A

COOK COUNTY
R-1

WILLOW SPRINGS
SR-1

GRAPHIC SCALE
50 0 25 50
(IN FEET)
1 inch = 50 ft.

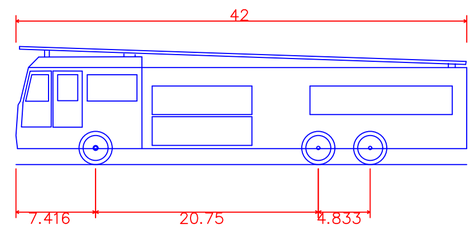

FIRE TRUCK	
Overall Length	42.000ft
Overall Width	8.830ft
Overall Body Height	11.000ft
Min Body Ground Clearance	1.480ft
Track Width	8.830ft
Lock-to-lock time	6.00s
Max Wheel Angle	45.00°

1 OF 1

PROJECT INFORMATION
Project No.: 22-0035
Scale: 1" = 50'
Date: 11-18-2022
Design By: SDS
Drawn By: NSM
Checked By: SDS

DESIGNTEK ENGINEERING, INC.
CONSULTING, CIVIL ENGINEERING & LAND SURVEYING
9930 W. 190TH STREET, SUITE L
MOKENA, ILLINOIS 60448
(708) 326-4961
FAX: (708) 326-4962
IL PROF. LIC. NO.: 184-003740

FIRE TRUCK AUTOTURN EXHIBIT
FOR
ENCLAVE OF BURR RIDGE
11737 87TH STREET
BURR RIDGE, ILLINOIS

McNAUGHTON DEVELOPMENT
11S220 JACKSON ST. Ste. 101
BURR RIDGE, ILLINOIS 60527
(630) 325-3400

REVISIONS

NO.	DATE	DESCRIPTION	BY

FIRE TRUCK AUTOTURN EXHIBIT

McNaughton DEVELOPMENT, LLC

YOUR LUXURY HOME BUILDER

Enclave of Highland Fields

Architectural Character Elevations

10/22/2022

Ashford Ranch Model Elevation A



Ashford Ranch Model Elevation B



Astoria Master 1st Floor Model A



Astoria Master 1st Floor Model B



Bostonian Master 1st Floor Model A



Bostonian Master 1st Floor Model B



Bostonian Master 1st Floor Model C

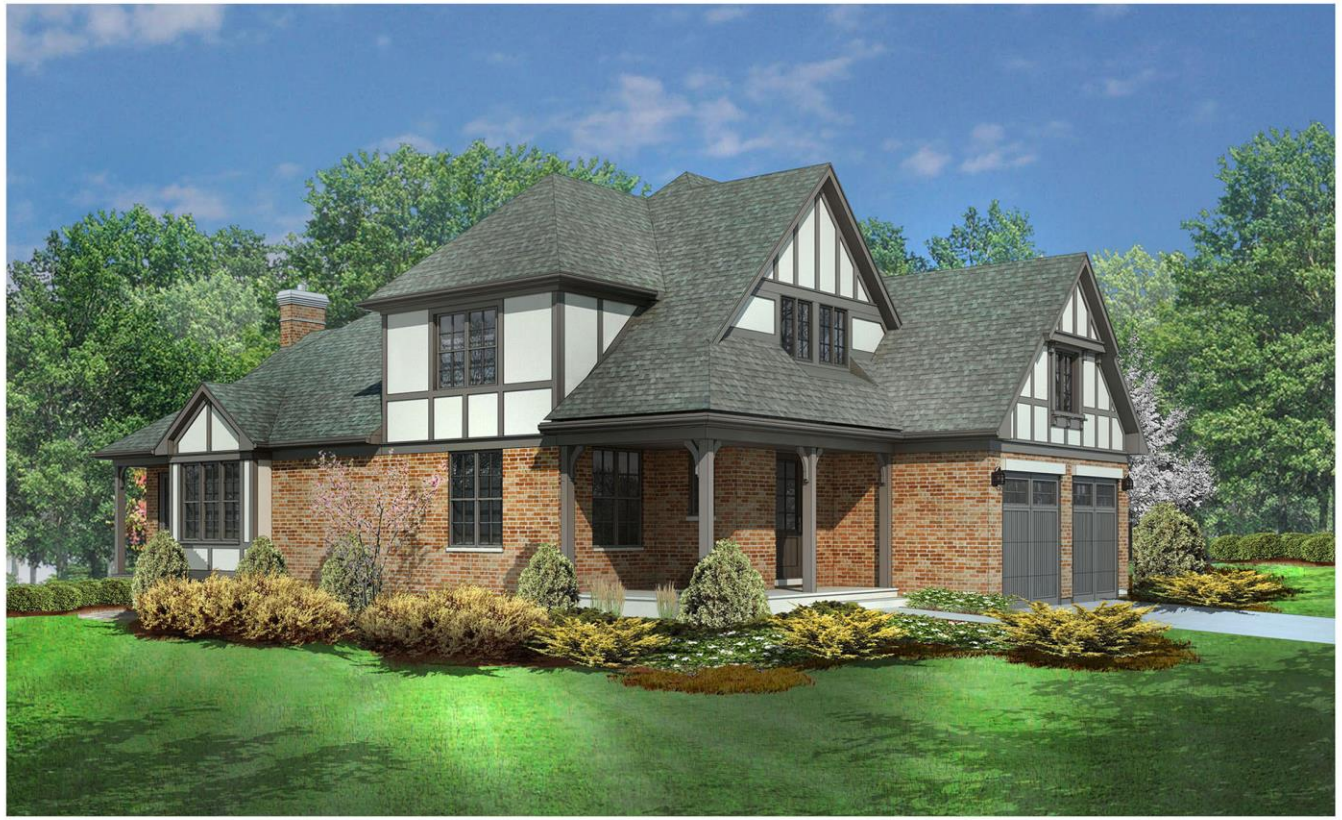

Bostonian Master 1st Floor Model D



Bostonian Master 1st Floor Model E



Bostonian Master 1st Floor Model F



Bostonian Master 1st Floor Model G



Brunswick Ranch Model A



Brunswick Ranch Model B



Brunswick Ranch Model C



Brunswick Ranch Model D



Brunswick Ranch Model E



Brunswick Ranch Model F



Brunswick Ranch Model G



Brunswick Ranch Model H



Carlisle Master 1st Floor Model A



Carlisle Master 1st Floor Model B



Carlisle Master 1st Floor Model C



Carlisle Master 1st Floor Model D



Carlisle Master 1st Floor Model E



Essex Ranch Model A



Essex Ranch Model B



Fenwick Ranch Model A



Fenwick Ranch Model B



Fenwick Ranch Model C



Fenwick Ranch Model D



Fenwick Ranch Model E



Fenwick Rach Model F



Fenwick Ranch Model G



Fenwick Ranch Models H



Approved Building Materials

- Masonry brick & stone veneer front elevations
- LP SmartSide siding all elevations including
  - Horizontal
  - Shake
  - Board and Batt
- Stucco on limited select elevations
- GAF Timberline HDZ asphalt roof shingles w/ PacClad details per elevation
- Aluminum facia/ soffit, gutters and downspouts
- Vinyl double hung and casement windows
- Steel overhead garage doors
- Fir front entry doors



Anti-Monotony



In order to preserve the architectural and aesthetic quality of the Enclave of Highland Fields subdivision, the following anti-monotony regulations shall apply to the Declarant and Owners:

1. No less than 6 different floor plans with 2 front elevations for each plan (for a total of 12 variations) shall be offered within the Subdivision;
2. Adjacent lots (on the same side of the street) shall comply with this Section by complying with at least one or more of the following prohibitions:
    a. Adjacent lots shall not utilize the same floor plan and elevation; or
    b. Adjacent lots that utilize the same floor plan and elevation shall be required to both:
        i. Change the colors of the following building materials:
            1. Siding.
            2. Metal roof.
            3. Shingle roof.
            4. Front door.
            5. Overhead door(s), and;
        ii. Change the masonry on the home from brick to stone.
3. In no event shall the same floor plan and elevation be used on 3 adjacent lots (irrespective of color scheme or the changing the masonry from brick to stone).
4. Declarant reserves the right to offer more than 2 front elevations for each plan, and, in such case, shall provide such alternate elevations to the Village of Burr Ridge for its review and approval thereof.

Traffic Impact Study
Proposed Residential Development

Burr Ridge, Illinois



Prepared For:

McNaughton DEVELOPMENT, INC.
LAND DEVELOPMENT – CUSTOM CONSTRUCTION

KLOA
Kenig, Lindgren, O'Hara, Aboona, Inc.

September 30, 2022

1. Introduction

This report summarizes the methodologies, results, and findings of a traffic impact study conducted by Kenig, Lindgren, O'Hara, Aboona, Inc. (KLOA, Inc.) for a proposed residential development to be located in Burr Ridge, Illinois. The site is located on the south side of 87th Street just east of Johnston Road. As proposed, the site will be developed with 20 single-family homes. Access to the development will be provided via a full-movement access roadway off 87th Street and via an emergency only access connection to the west with Heritage Drive.

The purpose of this study was to examine background traffic conditions, assess the impact that the proposed development will have on traffic conditions in the area, and determine if any roadway or access improvements are necessary to accommodate traffic generated by the proposed development.

Figure 1 shows the location of the site in relation to the area roadway system. **Figure 2** shows an aerial view of the site area.

The sections of this report present the following:

- Existing roadway conditions
- A description of the proposed development
- Directional distribution of the development traffic
- Vehicle trip generation for the development
- Future traffic conditions including access to the development
- Traffic analyses for the weekday morning and evening peak hours
- Recommendations with respect to adequacy of the site access system and adjacent roadway system

Traffic capacity analyses were conducted for the weekday morning and evening peak hours for the following conditions:

1. Existing Conditions - Analyzes the capacity of the existing roadway system using existing peak hour traffic volumes in the surrounding area.

2. Future Conditions - The future projected traffic volumes include the existing traffic volumes, ambient area growth not attributable to any particular development and the traffic estimated to be generated by the proposed subject development.

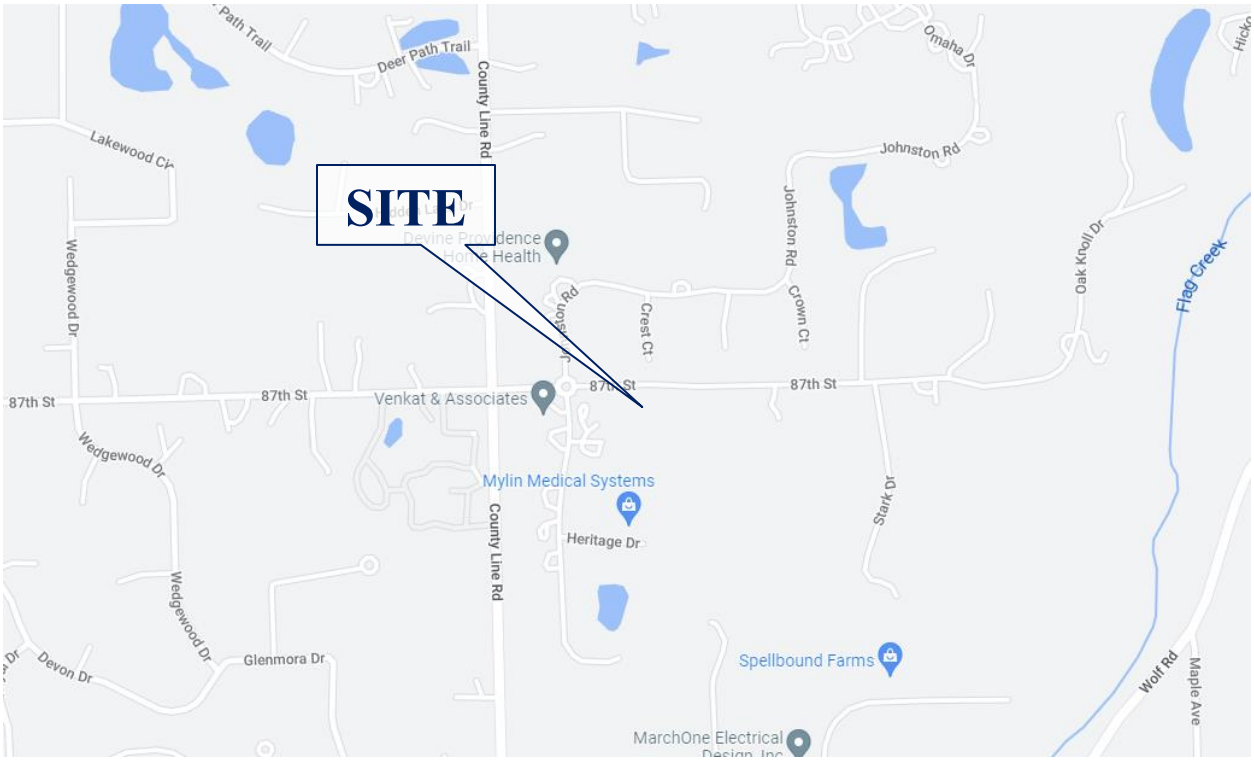

Site Location **Figure 1**



Aerial View of Site Location **Figure 2**

2. Existing Conditions

Existing transportation conditions in the vicinity of the site were documented based on field visits conducted by KLOA, Inc. in order to obtain a database for projecting future conditions. The following provides a description of the geographical location of the site, physical characteristics of the area roadway system including lane usage and traffic control devices, and existing peak hour traffic volumes.

Site Location

The site is located on the south side of 87th Street just east of Johnston Road. Land uses in the vicinity of the site are primarily single-family residential in all directions around the site.

Existing Roadway System Characteristics

The characteristics of the existing roadways near the development are described below and illustrated in **Figure 3**.

County Line Road is a north-south major collector roadway that in the vicinity of site provides one through lane in each direction. At its unsignalized intersection with 87th Street, County Line Road provides an exclusive left-turn lane and a shared through/right-turn lane on both approaches. County Line Road is under the jurisdiction of Cook County Department of Transportation and Highways, carries an Annual Average Daily Traffic (AADT) volume of 5,200 vehicles (IDOT 2018) north of 87th Street and an AADT volume of 3,200 vehicles (IDOT 2018) south of 87th Street, and has a posted speed limit of 40 miles per hour.

87th Street is an east-west dead-end local roadway that provides one lane in each direction and extends from Madison Street west of County Line Road and ends up as Oak Knoll Drive. At its unsignalized intersection with County Line Road, 87th Street provides a shared left-turn/through lane and an exclusive right-turn lane on westbound approach and a shared left-turn/through/right-turn lane on the eastbound approach. At its roundabout intersection with Johnston Road, 87th Street provides one lane on both approaches with both approaches under yield sign. 87th Street is under the jurisdiction of the Village of Burr Ridge west of County Line Road, and it is under the jurisdiction of Lyons Township west of County Line Road. 87th Street has a posted speed limit of 25 miles per hour to the east of County Line Road increasing to 30 miles per hours west of County Lane Road.

Johnston Road is a north-south local roadway that provides one lane in each direction. At its roundabout intersection with 87th Street, Johnston Road provides on lane on both approaches and the approaches are under yield sign. Johnston Road is under the jurisdiction of the Village of Burr Ridge and has a posted speed limit of 25 miles per hour on both approaches.

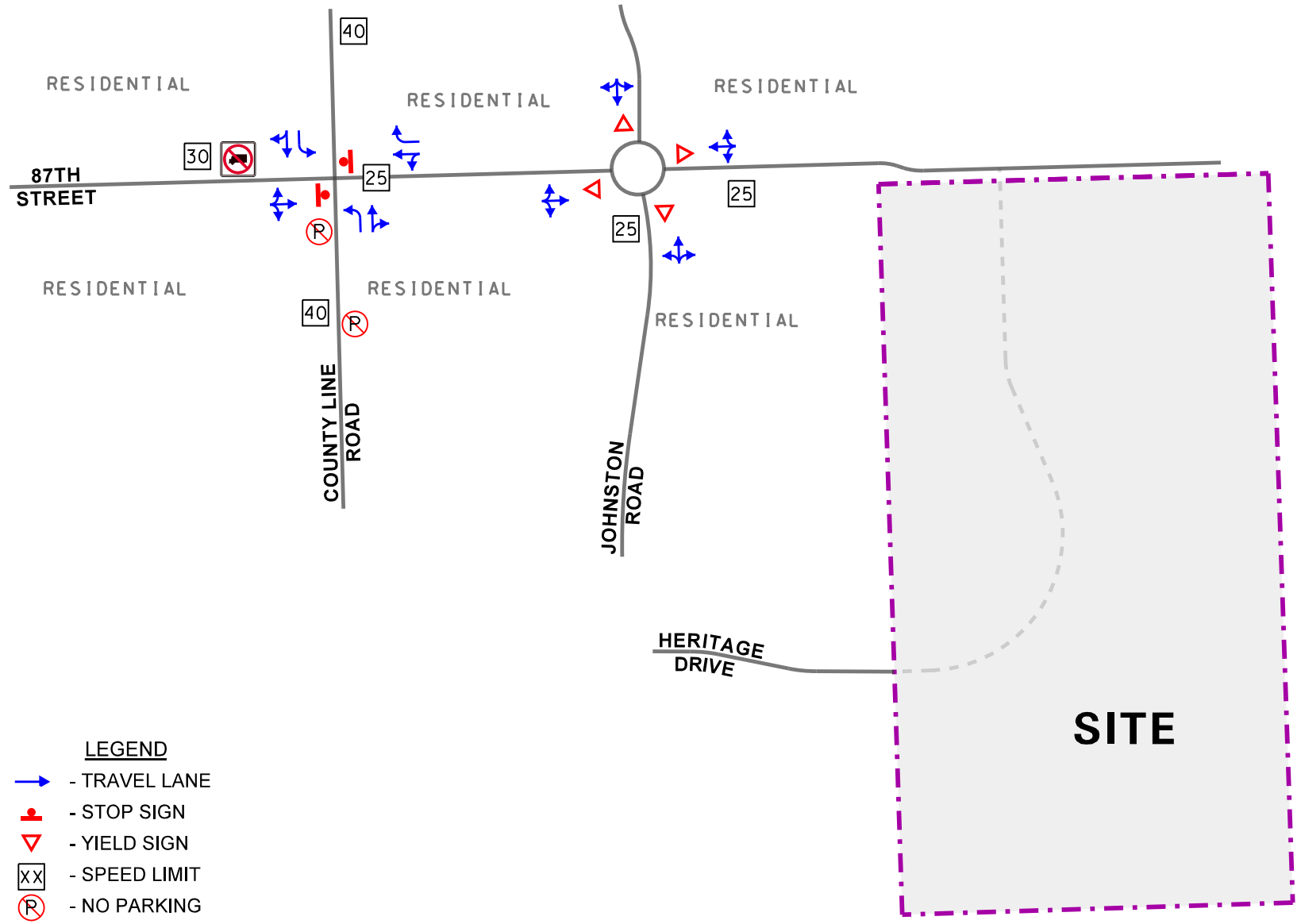

Proposed Residential Development
Burr Ridge, Illinois

Existing Roadway Characteristics

KLOA
Kenig,Lindgren,O'Hara,Aboona,Inc.

Job No: 22-283

Figure: 3

Existing Traffic Volumes

In order to determine current traffic conditions in the vicinity of the site, KLOA, Inc. conducted peak period traffic counts utilizing Miovision Scout Collection Units on Tuesday, August 30, 2022, during the weekday morning (7:00 to 9:00 A.M.) and evening (4:00 to 6:00 P.M.) peak periods, at the following intersections:

- County Line Road with 87th Street
- 87th Street with Johnston Road

The results of the traffic counts showed that the weekday morning peak hour of traffic occurs from 7:45 A.M. to 8:45 A.M. and the evening peak hour of traffic occurs from 4:00 P.M. to 5:00 P.M. **Figure 4** illustrates the existing peak hour traffic volumes. Copies of the traffic count summary sheets are included in the Appendix.

Crash Analysis

KLOA, Inc. obtained crash data[1] from the Illinois Department of Transportation (IDOT) Division of Traffic Safety for the past five years (2017 to 2021) for the intersections of 87th Street with County Line Road and Johnston Road. A review of the crash data indicated that no crashes were reported at the intersection of 87th Street with Johnston Road and only one accident was reported at the intersection of 87th Street with County Line Road during the reviewed period. The crash data report for the intersection of 87th Street with County Line Road is tabulated in **Table 1**. No fatalities at any of the studied intersections were reported during the reviewed period.

[1] IDOT DISCLAIMER: The motor vehicle crash data referenced herein was provided by the Illinois Department of Transportation. Any conclusions drawn from analysis of the aforementioned data are the sole responsibility of the data recipient(s). Additionally, for coding years 2015 to present, the Bureau of Data Collection uses the exact latitude/longitude supplied by the investigating law enforcement agency to locate crashes. Therefore, location data may vary in previous years since data prior to 2015 was physically located by bureau personnel.

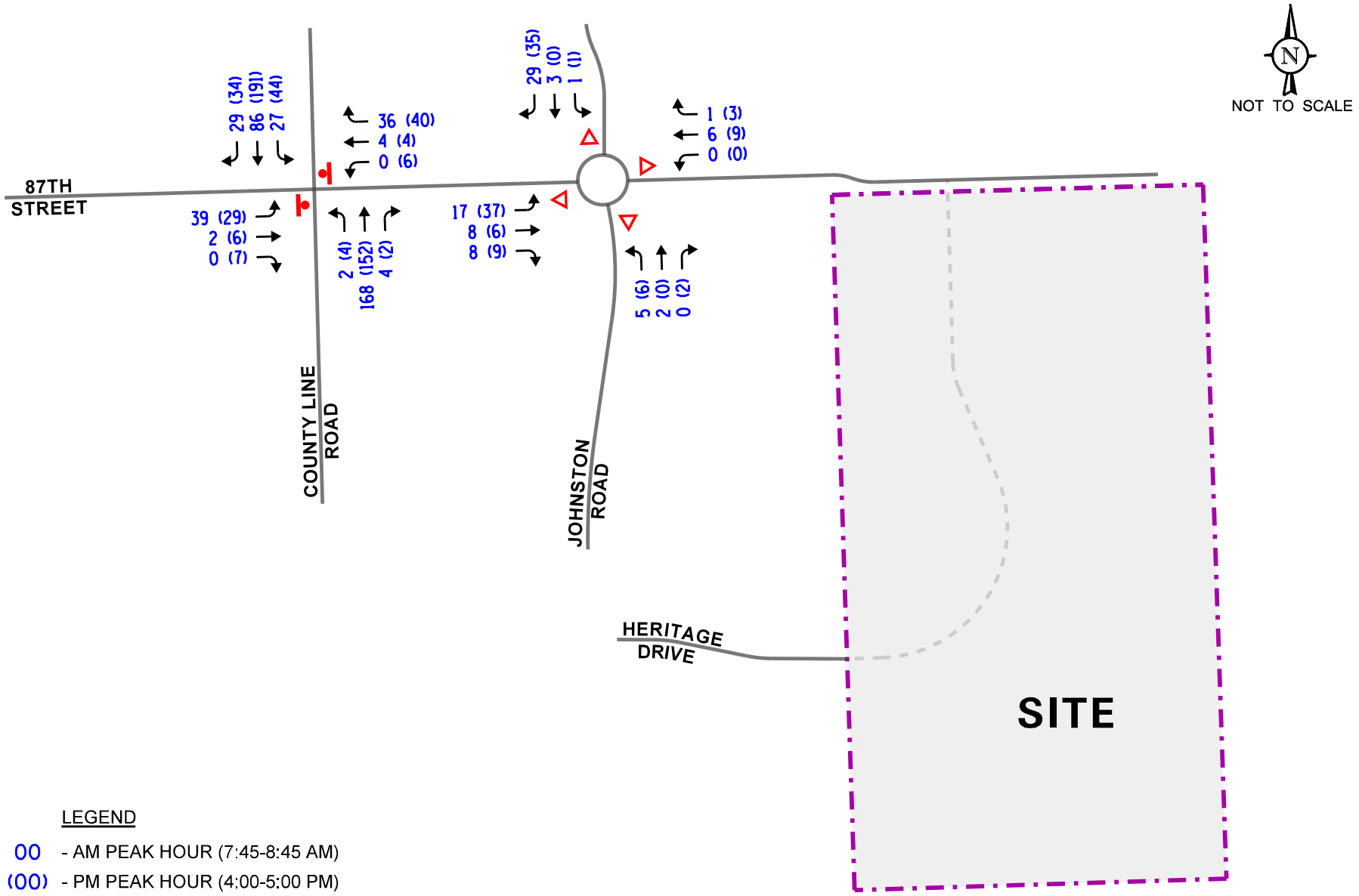

Proposed Residential Development
Burr Ridge, Illinois

Year 2022 Base Traffic Volumes

KLOA
Kenig,Lindgren,O'Hara,Aboona,Inc.

Job No: 22-283

Figure: 4

Table 1
87th STREET WITH COUNTY LINE ROAD – CRASH SUMMARY

Year	Type of Crash Frequency							
	Angle	Head On	Object	Rear End	Sideswipe	Turning	Other	Total
2017	1	0	0	0	0	0	0	1
2018	0	0	0	0	0	0	0	0
2019	0	0	0	0	0	0	0	0
2020	0	0	0	0	0	0	0	0
2021	0	0	0	0	0	0	0	0
Total	**1**	**0**	**0**	**0**	**0**	**0**	**0**	**1**
Average	**<1.0**	**--**	**--**	**--**	**--**	**--**	**--**	**<1.0**

3. Traffic Characteristics of the Proposed Development

In order to properly evaluate future traffic conditions in the surrounding area, it was necessary to determine the traffic characteristics of the proposed development, including the directional distribution and volumes of traffic that it will generate.

Proposed Site and Development Plan

As proposed, the plans call for developing the site with 20 single-family homes. Access to the development will be provided via a full-movement access roadway located off 87th Street approximately 550 feet east of the roundabout intersection with Johnston Road. This access drive will provide one inbound lane and one outbound lane with outbound movements under stop sign control. In addition, an emergency access only will be provided to the west with Heritage Drive. This entrance will be gated at all times. A copy of the site plan depicting the proposed development is included in the Appendix.

Directional Distribution

The directions from which residents and guests of the single-family units will approach and depart the development were estimated based on existing travel patterns, as determined from the traffic counts. **Figure 5** illustrates the directional distribution of the traffic projected to be generated by the single-family units.

Peak Hour Traffic Volumes

The volume of traffic generated by a development is based on the type of land uses and the size of the development. The number of peak hour vehicle trips estimated to be generated by the proposed development of 20 single family homes was based on vehicle trip generation rates contained in *Trip Generation Manual*, 11th Edition, published by the Institute of Transportation Engineers (ITE). **Table 2** shows the site-generated traffic volumes for the proposed residential development. Copies of the ITE sheets are included in the Appendix

Table 2
PROJECTED SITE-GENERATED TRAFFIC VOLUMES

ITE Land Use Code	Type/Size	Weekday Morning Peak Hour			Weekday Evening Peak Hour			Daily Two-Way Traffic
		In	Out	Total	In	Out	Total	
210	Single-Family Housing (20 Units)	4	13	17	14	8	22	230

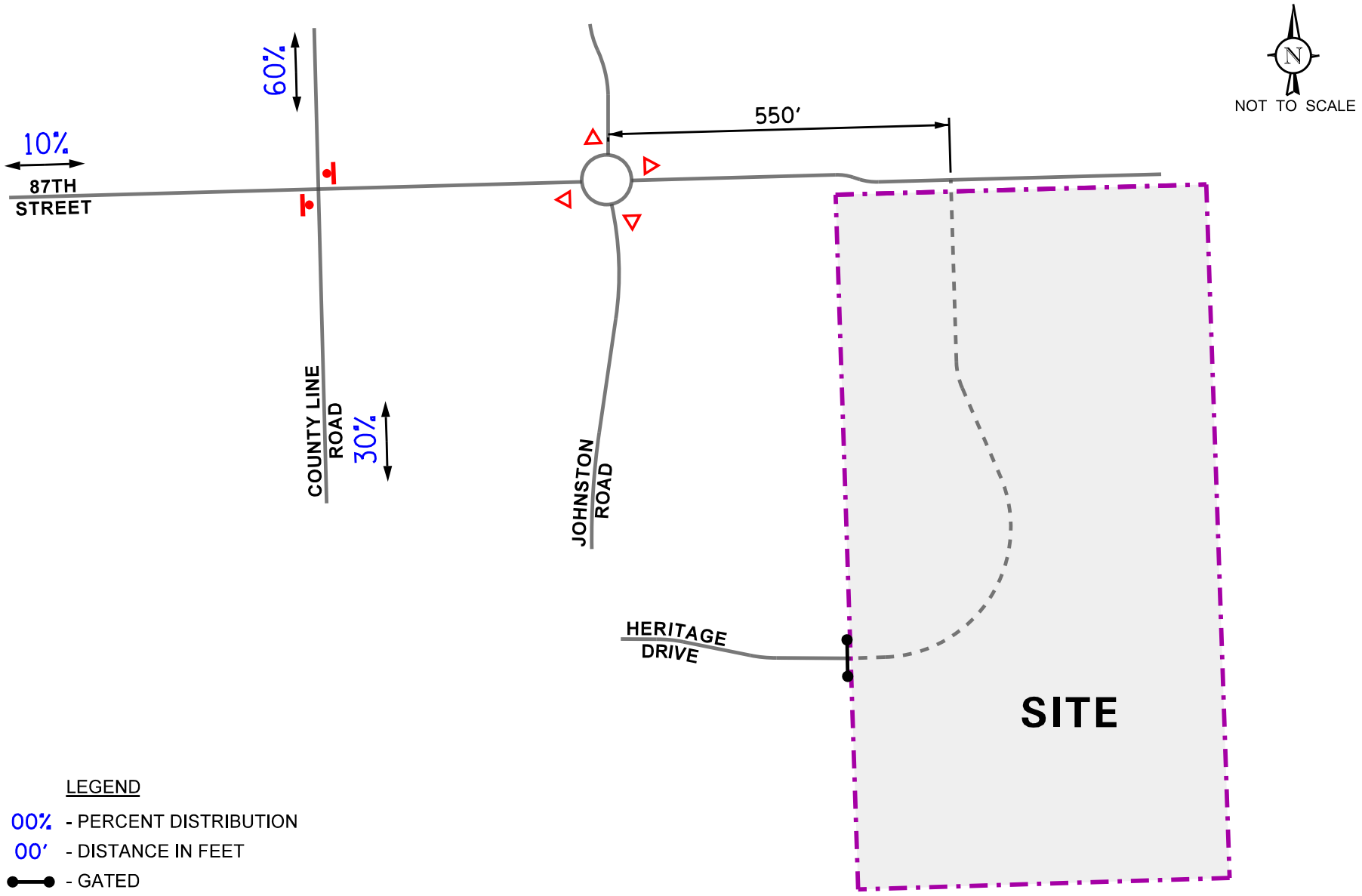

Proposed Residential Development
Burr Ridge, Illinois

Directional Distribution

KLOA
Kenig,Lindgren,O'Hara,Aboona,Inc.

Job No: 22-283

Figure: 5

4. Projected Traffic Conditions

The total projected traffic volumes include the existing traffic volumes, increase in background traffic due to growth, and the traffic estimated to be generated by the proposed subject development.

Development Traffic Assignment

The estimated weekday morning and evening peak hour traffic volumes that will be generated by the proposed residential development were assigned to the roadway system in accordance with the previously described directional distribution (Figure 5). The traffic assignment for the residential development is illustrated in **Figure 6.**

Background Traffic Conditions

The existing traffic volumes (Figure 4) were increased by a regional growth factor to account for the increase in existing traffic related to regional growth in the area (i.e., not attributable to any particular planned development). Based on Annual Average Daily Traffic (AADT) projections provided by the Chicago Metropolitan Agency for Planning (CMAP), the existing traffic volumes are projected to increase by an annual compounded growth rate of approximately 0.3 percent. As such, traffic volumes were increased by two percent to represent Year 2028 no-build conditions. A copy of the CMAP projections letter is included in the Appendix.

Total Projected Traffic Volumes

The development-generated traffic was added to the existing traffic volumes accounting for background growth to determine the Year 2028 total projected traffic volumes, as shown in **Figure 7**.

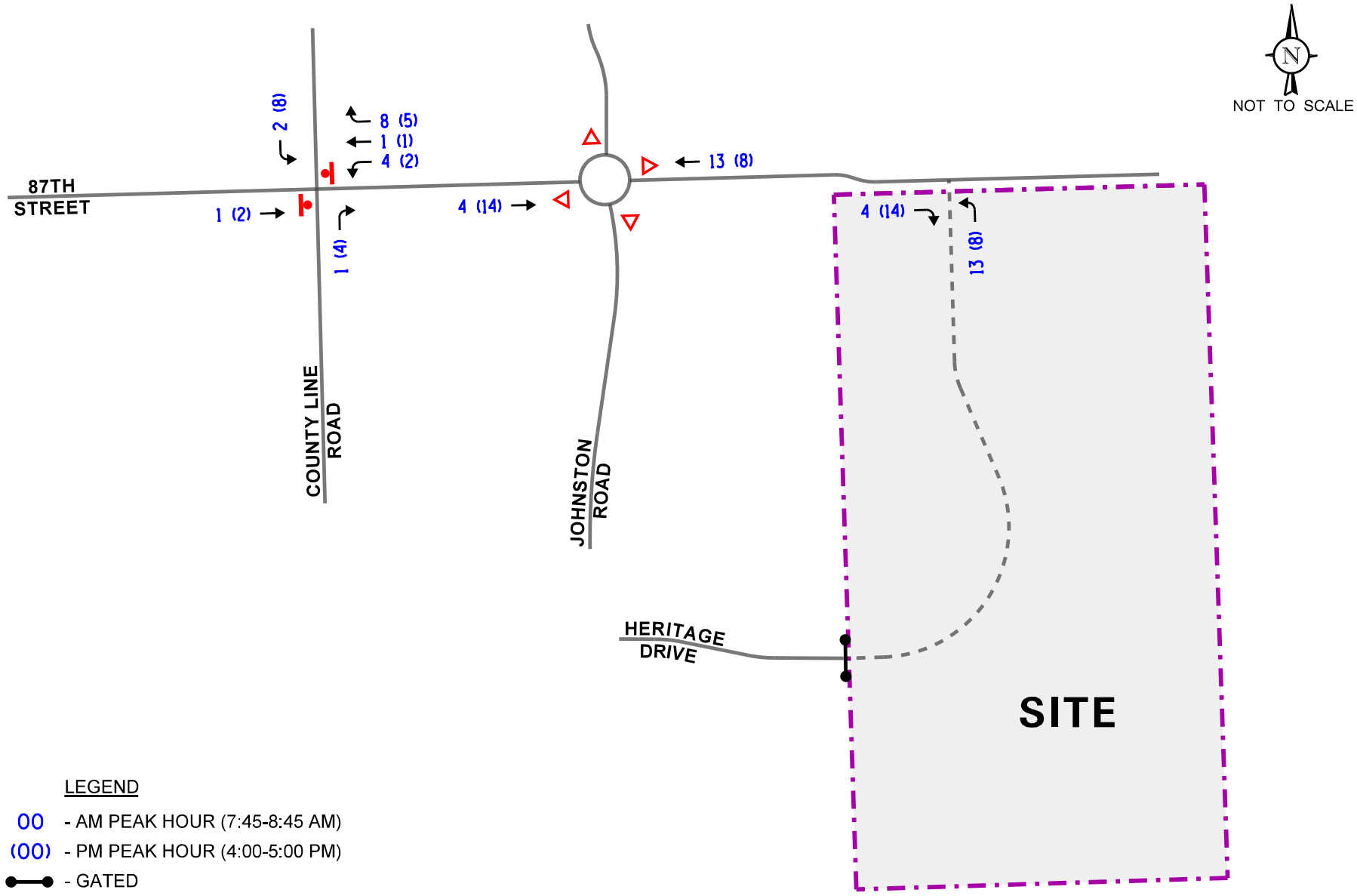

Proposed Residential Development
Burr Ridge, Illinois

Site-Generated Traffic Volumes

KLOA
Kenig,Lindgren,O'Hara,Aboona,Inc.

Job No: 22-283 Figure: 6

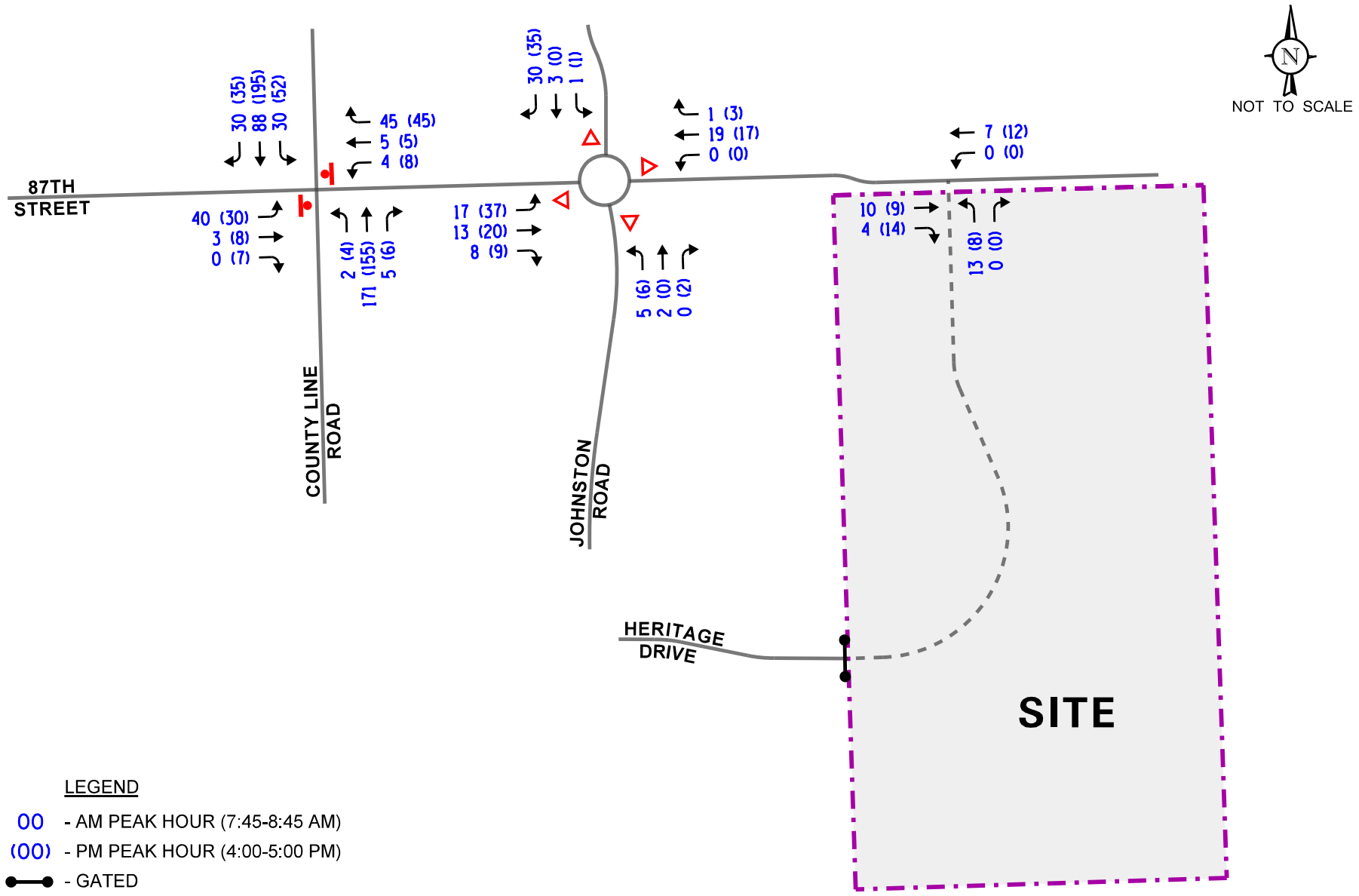

Proposed Residential Development
Burr Ridge, Illinois

Year 2028 Total Projected Traffic Volumes

KLOA
Kenig,Lindgren,O'Hara,Aboona,Inc.

Job No: 22-283

Figure: 7

5. Traffic Analysis and Recommendations

The following provides an evaluation conducted for the weekday morning and evening peak hours. The analysis included conducting capacity analyses to determine how well the roadway system and access drives are projected to operate and whether any roadway improvements or modifications are required.

Traffic Analyses

Roadway and adjacent or nearby intersection analyses were performed for the weekday morning and evening peak hours for the existing (Year 2022) and future projected (Year 2028) traffic volumes.

The traffic analyses were performed using the methodologies outlined in the Transportation Research Board's *Highway Capacity Manual (HCM), 6th Edition* and analyzed using the Synchro/SimTraffic 11 software.

The analyses for the unsignalized intersections determine the average control delay to vehicles at an intersection. Control delay is the elapsed time from a vehicle joining the queue at a stop sign (includes the time required to decelerate to a stop) until its departure from the stop sign and resumption of free flow speed. The methodology analyzes each intersection approach controlled by a stop sign and considers traffic volumes on all approaches and lane characteristics.

The ability of an intersection to accommodate traffic flow is expressed in terms of level of service, which is assigned a letter from A to F based on the average control delay experienced by vehicles passing through the intersection. The *Highway Capacity Manual* definitions for levels of service and the corresponding control delay for signalized intersections and unsignalized intersections are included in the Appendix of this report.

Summaries of the traffic analysis results showing the level of service and overall intersection delay (measured in seconds) for the existing and Year 2028 total projected conditions are presented in **Tables 3** and **4**. A discussion of the intersections follows. Summary sheets for the capacity analyses are included in the Appendix.

Table 3
CAPACITY ANALYSIS RESULTS – EXISTING CONDITIONS

Intersection	Weekday Morning Peak Hour		Weekday Evening Peak Hour	
	LOS	Delay	LOS	Delay
County Line Road with 87th Street				
• Eastbound Approach	B	12.1	B	14.2
• Westbound Approach	A	9.6	B	10.4
• Northbound Left Turn	A	7.4	A	8.1
• Southbound Left Turn	A	7.7	A	7.7
Jonhston Road with 87th Street				
• Overall	A	3.1	A	3.2
• Eastbound Approach	A	3.1	A	3.1
• Westbound Approach	A	2.8	A	3.4
• Northbound Approach	A	2.8	A	3.1
• Southbound Approach	A	3.2	A	3.3

LOS = Level of Service
Delay is measured in seconds.

Table 4
CAPACITY ANALYSIS RESULTS - PROJECTED TRAFFIC CONDITIONS

Intersection	Weekday Morning Peak Hour		Weekday Evening Peak Hour	
	LOS	Delay	LOS	Delay
County Line Road with 87th Street				
• Eastbound Approach	B	12.5	B	14.9
• Westbound Approach	A	9.8	B	10.7
• Northbound Left Turn	A	7.4	A	8.1
• Southbound Left Turn	A	7.7	A	7.8
Jonhston Road with 87th Street				
• Overall	A	3.1	A	3.2
• Eastbound Approach	A	3.1	A	3.2
• Westbound Approach	A	2.8	A	3.2
• Northbound Approach	A	2.8	A	3.2
• Southbound Approach	A	3.2	A	3.3
87th Street with Proposed Access Drive				
• Northbound Approach	A	8.6	A	8.7
• Westbound Left Turn	A	--	A	--

LOS = Level of Service
Delay is measured in seconds.

Discussion and Recommendations

The following summarizes how the intersections are projected to operate and identifies any roadway and traffic control improvements necessary to accommodate the development-generated traffic.

County Line Road with 87th Street

The results of the capacity analysis indicate that currently the eastbound approach operates at LOS B during both weekday morning and evening peak hours. The westbound approach currently operates at LOS A during the weekday morning peak hour and LOS B during the weekday evening peak hour. Both northbound and southbound left-turn movements operate at LOS A during both peak hours.

Under Year 2028 total projected conditions, the eastbound approach will continue to operate at LOS B during both peak hours with increases in delay of less than one second. The westbound approach is projected to operate at the same existing levels of service during both peak hours with increases in delay of less than one second. Both northbound and southbound left-turn movements will continue operating at LOS A during both peak hours with increases in delay of less than one second. Furthermore, the westbound 95th percentile queue will be 50 feet or less and will not extend to Johnston Road. As such, the traffic that will be generated by the proposed development will have a limited impact on the operation of this intersection and no geometric or traffic control improvements will be necessary in conjunction with the proposed development.

87th Street with Johnston Road

The results of the capacity analysis indicate that currently the intersection of 87th Street with Johnston Road and all its approaches operate at LOS A during both peak hours.

Under Year 2028 total projected conditions, this intersection and all its approaches will continue operating at LOS A during both peak hours with increases in delay of less than one second. As such, the traffic that will be generated by the proposed development will have a limited impact on the operation of this roundabout.

87th Street with Proposed Full-Movement Access Drive

Under Year 2028 total projected conditions, the northbound approach will operate at LOS A during both peak hours with 95th percentile queues of 50 feet or less. As such this access drive will be adequate in accommodating the traffic that will be generated by the proposed development efficiently.

Based on a review of the projected traffic volumes and the requirements for the provision of auxiliary lanes published in Chapter 36 of the IDOT *Bureau of Design and Environment* (BDE) Manual, an exclusive eastbound right-turn lane will not be warranted.

6. Conclusion

Based on the preceding analyses and recommendations, the following conclusions have been made:

- The development is well-located with respect to the area roadway system.
- The traffic that will be generated by the proposed development can be accommodated by the existing geometric configurations of the area roadways and will not have a significant impact on the operation of the adjacent intersections.
- The proposed access roadway is projected to operate at a good level of service and will be adequate in accommodating the development-generated traffic and will ensure that an efficient access is provided.
- An exclusive eastbound right-turn lane will not be warranted on 87th Street at its intersection with the proposed access drive.

Appendix

Traffic Count Summary Sheets
Site Plan
ITE Trip Generation Summary Sheets
CMAP 2050 Projections Letter
Level of Service Criteria
Capacity Analysis Summary Sheets

Traffic Count Summary Sheets

Kenig Lindgren O'Hara Aboona, Inc.
9575 W. Higgins Rd., Suite 400

Rosemont, Illinois, United States 60018
(847)518-9990 sainkeshavarzi@kloainc.com

Count Name: 87th St with County Ling Rd
Site Code:
Start Date: 08/30/2022

Turning Movement Data

Start Time	87th St Eastbound						87th St Westbound						County Ling Rd Northbound						County Ling Rd Southbound						Int. Total
	U-Turn	Left	Thru	Right	Peds	App. Total	U-Turn	Left	Thru	Right	Peds	App. Total	U-Turn	Left	Thru	Right	Peds	App. Total	U-Turn	Left	Thru	Right	Peds	App. Total	
7:00 AM	0	7	0	0	0	7	0	0	0	9	1	9	0	0	40	0	0	40	0	7	29	4	0	40	96
7:15 AM	0	4	0	1	1	5	0	2	0	15	2	17	0	0	41	0	0	41	0	4	13	1	0	18	81
7:30 AM	0	10	1	1	3	12	0	0	0	7	0	7	0	1	44	1	0	46	0	3	12	2	1	17	82
7:45 AM	0	11	0	0	0	11	0	0	0	13	0	13	0	1	47	1	0	49	0	11	16	4	0	31	104
Hourly Total	0	32	1	2	4	35	0	2	0	44	3	46	0	2	172	2	0	176	0	25	70	11	1	106	363
8:00 AM	0	16	0	0	0	16	0	0	0	11	0	11	0	0	43	1	0	44	0	4	13	5	0	22	93
8:15 AM	0	7	2	0	0	9	0	0	0	9	0	9	0	0	42	1	0	43	1	5	26	11	0	43	104
8:30 AM	0	5	0	0	1	5	0	0	4	3	0	7	0	1	36	1	0	38	0	6	31	9	0	46	96
8:45 AM	0	2	3	1	1	6	0	2	0	9	0	11	0	0	31	0	0	31	0	7	35	8	0	50	98
Hourly Total	0	30	5	1	2	36	0	2	4	32	0	38	0	1	152	3	0	156	1	22	105	33	0	161	391
*** BREAK ***	-	-	-	-	-	-	-	-	-	-	-	-	-	-	-	-	-	-	-	-	-	-	-	-	-
4:00 PM	0	7	1	5	0	13	0	2	1	11	0	14	0	2	42	0	0	44	0	15	50	14	0	79	150
4:15 PM	0	2	0	0	0	2	1	0	1	9	2	11	0	1	35	1	0	37	0	12	52	7	3	71	121
4:30 PM	0	12	1	1	0	14	0	1	2	12	2	15	0	0	41	1	0	42	0	11	36	7	0	54	125
4:45 PM	0	8	1	1	0	10	0	2	0	8	0	10	0	1	34	0	0	35	0	6	53	6	0	65	120
Hourly Total	0	29	3	7	0	39	1	5	4	40	4	50	0	4	152	2	0	158	0	44	191	34	3	269	516
5:00 PM	0	7	2	1	0	10	0	0	0	12	0	12	0	0	37	1	0	38	0	8	42	14	0	64	124
5:15 PM	0	8	2	0	0	10	0	0	0	11	0	11	0	0	33	2	0	35	0	10	37	11	0	58	114
5:30 PM	0	5	1	2	1	8	0	0	1	7	0	8	0	1	35	3	0	39	0	6	28	10	0	44	99
5:45 PM	0	13	3	0	0	16	0	0	1	5	0	6	0	0	27	1	0	28	0	9	39	12	0	60	110
Hourly Total	0	33	8	3	1	44	0	0	2	35	0	37	0	1	132	7	0	140	0	33	146	47	0	226	447
Grand Total	0	124	17	13	7	154	1	9	10	151	7	171	0	8	608	14	0	630	1	124	512	125	4	762	1717
Approach %	0.0	80.5	11.0	8.4	-	-	0.6	5.3	5.8	88.3	-	-	0.0	1.3	96.5	2.2	-	-	0.1	16.3	67.2	16.4	-	-	-
Total %	0.0	7.2	1.0	0.8	-	9.0	0.1	0.5	0.6	8.8	-	10.0	0.0	0.5	35.4	0.8	-	36.7	0.1	7.2	29.8	7.3	-	44.4	-
Lights	0	119	17	11	-	147	1	7	10	144	-	162	0	7	573	11	-	591	1	116	446	117	-	680	1580
% Lights	-	96.0	100.0	84.6	-	95.5	100.0	77.8	100.0	95.4	-	94.7	-	87.5	94.2	78.6	-	93.8	100.0	93.5	87.1	93.6	-	89.2	92.0
Buses	0	1	0	1	-	2	0	2	0	5	-	7	0	0	25	1	-	26	0	5	54	3	-	62	97
% Buses	-	0.8	0.0	7.7	-	1.3	0.0	22.2	0.0	3.3	-	4.1	-	0.0	4.1	7.1	-	4.1	0.0	4.0	10.5	2.4	-	8.1	5.6
Single-Unit Trucks	0	3	0	1	-	4	0	0	0	2	-	2	0	1	8	2	-	11	0	3	7	3	-	13	30
% Single-Unit Trucks	-	2.4	0.0	7.7	-	2.6	0.0	0.0	0.0	1.3	-	1.2	-	12.5	1.3	14.3	-	1.7	0.0	2.4	1.4	2.4	-	1.7	1.7
Articulated Trucks	0	1	0	0	-	1	0	0	0	0	-	0	0	0	1	0	-	1	0	0	5	0	-	5	7
% Articulated Trucks	-	0.8	0.0	0.0	-	0.6	0.0	0.0	0.0	0.0	-	0.0	-	0.0	0.2	0.0	-	0.2	0.0	0.0	1.0	0.0	-	0.7	0.4
Bicycles on Road	0	0	0	0	-	0	0	0	0	0	-	0	0	0	1	0	-	1	0	0	0	2	-	2	3

% Bicycles on Road	-	0.0	0.0	0.0	-	0.0	0.0	0.0	0.0	0.0	-	0.0	-	0.0	0.2	0.0	-	0.2	0.0	0.0	0.0	1.6	-	0.3	0.2
Pedestrians	-	-	-	-	7	-	-	-	-	-	7	-	-	-	-	-	0	-	-	-	-	-	4	-	-
% Pedestrians	-	-	-	-	100.0	-	-	-	-	-	100.0	-	-	-	-	-	-	-	-	-	-	-	100.0	-	-

Kenig Lindgren O'Hara Aboona, Inc.
9575 W. Higgins Rd., Suite 400

Rosemont, Illinois, United States 60018
(847)518-9990 sainkeshavarzi@kloainc.com

Count Name: 87th St with County Ling Rd
Site Code:
Start Date: 08/30/2022

Turning Movement Peak Hour Data (7:45 AM)

Start Time	87th St Eastbound						87th St Westbound						County Ling Rd Northbound						County Ling Rd Southbound						
	U-Turn	Left	Thru	Right	Peds	App. Total	U-Turn	Left	Thru	Right	Peds	App. Total	U-Turn	Left	Thru	Right	Peds	App. Total	U-Turn	Left	Thru	Right	Peds	App. Total	Int. Total
7:45 AM	0	11	0	0	0	11	0	0	0	13	0	13	0	1	47	1	0	49	0	11	16	4	0	31	104
8:00 AM	0	16	0	0	0	16	0	0	0	11	0	11	0	0	43	1	0	44	0	4	13	5	0	22	93
8:15 AM	0	7	2	0	0	9	0	0	0	9	0	9	0	0	42	1	0	43	1	5	26	11	0	43	104
8:30 AM	0	5	0	0	1	5	0	0	4	3	0	7	0	1	36	1	0	38	0	6	31	9	0	46	96
Total	0	39	2	0	1	41	0	0	4	36	0	40	0	2	168	4	0	174	1	26	86	29	0	142	397
Approach %	0.0	95.1	4.9	0.0	-	-	0.0	0.0	10.0	90.0	-	-	0.0	1.1	96.6	2.3	-	-	0.7	18.3	60.6	20.4	-	-	-
Total %	0.0	9.8	0.5	0.0	-	10.3	0.0	0.0	1.0	9.1	-	10.1	0.0	0.5	42.3	1.0	-	43.8	0.3	6.5	21.7	7.3	-	35.8	-
PHF	0.000	0.609	0.250	0.000	-	0.641	0.000	0.000	0.250	0.692	-	0.769	0.000	0.500	0.894	1.000	-	0.888	0.250	0.591	0.694	0.659	-	0.772	0.954
Lights	0	38	2	0	-	40	0	0	4	34	-	38	0	2	164	3	-	169	1	24	82	25	-	132	379
% Lights	-	97.4	100.0	-	-	97.6	-	-	100.0	94.4	-	95.0	-	100.0	97.6	75.0	-	97.1	100.0	92.3	95.3	86.2	-	93.0	95.5
Buses	0	0	0	0	-	0	0	0	0	2	-	2	0	0	2	1	-	3	0	2	3	1	-	6	11
% Buses	-	0.0	0.0	-	-	0.0	-	-	0.0	5.6	-	5.0	-	0.0	1.2	25.0	-	1.7	0.0	7.7	3.5	3.4	-	4.2	2.8
Single-Unit Trucks	0	1	0	0	-	1	0	0	0	0	-	0	0	0	1	0	-	1	0	0	1	1	-	2	4
% Single-Unit Trucks	-	2.6	0.0	-	-	2.4	-	-	0.0	0.0	-	0.0	-	0.0	0.6	0.0	-	0.6	0.0	0.0	1.2	3.4	-	1.4	1.0
Articulated Trucks	0	0	0	0	-	0	0	0	0	0	-	0	0	0	0	0	-	0	0	0	0	0	-	0	0
% Articulated Trucks	-	0.0	0.0	-	-	0.0	-	-	0.0	0.0	-	0.0	-	0.0	0.0	0.0	-	0.0	0.0	0.0	0.0	0.0	-	0.0	0.0
Bicycles on Road	0	0	0	0	-	0	0	0	0	0	-	0	0	0	1	0	-	1	0	0	0	2	-	2	3
% Bicycles on Road	-	0.0	0.0	-	-	0.0	-	-	0.0	0.0	-	0.0	-	0.0	0.6	0.0	-	0.6	0.0	0.0	0.0	6.9	-	1.4	0.8
Pedestrians	-	-	-	-	1	-	-	-	-	-	0	-	-	-	-	-	0	-	-	-	-	-	0	-	-
% Pedestrians	-	-	-	-	100.0	-	-	-	-	-	-	-	-	-	-	-	-	-	-	-	-	-	-	-	-

Kenig Lindgren O'Hara Aboona, Inc.
9575 W. Higgins Rd., Suite 400

Rosemont, Illinois, United States 60018
(847)518-9990 sainkeshavarzi@kloainc.com

Count Name: 87th St with County Ling Rd
Site Code:
Start Date: 08/30/2022

Turning Movement Peak Hour Data (4:00 PM)

Start Time	87th St Eastbound						87th St Westbound						County Ling Rd Northbound						County Ling Rd Southbound						Int. Total
	U-Turn	Left	Thru	Right	Peds	App. Total	U-Turn	Left	Thru	Right	Peds	App. Total	U-Turn	Left	Thru	Right	Peds	App. Total	U-Turn	Left	Thru	Right	Peds	App. Total	
4:00 PM	0	7	1	5	0	13	0	2	1	11	0	14	0	2	42	0	0	44	0	15	50	14	0	79	150
4:15 PM	0	2	0	0	0	2	1	0	1	9	2	11	0	1	35	1	0	37	0	12	52	7	3	71	121
4:30 PM	0	12	1	1	0	14	0	1	2	12	2	15	0	0	41	1	0	42	0	11	36	7	0	54	125
4:45 PM	0	8	1	1	0	10	0	2	0	8	0	10	0	1	34	0	0	35	0	6	53	6	0	65	120
Total	0	29	3	7	0	39	1	5	4	40	4	50	0	4	152	2	0	158	0	44	191	34	3	269	516
Approach %	0.0	74.4	7.7	17.9	-	-	2.0	10.0	8.0	80.0	-	-	0.0	2.5	96.2	1.3	-	-	0.0	16.4	71.0	12.6	-	-	-
Total %	0.0	5.6	0.6	1.4	-	7.6	0.2	1.0	0.8	7.8	-	9.7	0.0	0.8	29.5	0.4	-	30.6	0.0	8.5	37.0	6.6	-	52.1	-
PHF	0.000	0.604	0.750	0.350	-	0.696	0.250	0.625	0.500	0.833	-	0.833	0.000	0.500	0.905	0.500	-	0.898	0.000	0.733	0.901	0.607	-	0.851	0.860
Lights	0	29	3	5	-	37	1	3	4	39	-	47	0	3	145	1	-	149	0	41	150	32	-	223	456
% Lights	-	100.0	100.0	71.4	-	94.9	100.0	60.0	100.0	97.5	-	94.0	-	75.0	95.4	50.0	-	94.3	-	93.2	78.5	94.1	-	82.9	88.4
Buses	0	0	0	1	-	1	0	2	0	1	-	3	0	0	2	0	-	2	0	2	36	1	-	39	45
% Buses	-	0.0	0.0	14.3	-	2.6	0.0	40.0	0.0	2.5	-	6.0	-	0.0	1.3	0.0	-	1.3	-	4.5	18.8	2.9	-	14.5	8.7
Single-Unit Trucks	0	0	0	1	-	1	0	0	0	0	-	0	0	1	5	1	-	7	0	1	2	1	-	4	12
% Single-Unit Trucks	-	0.0	0.0	14.3	-	2.6	0.0	0.0	0.0	0.0	-	0.0	-	25.0	3.3	50.0	-	4.4	-	2.3	1.0	2.9	-	1.5	2.3
Articulated Trucks	0	0	0	0	-	0	0	0	0	0	-	0	0	0	0	0	-	0	0	0	3	0	-	3	3
% Articulated Trucks	-	0.0	0.0	0.0	-	0.0	0.0	0.0	0.0	0.0	-	0.0	-	0.0	0.0	0.0	-	0.0	-	0.0	1.6	0.0	-	1.1	0.6
Bicycles on Road	0	0	0	0	-	0	0	0	0	0	-	0	0	0	0	0	-	0	0	0	0	0	-	0	0
% Bicycles on Road	-	0.0	0.0	0.0	-	0.0	0.0	0.0	0.0	0.0	-	0.0	-	0.0	0.0	0.0	-	0.0	-	0.0	0.0	0.0	-	0.0	0.0
Pedestrians	-	-	-	-	0	-	-	-	-	-	4	-	-	-	-	-	0	-	-	-	-	-	3	-	-
% Pedestrians	-	-	-	-	-	-	-	-	-	-	100.0	-	-	-	-	-	-	-	-	-	-	-	100.0	-	-

Kenig Lindgren O'Hara Aboona, Inc.
9575 W. Higgins Rd., Suite 400

Rosemont, Illinois, United States 60018
(847)518-9990 sainkeshavarzi@kloainc.com

Count Name: 87th St with Johnston Rd
Site Code:
Start Date: 08/30/2022

Turning Movement Data

Start Time	87th St Eastbound						87th St Westbound						Johnston Rd Northbound						Johnston Rd Southbound						Int. Total
	U-Turn	Left	Thru	Right	Peds	App. Total	U-Turn	Left	Thru	Right	Peds	App. Total	U-Turn	Left	Thru	Right	Peds	App. Total	U-Turn	Left	Thru	Right	Peds	App. Total	
7:00 AM	0	3	3	1	0	7	0	0	1	0	0	1	0	4	0	0	0	4	0	0	0	6	0	6	18
7:15 AM	0	1	2	1	0	4	0	0	1	2	0	3	0	7	0	0	0	7	0	0	0	8	0	8	22
7:30 AM	0	4	2	0	0	6	0	0	4	0	0	4	0	0	1	0	0	1	0	0	0	3	0	3	14
7:45 AM	1	7	1	2	0	11	0	0	1	1	0	2	0	0	0	0	0	0	0	0	1	10	0	11	24
Hourly Total	1	15	8	4	0	28	0	0	7	3	0	10	0	11	1	0	0	12	0	0	1	27	0	28	78
8:00 AM	0	2	3	1	0	6	0	0	2	0	0	2	0	2	0	0	0	2	0	0	0	7	0	7	17
8:15 AM	0	2	1	4	0	7	0	0	1	0	0	1	0	1	1	0	0	2	0	0	1	7	0	8	18
8:30 AM	0	5	2	1	0	8	0	0	0	0	0	0	0	2	1	0	0	3	1	0	1	5	0	7	18
8:45 AM	0	8	0	1	0	9	0	0	0	0	0	0	0	2	0	0	0	2	1	0	0	6	1	7	18
Hourly Total	0	17	6	7	0	30	0	0	3	0	0	3	0	7	2	0	0	9	2	0	2	25	1	29	71
*** BREAK ***	-	-	-	-	-	-	-	-	-	-	-	-	-	-	-	-	-	-	-	-	-	-	-	-	-
4:00 PM	1	12	2	2	0	17	0	0	1	1	0	2	0	2	0	1	0	3	0	1	0	11	0	12	34
4:15 PM	2	8	3	1	0	14	0	0	1	1	0	2	0	0	0	0	0	0	0	0	0	8	0	8	24
4:30 PM	1	8	0	4	0	13	0	0	3	0	0	3	0	2	0	0	0	2	0	0	0	7	0	7	25
4:45 PM	0	5	1	2	0	8	0	0	1	1	0	2	0	2	0	1	0	3	0	0	0	9	0	9	22
Hourly Total	4	33	6	9	0	52	0	0	6	3	0	9	0	6	0	2	0	8	0	1	0	35	0	36	105
5:00 PM	0	3	1	5	0	9	0	0	1	0	0	1	0	4	0	0	0	4	0	0	0	5	0	5	19
5:15 PM	0	8	3	3	0	14	0	0	4	0	0	4	0	3	0	0	0	3	0	0	0	5	0	5	26
5:30 PM	0	7	3	1	0	11	0	0	0	0	0	0	0	1	0	0	0	1	0	0	0	6	0	6	18
5:45 PM	0	8	2	1	0	11	0	0	2	0	0	2	0	0	1	0	0	1	0	0	0	3	0	3	17
Hourly Total	0	26	9	10	0	45	0	0	7	0	0	7	0	8	1	0	0	9	0	0	0	19	0	19	80
Grand Total	5	91	29	30	0	155	0	0	23	6	0	29	0	32	4	2	0	38	2	1	3	106	1	112	334
Approach %	3.2	58.7	18.7	19.4	-	-	0.0	0.0	79.3	20.7	-	-	0.0	84.2	10.5	5.3	-	-	1.8	0.9	2.7	94.6	-	-	-
Total %	1.5	27.2	8.7	9.0	-	46.4	0.0	0.0	6.9	1.8	-	8.7	0.0	9.6	1.2	0.6	-	11.4	0.6	0.3	0.9	31.7	-	33.5	-
Lights	5	83	28	29	-	145	0	0	22	4	-	26	0	31	4	1	-	36	2	0	2	98	-	102	309
% Lights	100.0	91.2	96.6	96.7	-	93.5	-	-	95.7	66.7	-	89.7	-	96.9	100.0	50.0	-	94.7	100.0	0.0	66.7	92.5	-	91.1	92.5
Buses	0	6	0	0	-	6	0	0	1	0	-	1	0	0	0	0	-	0	0	1	0	6	-	7	14
% Buses	0.0	6.6	0.0	0.0	-	3.9	-	-	4.3	0.0	-	3.4	-	0.0	0.0	0.0	-	0.0	0.0	100.0	0.0	5.7	-	6.3	4.2
Single-Unit Trucks	0	1	1	1	-	3	0	0	0	2	-	2	0	1	0	1	-	2	0	0	0	2	-	2	9
% Single-Unit Trucks	0.0	1.1	3.4	3.3	-	1.9	-	-	0.0	33.3	-	6.9	-	3.1	0.0	50.0	-	5.3	0.0	0.0	0.0	1.9	-	1.8	2.7
Articulated Trucks	0	0	0	0	-	0	0	0	0	0	-	0	0	0	0	0	-	0	0	0	0	0	-	0	0
% Articulated Trucks	0.0	0.0	0.0	0.0	-	0.0	-	-	0.0	0.0	-	0.0	-	0.0	0.0	0.0	-	0.0	0.0	0.0	0.0	0.0	-	0.0	0.0
Bicycles on Road	0	1	0	0	-	1	0	0	0	0	-	0	0	0	0	0	-	0	0	0	1	0	-	1	2

% Bicycles on Road	0.0	1.1	0.0	0.0	-	0.6	-	-	0.0	0.0	-	0.0	-	0.0	0.0	0.0	-	0.0	0.0	0.0	33.3	0.0	-	0.9	0.6
Pedestrians	-	-	-	-	0	-	-	-	-	-	0	-	-	-	-	-	0	-	-	-	-	-	1	-	-
% Pedestrians	-	-	-	-	-	-	-	-	-	-	-	-	-	-	-	-	-	-	-	-	-	-	100.0	-	-

Kenig Lindgren O'Hara Aboona, Inc.
9575 W. Higgins Rd., Suite 400

Rosemont, Illinois, United States 60018
(847)518-9990 sainkeshavarzi@kloainc.com

Count Name: 87th St with Johnston Rd
Site Code:
Start Date: 08/30/2022

Turning Movement Peak Hour Data (7:45 AM)

Start Time	87th St Eastbound						87th St Westbound						Johnston Rd Northbound						Johnston Rd Southbound						Int. Total
	U-Turn	Left	Thru	Right	Peds	App. Total	U-Turn	Left	Thru	Right	Peds	App. Total	U-Turn	Left	Thru	Right	Peds	App. Total	U-Turn	Left	Thru	Right	Peds	App. Total	
7:45 AM	1	7	1	2	0	11	0	0	1	1	0	2	0	0	0	0	0	0	0	0	1	10	0	11	24
8:00 AM	0	2	3	1	0	6	0	0	2	0	0	2	0	2	0	0	0	2	0	0	0	7	0	7	17
8:15 AM	0	2	1	4	0	7	0	0	1	0	0	1	0	1	1	0	0	2	0	0	1	7	0	8	18
8:30 AM	0	5	2	1	0	8	0	0	0	0	0	0	0	2	1	0	0	3	1	0	1	5	0	7	18
Total	1	16	7	8	0	32	0	0	4	1	0	5	0	5	2	0	0	7	1	0	3	29	0	33	77
Approach %	3.1	50.0	21.9	25.0	-	-	0.0	0.0	80.0	20.0	-	-	0.0	71.4	28.6	0.0	-	-	3.0	0.0	9.1	87.9	-	-	-
Total %	1.3	20.8	9.1	10.4	-	41.6	0.0	0.0	5.2	1.3	-	6.5	0.0	6.5	2.6	0.0	-	9.1	1.3	0.0	3.9	37.7	-	42.9	-
PHF	0.250	0.571	0.583	0.500	-	0.727	0.000	0.000	0.500	0.250	-	0.625	0.000	0.625	0.500	0.000	-	0.583	0.250	0.000	0.750	0.725	-	0.750	0.802
Lights	1	13	7	8	-	29	0	0	4	1	-	5	0	5	2	0	-	7	1	0	2	26	-	29	70
% Lights	100.0	81.3	100.0	100.0	-	90.6	-	-	100.0	100.0	-	100.0	-	100.0	100.0	-	-	100.0	100.0	-	66.7	89.7	-	87.9	90.9
Buses	0	3	0	0	-	3	0	0	0	0	-	0	0	0	0	0	-	0	0	0	0	3	-	3	6
% Buses	0.0	18.8	0.0	0.0	-	9.4	-	-	0.0	0.0	-	0.0	-	0.0	0.0	-	-	0.0	0.0	-	0.0	10.3	-	9.1	7.8
Single-Unit Trucks	0	0	0	0	-	0	0	0	0	0	-	0	0	0	0	0	-	0	0	0	0	0	-	0	0
% Single-Unit Trucks	0.0	0.0	0.0	0.0	-	0.0	-	-	0.0	0.0	-	0.0	-	0.0	0.0	-	-	0.0	0.0	-	0.0	0.0	-	0.0	0.0
Articulated Trucks	0	0	0	0	-	0	0	0	0	0	-	0	0	0	0	0	-	0	0	0	0	0	-	0	0
% Articulated Trucks	0.0	0.0	0.0	0.0	-	0.0	-	-	0.0	0.0	-	0.0	-	0.0	0.0	-	-	0.0	0.0	-	0.0	0.0	-	0.0	0.0
Bicycles on Road	0	0	0	0	-	0	0	0	0	0	-	0	0	0	0	0	-	0	0	0	1	0	-	1	1
% Bicycles on Road	0.0	0.0	0.0	0.0	-	0.0	-	-	0.0	0.0	-	0.0	-	0.0	0.0	-	-	0.0	0.0	-	33.3	0.0	-	3.0	1.3
Pedestrians	-	-	-	-	0	-	-	-	-	-	0	-	-	-	-	-	0	-	-	-	-	-	0	-	-
% Pedestrians	-	-	-	-	-	-	-	-	-	-	-	-	-	-	-	-	-	-	-	-	-	-	-	-	-

Kenig Lindgren O'Hara Aboona, Inc.
9575 W. Higgins Rd., Suite 400

Rosemont, Illinois, United States 60018
(847)518-9990 sainkeshavarzi@kloainc.com

Count Name: 87th St with Johnston Rd
Site Code:
Start Date: 08/30/2022

Turning Movement Peak Hour Data (4:00 PM)

Start Time	87th St Eastbound						87th St Westbound						Johnston Rd Northbound						Johnston Rd Southbound						Int. Total
	U-Turn	Left	Thru	Right	Peds	App. Total	U-Turn	Left	Thru	Right	Peds	App. Total	U-Turn	Left	Thru	Right	Peds	App. Total	U-Turn	Left	Thru	Right	Peds	App. Total	
4:00 PM	1	12	2	2	0	17	0	0	1	1	0	2	0	2	0	1	0	3	0	1	0	11	0	12	34
4:15 PM	2	8	3	1	0	14	0	0	1	1	0	2	0	0	0	0	0	0	0	0	0	8	0	8	24
4:30 PM	1	8	0	4	0	13	0	0	3	0	0	3	0	2	0	0	0	2	0	0	0	7	0	7	25
4:45 PM	0	5	1	2	0	8	0	0	1	1	0	2	0	2	0	1	0	3	0	0	0	9	0	9	22
Total	4	33	6	9	0	52	0	0	6	3	0	9	0	6	0	2	0	8	0	1	0	35	0	36	105
Approach %	7.7	63.5	11.5	17.3	-	-	0.0	0.0	66.7	33.3	-	-	0.0	75.0	0.0	25.0	-	-	0.0	2.8	0.0	97.2	-	-	-
Total %	3.8	31.4	5.7	8.6	-	49.5	0.0	0.0	5.7	2.9	-	8.6	0.0	5.7	0.0	1.9	-	7.6	0.0	1.0	0.0	33.3	-	34.3	-
PHF	0.500	0.688	0.500	0.563	-	0.765	0.000	0.000	0.500	0.750	-	0.750	0.000	0.750	0.000	0.500	-	0.667	0.000	0.250	0.000	0.795	-	0.750	0.772
Lights	4	30	6	8	-	48	0	0	5	2	-	7	0	6	0	1	-	7	0	0	0	32	-	32	94
% Lights	100.0	90.9	100.0	88.9	-	92.3	-	-	83.3	66.7	-	77.8	-	100.0	-	50.0	-	87.5	-	0.0	-	91.4	-	88.9	89.5
Buses	0	2	0	0	-	2	0	0	1	0	-	1	0	0	0	0	-	0	0	1	0	2	-	3	6
% Buses	0.0	6.1	0.0	0.0	-	3.8	-	-	16.7	0.0	-	11.1	-	0.0	-	0.0	-	0.0	-	100.0	-	5.7	-	8.3	5.7
Single-Unit Trucks	0	0	0	1	-	1	0	0	0	1	-	1	0	0	0	1	-	1	0	0	0	1	-	1	4
% Single-Unit Trucks	0.0	0.0	0.0	11.1	-	1.9	-	-	0.0	33.3	-	11.1	-	0.0	-	50.0	-	12.5	-	0.0	-	2.9	-	2.8	3.8
Articulated Trucks	0	0	0	0	-	0	0	0	0	0	-	0	0	0	0	0	-	0	0	0	0	0	-	0	0
% Articulated Trucks	0.0	0.0	0.0	0.0	-	0.0	-	-	0.0	0.0	-	0.0	-	0.0	-	0.0	-	0.0	-	0.0	-	0.0	-	0.0	0.0
Bicycles on Road	0	1	0	0	-	1	0	0	0	0	-	0	0	0	0	0	-	0	0	0	0	0	-	0	1
% Bicycles on Road	0.0	3.0	0.0	0.0	-	1.9	-	-	0.0	0.0	-	0.0	-	0.0	-	0.0	-	0.0	-	0.0	-	0.0	-	0.0	1.0
Pedestrians	-	-	-	-	0	-	-	-	-	-	0	-	-	-	-	-	0	-	-	-	-	-	0	-	-
% Pedestrians	-	-	-	-	-	-	-	-	-	-	-	-	-	-	-	-	-	-	-	-	-	-	-	-	-

Site Plan

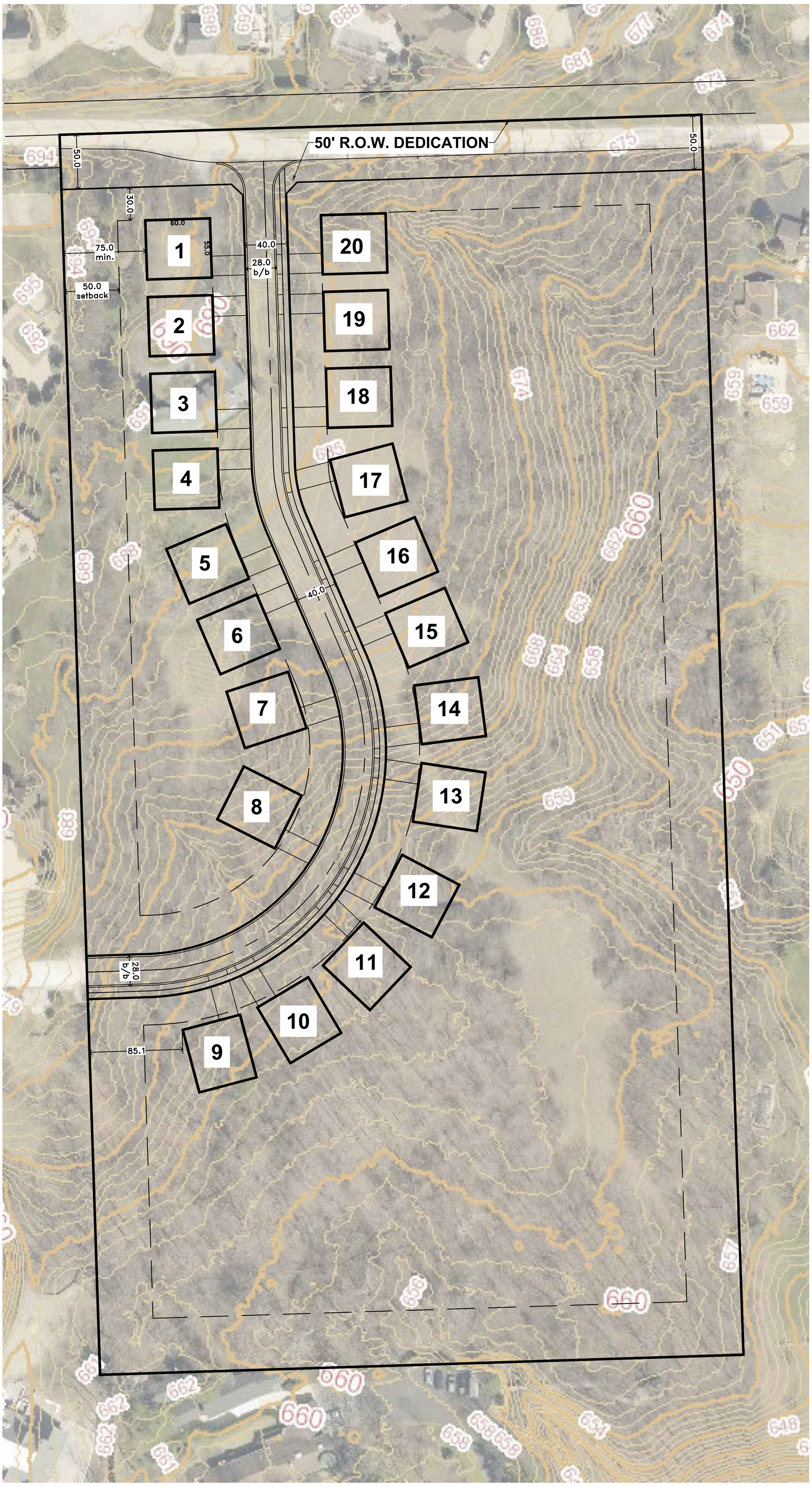

SITE PLAN DATA

TOTAL AREA	15.2 Acres (+/-)
PROPOSED ZONING	P.U.D.
ROADWAY DEDICATION (87th St.)	0.7 Acres (+/-)
TOTAL HOMES:	20

BUILDING SETBACK	
Property Line	50'
Front Yard	30'
Side to Side	15'
Rear to Side	60'

NORTH

0' 25' 50' 100'

This plan was prepared to illustrate the development potential for the site. As a Site Plan, it is conceptual in nature. Therefore, all dimensions are subject to verification and the Site Plan is subject to modification pending final planning, engineering, architecture and municipal approval.

McNaughton DEVELOPMENT, LLC
YOUR LUXURY HOME BUILDER

© Copyright 2020 all rights reserved. The design and any and all ideas contained herein are the sole property of Metz & Company. Any reproduction of the design or the concept embodied herein in any form, in whole or in part, without consent from Metz & Company is prohibited.

If this plan is not 24" x 36" in size, then it is a reproduction that may not be to scale

REVISIONS

1	ALTA Survey	6-1-2022
2	87th Street Right-of-way	6-2-2022
3	Client Review	6-9-2022
4	R-2B Zoning Site Plan	7-19-2022
5	SF Cluster Site Plan	7-21-2022

15-ACRE BURR RIDGE

11731 W. 87th STREET
BURR RIDGE, ILLINOIS

SEAL:

METZ & COMPANY
LANDSCAPE ARCHITECTURE/SITE PLANNING
826 East Maple Street
Lombard, Illinois 60148
PH: 630.561.3903
www.metz-company.com

TITLE
CONCEPTUAL SITE PLAN

PROJECT NO.: 21-171
DATE: 09-09-2021
SCALE: 1"=50'

SHEET
SP-1

ITE Trip Generation Summary Sheets

Land Use: 210
Single-Family Detached Housing

Description

A single-family detached housing site includes any single-family detached home on an individual lot. A typical site surveyed is a suburban subdivision.

Specialized Land Use

Data have been submitted for several single-family detached housing developments with homes that are commonly referred to as patio homes. A patio home is a detached housing unit that is located on a small lot with little (or no) front or back yard. In some subdivisions, communal maintenance of outside grounds is provided for the patio homes. The three patio home sites total 299 dwelling units with overall weighted average trip generation rates of 5.35 vehicle trips per dwelling unit for weekday, 0.26 for the AM adjacent street peak hour, and 0.47 for the PM adjacent street peak hour. These patio home rates based on a small sample of sites are lower than those for single-family detached housing (Land Use 210), lower than those for single-family attached housing (Land Use 251), and higher than those for senior adult housing -- single-family (Land Use 251). Further analysis of this housing type will be conducted in a future edition of *Trip Generation Manual*.

Additional Data

The technical appendices provide supporting information on time-of-day distributions for this land use. The appendices can be accessed through either the ITETripGen web app or the trip generation resource page on the ITE website (https://www.ite.org/technical-resources/topics/trip-and-parking-generation/).

For 30 of the study sites, data on the number of residents and number of household vehicles are available. The overall averages for the 30 sites are 3.6 residents per dwelling unit and 1.5 vehicles per dwelling unit.

The sites were surveyed in the 1980s, the 1990s, the 2000s, and the 2010s in Arizona, California, Connecticut, Delaware, Illinois, Indiana, Kentucky, Maryland, Massachusetts, Minnesota, Montana, New Jersey, North Carolina, Ohio, Ontario (CAN), Oregon, Pennsylvania, South Carolina, South Dakota, Tennessee, Vermont, Virginia, and West Virginia.

Source Numbers

100, 105, 114, 126, 157, 167, 177, 197, 207, 211, 217, 267, 275, 293, 300, 319, 320, 356, 357, 367, 384, 387, 407, 435, 522, 550, 552, 579, 598, 601, 603, 614, 637, 711, 716, 720, 728, 735, 868, 869, 903, 925, 936, 1005, 1007, 1008, 1010, 1033, 1066, 1077,1078, 1079

Single-Family Detached Housing
(210)

Vehicle Trip Ends vs: Dwelling Units
On a: Weekday

Setting/Location: General Urban/Suburban
Number of Studies: 174
Avg. Num. of Dwelling Units: 246
Directional Distribution: 50% entering, 50% exiting

Vehicle Trip Generation per Dwelling Unit

Average Rate	Range of Rates	Standard Deviation
9.43	4.45 - 22.61	2.13

Data Plot and Equation

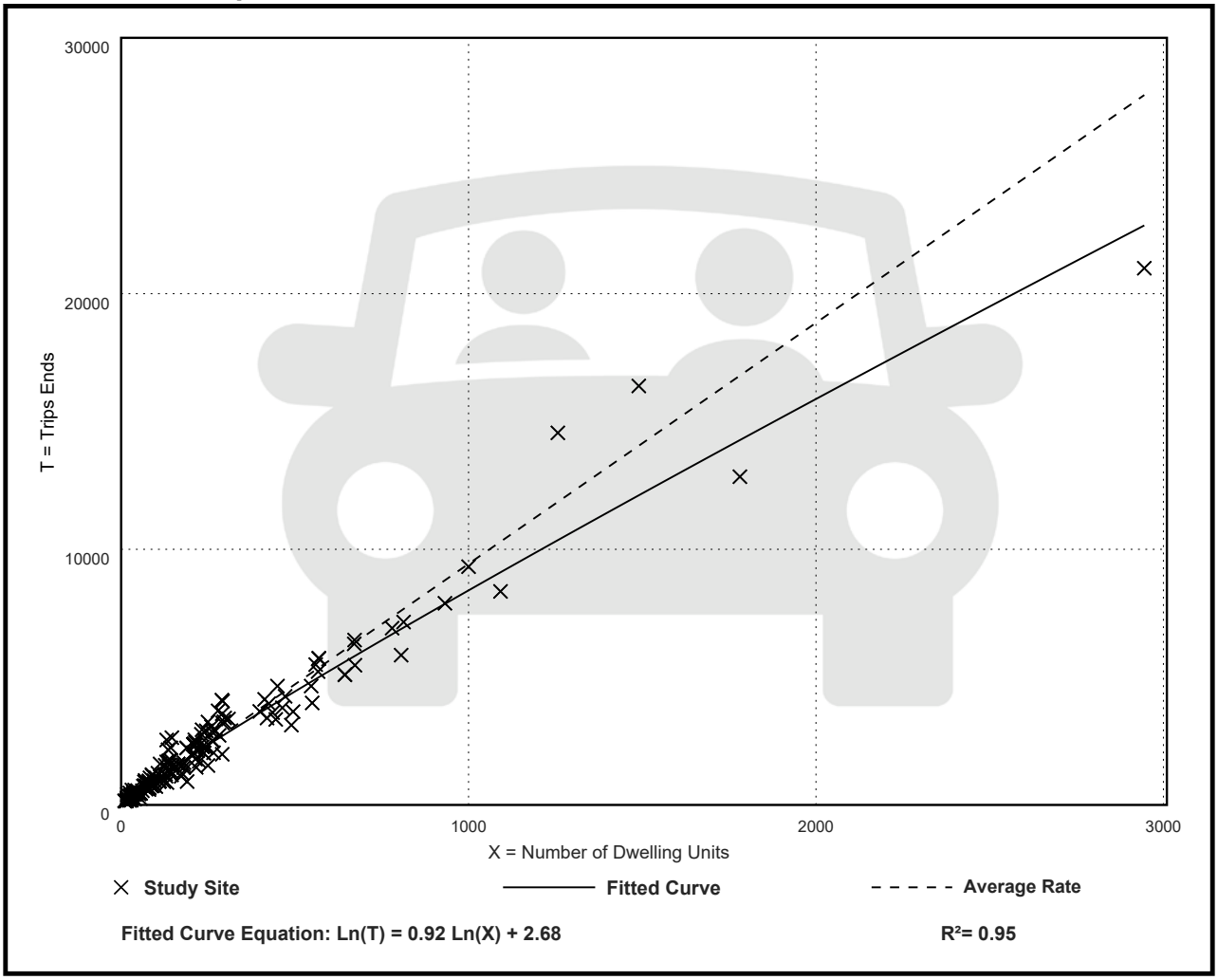

Fitted Curve Equation: Ln(T) = 0.92 Ln(X) + 2.68

R^2= 0.95

Single-Family Detached Housing
(210)

Vehicle Trip Ends vs: Dwelling Units
On a: Weekday,
Peak Hour of Adjacent Street Traffic,
One Hour Between 7 and 9 a.m.
Setting/Location: General Urban/Suburban
Number of Studies: 192
Avg. Num. of Dwelling Units: 226
Directional Distribution: 26% entering, 74% exiting

Vehicle Trip Generation per Dwelling Unit

Average Rate	Range of Rates	Standard Deviation
0.70	0.27 - 2.27	0.24

Data Plot and Equation

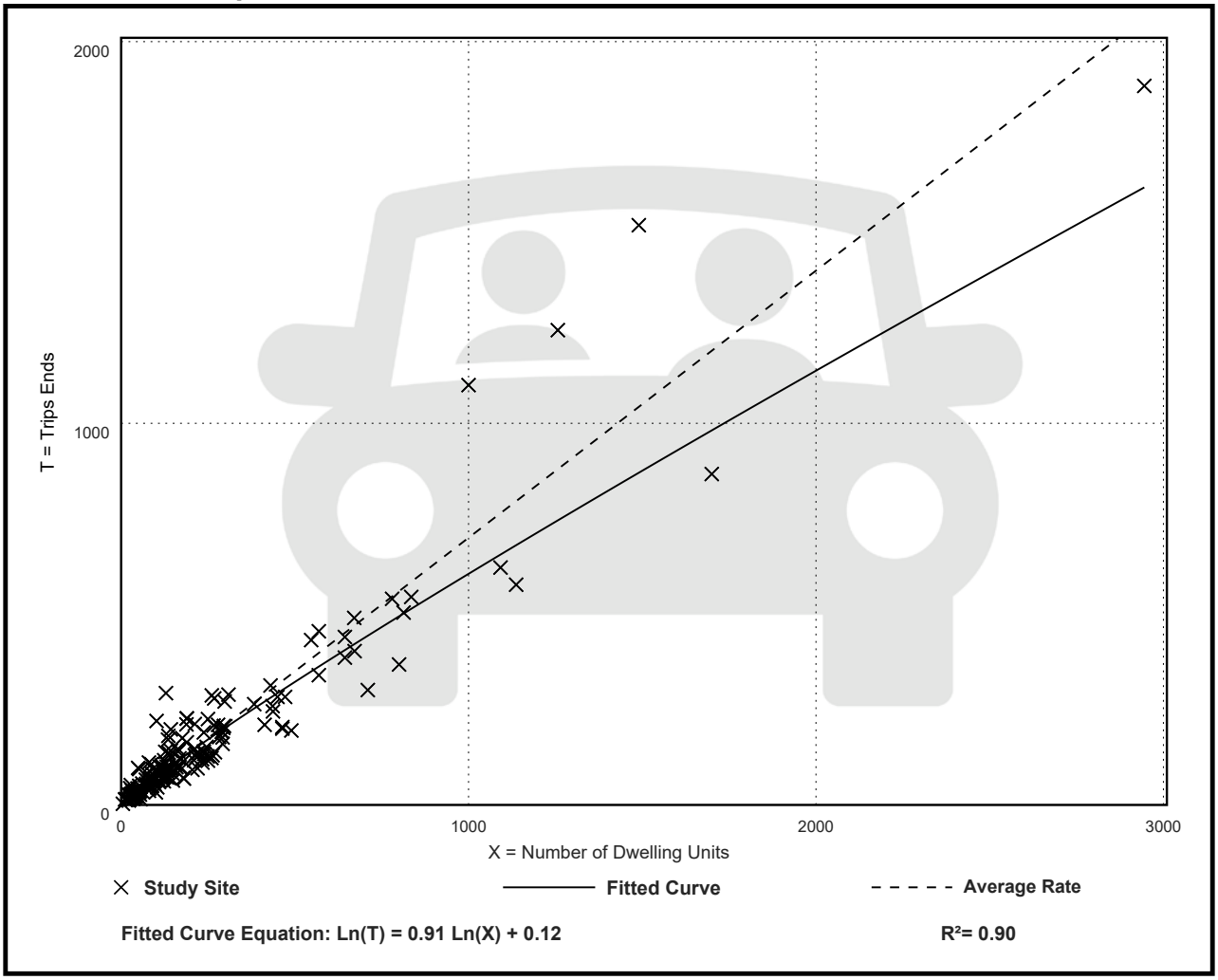

Single-Family Detached Housing
(210)

Vehicle Trip Ends vs: Dwelling Units
On a: Weekday,
Peak Hour of Adjacent Street Traffic,
One Hour Between 4 and 6 p.m.
Setting/Location: General Urban/Suburban
Number of Studies: 208
Avg. Num. of Dwelling Units: 248
Directional Distribution: 63% entering, 37% exiting

Vehicle Trip Generation per Dwelling Unit

Average Rate	Range of Rates	Standard Deviation
0.94	0.35 - 2.98	0.31

Data Plot and Equation

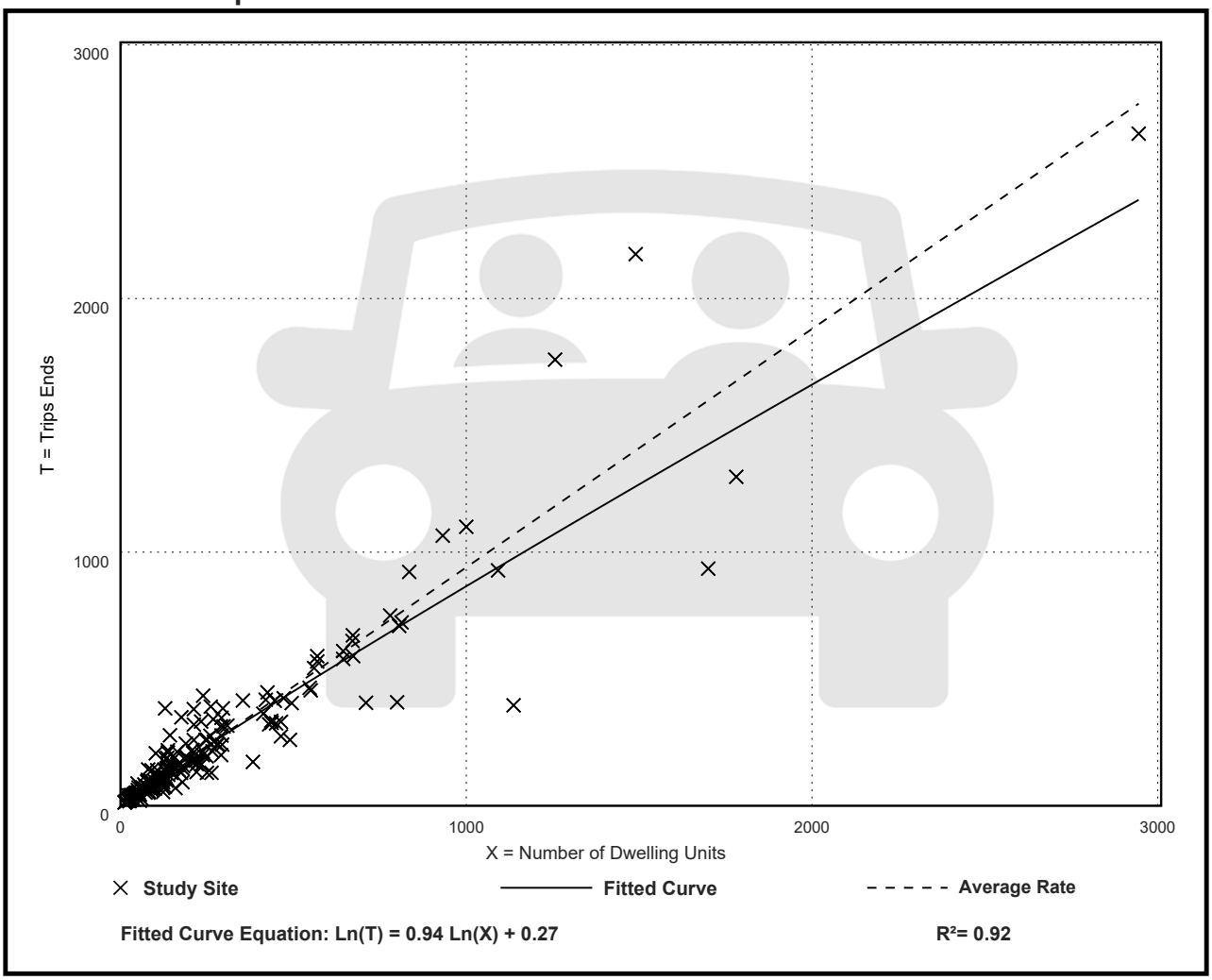

CMAP 2050 Projections Letter

Chicago Metropolitan Agency for Planning

433 West Van Buren Street
Suite 450
Chicago, IL 60607

312-454-0400
cmap.illinois.gov

August 31, 2022

Shahrzad Ainkeshavarzi
Traffic Engineer
Kenig, Lindgren, O'Hara, Aboona, Inc.
9575 West Higgins Road
Suite 400
Rosemont, IL 60018

Subject: ***County Line Road @ 87th Street***
IDOT

Dear Ms. Ainkeshavarzi:

In response to a request made on your behalf and dated August 30, 2022, we have developed year 2050 average daily traffic (ADT) projections for the subject location.

ROAD SEGMENT	Current ADT	Year 2050 ADT
County Line Rd north of 87th St	5,200	5,700
County Line Rd south of 87th St	3,200	3,500

Traffic projections are developed using existing ADT data provided in the request letter and the results from the December 2021 CMAP Travel Demand Analysis. The regional travel model uses CMAP 2050 socioeconomic projections and assumes the implementation of the ON TO 2050 Comprehensive Regional Plan for the Northeastern Illinois area. The provision of this data in support of your request does not constitute a CMAP endorsement of the proposed development or any subsequent developments.

If you have any questions, please call me at (312) 386-8806.

Sincerely,

Jose Rodriguez, PTP, AICP
Senior Planner, Research & Analysis

cc: Rios (IDOT)
S:\AdminGroups\ResearchAnalysis\2022_ForecastTraffic\BALANCE CY22 TRAFFIC FORECAST RECORD.docx

Level of Service Criteria

LEVEL OF SERVICE CRITERIA

Signalized Intersections		
Level of Service	Interpretation	Average Control Delay (seconds per vehicle)
A	Favorable progression. Most vehicles arrive during the green indication and travel through the intersection without stopping.	≤10
B	Good progression, with more vehicles stopping than for Level of Service A.	>10 - 20
C	Individual cycle failures (i.e., one or more queued vehicles are not able to depart as a result of insufficient capacity during the cycle) may begin to appear. Number of vehicles stopping is significant, although many vehicles still pass through the intersection without stopping.	>20 - 35
D	The volume-to-capacity ratio is high and either progression is ineffective, or the cycle length is too long. Many vehicles stop and individual cycle failures are noticeable.	>35 - 55
E	Progression is unfavorable. The volume-to-capacity ratio is high, and the cycle length is long. Individual cycle failures are frequent.	>55 - 80
F	The volume-to-capacity ratio is very high, progression is very poor, and the cycle length is long. Most cycles fail to clear the queue.	>80.0

Unsignalized Intersections	
Level of Service	Average Total Delay (SEC/VEH)
A	0 - 10
B	> 10 - 15
C	> 15 - 25
D	> 25 - 35
E	> 35 - 50
F	> 50

Source: *Highway Capacity Manual*, 2010.

Capacity Analysis Summary Sheets

Existing Weekday Morning Peak Hour

Intersection	
Intersection Delay, s/veh	3.1
Intersection LOS	A

Approach	EB	WB	NB	SB
Entry Lanes	1	1	1	1
Conflicting Circle Lanes	1	1	1	1
Adj Approach Flow, veh/h	41	9	8	41
Demand Flow Rate, veh/h	45	9	8	45
Vehicles Circulating, veh/h	5	33	36	14
Vehicles Exiting, veh/h	54	11	14	28
Ped Vol Crossing Leg, #/h	0	0	0	0
Ped Cap Adj	1.000	1.000	1.000	1.000
Approach Delay, s/veh	3.1	2.8	2.8	3.2
Approach LOS	A	A	A	A

Lane	Left	Left	Left	Left
Designated Moves	LTR	LTR	LTR	LTR
Assumed Moves	LTR	LTR	LTR	LTR
RT Channelized				
Lane Util	1.000	1.000	1.000	1.000
Follow-Up Headway, s	2.609	2.609	2.609	2.609
Critical Headway, s	4.976	4.976	4.976	4.976
Entry Flow, veh/h	45	9	8	45
Cap Entry Lane, veh/h	1373	1334	1330	1360
Entry HV Adj Factor	0.911	1.000	1.000	0.911
Flow Entry, veh/h	41	9	8	41
Cap Entry, veh/h	1251	1334	1330	1239
V/C Ratio	0.033	0.007	0.006	0.033
Control Delay, s/veh	3.1	2.8	2.8	3.2
LOS	A	A	A	A
95th %tile Queue, veh	0	0	0	0

Intersection	
Int Delay, s/veh	2.8

Movement	EBL	EBT	EBR	WBL	WBT	WBR	NBL	NBT	NBR	SBL	SBT	SBR
Lane Configurations												
Traffic Vol, veh/h	39	2	0	0	4	36	2	168	4	27	86	29
Future Vol, veh/h	39	2	0	0	4	36	2	168	4	27	86	29
Conflicting Peds, #/hr	0	0	0	0	0	0	0	0	0	0	0	0
Sign Control	Stop	Stop	Stop	Stop	Stop	Stop	Free	Free	Free	Free	Free	Free
RT Channelized	-	-	None	-	-	None	-	-	None	-	-	None
Storage Length	-	-	-	-	-	0	140	-	-	210	-	-
Veh in Median Storage, #	-	0	-	-	0	-	-	0	-	-	0	-
Grade, %	-	0	-	-	0	-	-	0	-	-	0	-
Peak Hour Factor	95	95	95	95	95	95	95	95	95	95	95	95
Heavy Vehicles, %	3	0	0	0	0	6	0	2	25	7	5	7
Mvmt Flow	41	2	0	0	4	38	2	177	4	28	91	31

Major/Minor	Minor2			Minor1			Major1			Major2		
Conflicting Flow All	367	348	107	347	361	179	122	0	0	181	0	0
Stage 1	163	163	-	183	183	-	-	-	-	-	-	-
Stage 2	204	185	-	164	178	-	-	-	-	-	-	-
Critical Hdwy	7.13	6.5	6.2	7.1	6.5	6.26	4.1	-	-	4.17	-	-
Critical Hdwy Stg 1	6.13	5.5	-	6.1	5.5	-	-	-	-	-	-	-
Critical Hdwy Stg 2	6.13	5.5	-	6.1	5.5	-	-	-	-	-	-	-
Follow-up Hdwy	3.527	4	3.3	3.5	4	3.354	2.2	-	-	2.263	-	-
Pot Cap-1 Maneuver	587	579	953	611	569	854	1478	-	-	1365	-	-
Stage 1	837	767	-	823	752	-	-	-	-	-	-	-
Stage 2	796	751	-	843	756	-	-	-	-	-	-	-
Platoon blocked, %								-	-		-	-
Mov Cap-1 Maneuver	548	566	953	599	556	854	1478	-	-	1365	-	-
Mov Cap-2 Maneuver	548	566	-	599	556	-	-	-	-	-	-	-
Stage 1	836	751	-	822	751	-	-	-	-	-	-	-
Stage 2	755	750	-	823	740	-	-	-	-	-	-	-

Approach	EB	WB	NB	SB
HCM Control Delay, s	12.1	9.6	0.1	1.5
HCM LOS	B	A		

Minor Lane/Major Mvmt	NBL	NBT	NBR	EBLn1	WBLn1	WBLn2	SBL	SBT	SBR
Capacity (veh/h)	1478	-	-	549	556	854	1365	-	-
HCM Lane V/C Ratio	0.001	-	-	0.079	0.008	0.044	0.021	-	-
HCM Control Delay (s)	7.4	-	-	12.1	11.5	9.4	7.7	-	-
HCM Lane LOS	A	-	-	B	B	A	A	-	-
HCM 95th %tile Q(veh)	0	-	-	0.3	0	0.1	0.1	-	-

Intersection	
Int Delay, s/veh	0

Movement	EBT	EBR	WBL	WBT	NBL	NBR
Lane Configurations						
Traffic Vol, veh/h	9	0	0	7	0	0
Future Vol, veh/h	9	0	0	7	0	0
Conflicting Peds, #/hr	0	0	0	0	0	0
Sign Control	Free	Free	Free	Free	Stop	Stop
RT Channelized	-	None	-	None	-	None
Storage Length	-	-	-	-	0	-
Veh in Median Storage, #	0	-	-	0	0	-
Grade, %	0	-	-	0	0	-
Peak Hour Factor	95	95	95	95	95	95
Heavy Vehicles, %	2	2	2	2	0	0
Mvmt Flow	9	0	0	7	0	0

Major/Minor	Major1		Major2		Minor1	
Conflicting Flow All	0	0	9	0	16	9
Stage 1	-	-	-	-	9	-
Stage 2	-	-	-	-	7	-
Critical Hdwy	-	-	4.12	-	6.4	6.2
Critical Hdwy Stg 1	-	-	-	-	5.4	-
Critical Hdwy Stg 2	-	-	-	-	5.4	-
Follow-up Hdwy	-	-	2.218	-	3.5	3.3
Pot Cap-1 Maneuver	-	-	1611	-	1008	1079
Stage 1	-	-	-	-	1019	-
Stage 2	-	-	-	-	1021	-
Platoon blocked, %	-	-		-		
Mov Cap-1 Maneuver	-	-	1611	-	1008	1079
Mov Cap-2 Maneuver	-	-	-	-	1008	-
Stage 1	-	-	-	-	1019	-
Stage 2	-	-	-	-	1021	-

Approach	EB	WB	NB
HCM Control Delay, s	0	0	0
HCM LOS			A

Minor Lane/Major Mvmt	NBLn1	EBT	EBR	WBL	WBT
Capacity (veh/h)	-	-	-	1611	-
HCM Lane V/C Ratio	-	-	-	-	-
HCM Control Delay (s)	0	-	-	0	-
HCM Lane LOS	A	-	-	A	-
HCM 95th %tile Q(veh)	-	-	-	0	-

Capacity Analysis Summary Sheets

Existing Weekday Evening Peak Hour

Intersection	
Intersection Delay, s/veh	3.2
Intersection LOS	A

Approach	EB	WB	NB	SB
Entry Lanes	1	1	1	1
Conflicting Circle Lanes	1	1	1	1
Adj Approach Flow, veh/h	68	16	11	46
Demand Flow Rate, veh/h	71	19	12	51
Vehicles Circulating, veh/h	2	58	60	22
Vehicles Exiting, veh/h	71	14	13	55
Ped Vol Crossing Leg, #/h	0	0	0	0
Ped Cap Adj	1.000	1.000	1.000	1.000
Approach Delay, s/veh	3.1	3.4	3.1	3.3
Approach LOS	A	A	A	A

Lane	Left	Left	Left	Left
Designated Moves	LTR	LTR	LTR	LTR
Assumed Moves	LTR	LTR	LTR	LTR
RT Channelized				
Lane Util	1.000	1.000	1.000	1.000
Follow-Up Headway, s	2.609	2.609	2.609	2.609
Critical Headway, s	4.976	4.976	4.976	4.976
Entry Flow, veh/h	71	19	12	51
Cap Entry Lane, veh/h	1377	1301	1298	1349
Entry HV Adj Factor	0.958	0.840	0.917	0.902
Flow Entry, veh/h	68	16	11	46
Cap Entry, veh/h	1319	1093	1190	1217
V/C Ratio	0.052	0.015	0.009	0.038
Control Delay, s/veh	3.1	3.4	3.1	3.3
LOS	A	A	A	A
95th %tile Queue, veh	0	0	0	0

Intersection	
Int Delay, s/veh	2.9

Movement	EBL	EBT	EBR	WBL	WBT	WBR	NBL	NBT	NBR	SBL	SBT	SBR
Lane Configurations												
Traffic Vol, veh/h	29	6	7	6	4	40	4	152	2	44	191	34
Future Vol, veh/h	29	6	7	6	4	40	4	152	2	44	191	34
Conflicting Peds, #/hr	0	0	0	0	0	0	0	0	0	0	0	0
Sign Control	Stop	Stop	Stop	Stop	Stop	Stop	Free	Free	Free	Free	Free	Free
RT Channelized	-	-	None	-	-	None	-	-	None	-	-	None
Storage Length	-	-	-	-	-	0	140	-	-	210	-	-
Veh in Median Storage, #	-	0	-	-	0	-	-	0	-	-	0	-
Grade, %	-	0	-	-	0	-	-	0	-	-	0	-
Peak Hour Factor	86	86	86	86	86	86	86	86	86	86	86	86
Heavy Vehicles, %	0	0	29	33	0	3	25	5	50	7	21	6
Mvmt Flow	34	7	8	7	5	47	5	177	2	51	222	40

Major/Minor	Minor2			Minor1			Major1			Major2		
Conflicting Flow All	558	533	242	540	552	178	262	0	0	179	0	0
Stage 1	344	344	-	188	188	-	-	-	-	-	-	-
Stage 2	214	189	-	352	364	-	-	-	-	-	-	-
Critical Hdwy	7.1	6.5	6.49	7.43	6.5	6.23	4.35	-	-	4.17	-	-
Critical Hdwy Stg 1	6.1	5.5	-	6.43	5.5	-	-	-	-	-	-	-
Critical Hdwy Stg 2	6.1	5.5	-	6.43	5.5	-	-	-	-	-	-	-
Follow-up Hdwy	3.5	4	3.561	3.797	4	3.327	2.425	-	-	2.263	-	-
Pot Cap-1 Maneuver	443	456	735	408	444	862	1180	-	-	1367	-	-
Stage 1	676	640	-	747	748	-	-	-	-	-	-	-
Stage 2	793	748	-	605	627	-	-	-	-	-	-	-
Platoon blocked, %								-	-		-	-
Mov Cap-1 Maneuver	403	437	735	386	426	862	1180	-	-	1367	-	-
Mov Cap-2 Maneuver	403	437	-	386	426	-	-	-	-	-	-	-
Stage 1	673	616	-	744	745	-	-	-	-	-	-	-
Stage 2	742	745	-	569	604	-	-	-	-	-	-	-

Approach	EB	WB	NB	SB
HCM Control Delay, s	14.2	10.4	0.2	1.3
HCM LOS	B	B		

Minor Lane/Major Mvmt	NBL	NBT	NBR	EBLn1	WBLn1	WBLn2	SBL	SBT	SBR
Capacity (veh/h)	1180	-	-	441	401	862	1367	-	-
HCM Lane V/C Ratio	0.004	-	-	0.111	0.029	0.054	0.037	-	-
HCM Control Delay (s)	8.1	-	-	14.2	14.2	9.4	7.7	-	-
HCM Lane LOS	A	-	-	B	B	A	A	-	-
HCM 95th %tile Q(veh)	0	-	-	0.4	0.1	0.2	0.1	-	-

Intersection	
Int Delay, s/veh	0

Movement	EBT	EBR	WBL	WBT	NBL	NBR
Lane Configurations						
Traffic Vol, veh/h	9	0	0	12	0	0
Future Vol, veh/h	9	0	0	12	0	0
Conflicting Peds, #/hr	0	0	0	0	0	0
Sign Control	Free	Free	Free	Free	Stop	Stop
RT Channelized	-	None	-	None	-	None
Storage Length	-	-	-	-	0	-
Veh in Median Storage, #	0	-	-	0	0	-
Grade, %	0	-	-	0	0	-
Peak Hour Factor	95	95	95	95	95	95
Heavy Vehicles, %	2	2	2	2	0	0
Mvmt Flow	9	0	0	13	0	0

Major/Minor	Major1		Major2		Minor1	
Conflicting Flow All	0	0	9	0	22	9
Stage 1	-	-	-	-	9	-
Stage 2	-	-	-	-	13	-
Critical Hdwy	-	-	4.12	-	6.4	6.2
Critical Hdwy Stg 1	-	-	-	-	5.4	-
Critical Hdwy Stg 2	-	-	-	-	5.4	-
Follow-up Hdwy	-	-	2.218	-	3.5	3.3
Pot Cap-1 Maneuver	-	-	1611	-	1000	1079
Stage 1	-	-	-	-	1019	-
Stage 2	-	-	-	-	1015	-
Platoon blocked, %	-	-		-		
Mov Cap-1 Maneuver	-	-	1611	-	1000	1079
Mov Cap-2 Maneuver	-	-	-	-	1000	-
Stage 1	-	-	-	-	1019	-
Stage 2	-	-	-	-	1015	-

Approach	EB	WB	NB
HCM Control Delay, s	0	0	0
HCM LOS			A

Minor Lane/Major Mvmt	NBLn1	EBT	EBR	WBL	WBT
Capacity (veh/h)	-	-	-	1611	-
HCM Lane V/C Ratio	-	-	-	-	-
HCM Control Delay (s)	0	-	-	0	-
HCM Lane LOS	A	-	-	A	-
HCM 95th %tile Q(veh)	-	-	-	0	-

Capacity Analysis Summary Sheets

Year 2028 Total Projected Weekday Morning Peak Hour

Intersection	
Intersection Delay, s/veh	3.1
Intersection LOS	A

Approach	EB	WB	NB	SB
Entry Lanes	1	1	1	1
Conflicting Circle Lanes	1	1	1	1
Adj Approach Flow, veh/h	47	25	8	43
Demand Flow Rate, veh/h	51	25	8	47
Vehicles Circulating, veh/h	5	33	42	30
Vehicles Exiting, veh/h	72	17	14	28
Ped Vol Crossing Leg, #/h	0	0	0	0
Ped Cap Adj	1.000	1.000	1.000	1.000
Approach Delay, s/veh	3.1	2.8	2.8	3.2
Approach LOS	A	A	A	A

Lane	Left	Left	Left	Left
Designated Moves	LTR	LTR	LTR	LTR
Assumed Moves	LTR	LTR	LTR	LTR
RT Channelized				
Lane Util	1.000	1.000	1.000	1.000
Follow-Up Headway, s	2.609	2.609	2.609	2.609
Critical Headway, s	4.976	4.976	4.976	4.976
Entry Flow, veh/h	51	25	8	47
Cap Entry Lane, veh/h	1373	1334	1322	1338
Entry HV Adj Factor	0.922	1.000	1.000	0.915
Flow Entry, veh/h	47	25	8	43
Cap Entry, veh/h	1265	1334	1322	1224
V/C Ratio	0.037	0.019	0.006	0.035
Control Delay, s/veh	3.1	2.8	2.8	3.2
LOS	A	A	A	A
95th %tile Queue, veh	0	0	0	0

Intersection	
Int Delay, s/veh	3.1

Movement	EBL	EBT	EBR	WBL	WBT	WBR	NBL	NBT	NBR	SBL	SBT	SBR
Lane Configurations												
Traffic Vol, veh/h	40	3	0	4	5	45	2	171	5	30	88	30
Future Vol, veh/h	40	3	0	4	5	45	2	171	5	30	88	30
Conflicting Peds, #/hr	0	0	0	0	0	0	0	0	0	0	0	0
Sign Control	Stop	Stop	Stop	Stop	Stop	Stop	Free	Free	Free	Free	Free	Free
RT Channelized	-	-	None	-	-	None	-	-	None	-	-	None
Storage Length	-	-	-	-	-	0	140	-	-	210	-	-
Veh in Median Storage, #	-	0	-	-	0	-	-	0	-	-	0	-
Grade, %	-	0	-	-	0	-	-	0	-	-	0	-
Peak Hour Factor	95	95	95	95	95	95	95	95	95	95	95	95
Heavy Vehicles, %	3	0	0	0	0	5	0	2	20	7	5	7
Mvmt Flow	42	3	0	4	5	47	2	180	5	32	93	32

Major/Minor	Minor2			Minor1			Major1			Major2		
Conflicting Flow All	386	362	109	362	376	183	125	0	0	185	0	0
Stage 1	173	173	-	187	187	-	-	-	-	-	-	-
Stage 2	213	189	-	175	189	-	-	-	-	-	-	-
Critical Hdwy	7.13	6.5	6.2	7.1	6.5	6.25	4.1	-	-	4.17	-	-
Critical Hdwy Stg 1	6.13	5.5	-	6.1	5.5	-	-	-	-	-	-	-
Critical Hdwy Stg 2	6.13	5.5	-	6.1	5.5	-	-	-	-	-	-	-
Follow-up Hdwy	3.527	4	3.3	3.5	4	3.345	2.2	-	-	2.263	-	-
Pot Cap-1 Maneuver	571	569	950	598	558	852	1474	-	-	1360	-	-
Stage 1	827	760	-	819	749	-	-	-	-	-	-	-
Stage 2	787	748	-	832	748	-	-	-	-	-	-	-
Platoon blocked, %								-	-		-	-
Mov Cap-1 Maneuver	525	555	950	584	544	852	1474	-	-	1360	-	-
Mov Cap-2 Maneuver	525	555	-	584	544	-	-	-	-	-	-	-
Stage 1	826	742	-	818	748	-	-	-	-	-	-	-
Stage 2	737	747	-	809	730	-	-	-	-	-	-	-

Approach	EB	WB	NB	SB
HCM Control Delay, s	12.5	9.8	0.1	1.6
HCM LOS	B	A		

Minor Lane/Major Mvmt	NBL	NBT	NBR	EBLn1	WBLn1	WBLn2	SBL	SBT	SBR
Capacity (veh/h)	1474	-	-	527	561	852	1360	-	-
HCM Lane V/C Ratio	0.001	-	-	0.086	0.017	0.056	0.023	-	-
HCM Control Delay (s)	7.4	-	-	12.5	11.5	9.5	7.7	-	-
HCM Lane LOS	A	-	-	B	B	A	A	-	-
HCM 95th %tile Q(veh)	0	-	-	0.3	0.1	0.2	0.1	-	-

Intersection	
Int Delay, s/veh	3.3

Movement	EBT	EBR	WBL	WBT	NBL	NBR
Lane Configurations						
Traffic Vol, veh/h	10	4	0	7	13	0
Future Vol, veh/h	10	4	0	7	13	0
Conflicting Peds, #/hr	0	0	0	0	0	0
Sign Control	Free	Free	Free	Free	Stop	Stop
RT Channelized	-	None	-	None	-	None
Storage Length	-	-	-	-	0	-
Veh in Median Storage, #	0	-	-	0	0	-
Grade, %	0	-	-	0	0	-
Peak Hour Factor	95	95	95	95	95	95
Heavy Vehicles, %	2	2	2	2	0	0
Mvmt Flow	11	4	0	7	14	0

Major/Minor	Major1		Major2		Minor1	
Conflicting Flow All	0	0	15	0	20	13
Stage 1	-	-	-	-	13	-
Stage 2	-	-	-	-	7	-
Critical Hdwy	-	-	4.12	-	6.4	6.2
Critical Hdwy Stg 1	-	-	-	-	5.4	-
Critical Hdwy Stg 2	-	-	-	-	5.4	-
Follow-up Hdwy	-	-	2.218	-	3.5	3.3
Pot Cap-1 Maneuver	-	-	1603	-	1002	1073
Stage 1	-	-	-	-	1015	-
Stage 2	-	-	-	-	1021	-
Platoon blocked, %	-	-		-		
Mov Cap-1 Maneuver	-	-	1603	-	1002	1073
Mov Cap-2 Maneuver	-	-	-	-	1002	-
Stage 1	-	-	-	-	1015	-
Stage 2	-	-	-	-	1021	-

Approach	EB	WB	NB
HCM Control Delay, s	0	0	8.6
HCM LOS			A

Minor Lane/Major Mvmt	NBLn1	EBT	EBR	WBL	WBT
Capacity (veh/h)	1002	-	-	1603	-
HCM Lane V/C Ratio	0.014	-	-	-	-
HCM Control Delay (s)	8.6	-	-	0	-
HCM Lane LOS	A	-	-	A	-
HCM 95th %tile Q(veh)	0	-	-	0	-

Capacity Analysis Summary Sheets

Year 2028 Total Projected Weekday Evening Peak Hour

Intersection	
Intersection Delay, s/veh	3.2
Intersection LOS	A

Approach	EB	WB	NB	SB
Entry Lanes	1	1	1	1
Conflicting Circle Lanes	1	1	1	1
Adj Approach Flow, veh/h	87	26	11	48
Demand Flow Rate, veh/h	90	29	12	53
Vehicles Circulating, veh/h	2	59	79	32
Vehicles Exiting, veh/h	83	32	13	56
Ped Vol Crossing Leg, #/h	0	0	0	0
Ped Cap Adj	1.000	1.000	1.000	1.000
Approach Delay, s/veh	3.2	3.2	3.2	3.3
Approach LOS	A	A	A	A

Lane	Left	Left	Left	Left
Designated Moves	LTR	LTR	LTR	LTR
Assumed Moves	LTR	LTR	LTR	LTR
RT Channelized				
Lane Util	1.000	1.000	1.000	1.000
Follow-Up Headway, s	2.609	2.609	2.609	2.609
Critical Headway, s	4.976	4.976	4.976	4.976
Entry Flow, veh/h	90	29	12	53
Cap Entry Lane, veh/h	1377	1299	1273	1336
Entry HV Adj Factor	0.967	0.911	0.917	0.906
Flow Entry, veh/h	87	26	11	48
Cap Entry, veh/h	1331	1184	1167	1210
V/C Ratio	0.065	0.022	0.009	0.040
Control Delay, s/veh	3.2	3.2	3.2	3.3
LOS	A	A	A	A
95th %tile Queue, veh	0	0	0	0

Intersection	
Int Delay, s/veh	3.2

Movement	EBL	EBT	EBR	WBL	WBT	WBR	NBL	NBT	NBR	SBL	SBT	SBR
Lane Configurations												
Traffic Vol, veh/h	30	8	7	8	5	46	4	155	6	53	195	35
Future Vol, veh/h	30	8	7	8	5	46	4	155	6	53	195	35
Conflicting Peds, #/hr	0	0	0	0	0	0	0	0	0	0	0	0
Sign Control	Stop	Stop	Stop	Stop	Stop	Stop	Free	Free	Free	Free	Free	Free
RT Channelized	-	-	None	-	-	None	-	-	None	-	-	None
Storage Length	-	-	-	-	-	0	140	-	-	210	-	-
Veh in Median Storage, #	-	0	-	-	0	-	-	0	-	-	0	-
Grade, %	-	0	-	-	0	-	-	0	-	-	0	-
Peak Hour Factor	86	86	86	86	86	86	86	86	86	86	86	86
Heavy Vehicles, %	0	0	29	25	0	2	25	5	17	6	21	6
Mvmt Flow	35	9	8	9	6	53	5	180	7	62	227	41

Major/Minor	Minor2			Minor1			Major1			Major2		
Conflicting Flow All	595	569	248	574	586	184	268	0	0	187	0	0
Stage 1	372	372	-	194	194	-	-	-	-	-	-	-
Stage 2	223	197	-	380	392	-	-	-	-	-	-	-
Critical Hdwy	7.1	6.5	6.49	7.35	6.5	6.22	4.35	-	-	4.16	-	-
Critical Hdwy Stg 1	6.1	5.5	-	6.35	5.5	-	-	-	-	-	-	-
Critical Hdwy Stg 2	6.1	5.5	-	6.35	5.5	-	-	-	-	-	-	-
Follow-up Hdwy	3.5	4	3.561	3.725	4	3.318	2.425	-	-	2.254	-	-
Pot Cap-1 Maneuver	419	435	729	397	425	858	1174	-	-	1364	-	-
Stage 1	653	622	-	758	744	-	-	-	-	-	-	-
Stage 2	784	742	-	598	610	-	-	-	-	-	-	-
Platoon blocked, %								-	-		-	-
Mov Cap-1 Maneuver	374	414	729	371	404	858	1174	-	-	1364	-	-
Mov Cap-2 Maneuver	374	414	-	371	404	-	-	-	-	-	-	-
Stage 1	650	594	-	755	741	-	-	-	-	-	-	-
Stage 2	726	739	-	556	583	-	-	-	-	-	-	-

Approach	EB	WB	NB	SB
HCM Control Delay, s	15	10.7	0.2	1.5
HCM LOS	C	B		

Minor Lane/Major Mvmt	NBL	NBT	NBR	EBLn1	WBLn1	WBLn2	SBL	SBT	SBR
Capacity (veh/h)	1174	-	-	412	383	858	1364	-	-
HCM Lane V/C Ratio	0.004	-	-	0.127	0.039	0.062	0.045	-	-
HCM Control Delay (s)	8.1	-	-	15	14.8	9.5	7.8	-	-
HCM Lane LOS	A	-	-	C	B	A	A	-	-
HCM 95th %tile Q(veh)	0	-	-	0.4	0.1	0.2	0.1	-	-

Intersection	
Int Delay, s/veh	1.6

Movement	EBT	EBR	WBL	WBT	NBL	NBR
Lane Configurations						
Traffic Vol, veh/h	9	14	0	12	8	0
Future Vol, veh/h	9	14	0	12	8	0
Conflicting Peds, #/hr	0	0	0	0	0	0
Sign Control	Free	Free	Free	Free	Stop	Stop
RT Channelized	-	None	-	None	-	None
Storage Length	-	-	-	-	0	-
Veh in Median Storage, #	0	-	-	0	0	-
Grade, %	0	-	-	0	0	-
Peak Hour Factor	95	95	95	95	95	95
Heavy Vehicles, %	2	2	2	2	0	0
Mvmt Flow	9	15	0	13	8	0

Major/Minor	Major1		Major2		Minor1	
Conflicting Flow All	0	0	24	0	30	17
Stage 1	-	-	-	-	17	-
Stage 2	-	-	-	-	13	-
Critical Hdwy	-	-	4.12	-	6.4	6.2
Critical Hdwy Stg 1	-	-	-	-	5.4	-
Critical Hdwy Stg 2	-	-	-	-	5.4	-
Follow-up Hdwy	-	-	2.218	-	3.5	3.3
Pot Cap-1 Maneuver	-	-	1591	-	989	1068
Stage 1	-	-	-	-	1011	-
Stage 2	-	-	-	-	1015	-
Platoon blocked, %	-	-		-		
Mov Cap-1 Maneuver	-	-	1591	-	989	1068
Mov Cap-2 Maneuver	-	-	-	-	989	-
Stage 1	-	-	-	-	1011	-
Stage 2	-	-	-	-	1015	-

Approach	EB	WB	NB
HCM Control Delay, s	0	0	8.7
HCM LOS			A

Minor Lane/Major Mvmt	NBLn1	EBT	EBR	WBL	WBT
Capacity (veh/h)	989	-	-	1591	-
HCM Lane V/C Ratio	0.009	-	-	-	-
HCM Control Delay (s)	8.7	-	-	0	-
HCM Lane LOS	A	-	-	A	-
HCM 95th %tile Q(veh)	0	-	-	0	-

McNaughton Devleopment
Enclave of Highland Fields
Fiscal Impact Analysis
Executive Summary

Village of Burr Ridge
Total in Nominal Dollars (Year 1 - Year 20)

Total Payments to Village	$	169,392
Total Costs to Village	$	0
Total (Cost)/Benefit to Village (Year 1 - Year 20)	**$**	**169,392**

School District 204
Total in Nominal Dollars (Year 1 - Year 20)

Total Payments to SD 204	$	3,165,214
Total Costs to SD 204	$	203,889
Total (Cost)/Benefit to SD 204 (Year 1 - Year 20)	**$**	**2,961,325**

School District 107
Total in Nominal Dollars (Year 1 - Year 20)

Total Payments to SD 107	$	3,144,242
Total Costs to SD 107	$	448,606
Total (Cost)/Benefit to SD 107 (Year 1 - Year 20)	**$**	**2,695,636**

Pleasantdale Fire District
Total in Nominal Dollars (Year 1 - Year 20)

Total Payments to Fire District	$	1,179,292
Total Costs to Fire District	$	-
Total (Cost)/Benefit to Village (Year 1 - Year 20)	**$**	**1,179,292**

Pleasantdale Park District
Total in Nominal Dollars (Year 1 - Year 20)

Total Payments to Fire District	$	532,376
Total Costs to Park	$	-
Total (Cost)/Benefit to Village (Year 1 - Year 20)	**$**	**532,376**

McNaughton Devleopment
Enclave of Highland Fields
Fiscal Impact Analysis
Cost Benefit Summary Village of Burr Ridge

Year	Village of Burr Ridge	Incremental Village Costs	Benefit/(Cost)
Year 1	$ 6,631	$ 0	$ 6,631
Year 2	$ 6,797	$ 0	$ 6,797
Year 3	$ 6,967	$ 0	$ 6,967
Year 4	$ 7,141	$ 0	$ 7,141
Year 5	$ 7,320	$ 0	$ 7,320
Year 6	$ 7,503	$ 0	$ 7,503
Year 7	$ 7,690	$ 0	$ 7,690
Year 8	$ 7,882	$ 0	$ 7,882
Year 9	$ 8,079	$ 0	$ 8,079
Year 10	$ 8,281	$ 0	$ 8,281
Year 11	$ 8,489	$ 0	$ 8,489
Year 12	$ 8,701	$ 0	$ 8,701
Year 13	$ 8,918	$ 0	$ 8,918
Year 14	$ 9,141	$ 0	$ 9,141
Year 15	$ 9,370	$ 0	$ 9,370
Year 16	$ 9,604	$ 0	$ 9,604
Year 17	$ 9,844	$ 0	$ 9,844
Year 18	$ 10,090	$ 0	$ 10,090
Year 19	$ 10,342	$ 0	$ 10,342
Year 20	$ 10,601	$ 0	$ 10,601
Total	**$ 169,392**	**$ 0**	**$ 169,392**

McNaughton Devleopment
Enclave of Highland Fields
Fiscal Impact Analysis
Cost Benefit Summary Pleasantdale Fire District

Year	Pleasantdale Fire District	Incremental Costs	Benefit/(Cost)
Year 1	$ 46,166	$ 0	$ 46,166
Year 2	$ 47,320	$ 0	$ 47,320
Year 3	$ 48,503	$ 0	$ 48,503
Year 4	$ 49,716	$ 0	$ 49,716
Year 5	$ 50,959	$ 0	$ 50,959
Year 6	$ 52,232	$ 0	$ 52,232
Year 7	$ 53,538	$ 0	$ 53,538
Year 8	$ 54,877	$ 0	$ 54,877
Year 9	$ 56,249	$ 0	$ 56,249
Year 10	$ 57,655	$ 0	$ 57,655
Year 11	$ 59,096	$ 0	$ 59,096
Year 12	$ 60,574	$ 0	$ 60,574
Year 13	$ 62,088	$ 0	$ 62,088
Year 14	$ 63,640	$ 0	$ 63,640
Year 15	$ 65,231	$ 0	$ 65,231
Year 16	$ 66,862	$ 0	$ 66,862
Year 17	$ 68,534	$ 0	$ 68,534
Year 18	$ 70,247	$ 0	$ 70,247
Year 19	$ 72,003	$ 0	$ 72,003
Year 20	$ 73,803	$ 0	$ 73,803
Total	**$ 1,179,292**	**$ 0**	**$ 1,179,292**

McNaughton Devleopment
Enclave of Highland Fields
Fiscal Impact Analysis
Cost Benefit Summary Pleasantdale Park District

Year	Pleasantdale Park District	Incremental Costs	Benefit/(Cost)
Year 1	$ 20,841	$ 0	$ 20,841
Year 2	$ 21,362	$ 0	$ 21,362
Year 3	$ 21,896	$ 0	$ 21,896
Year 4	$ 22,443	$ 0	$ 22,443
Year 5	$ 23,005	$ 0	$ 23,005
Year 6	$ 23,580	$ 0	$ 23,580
Year 7	$ 24,169	$ 0	$ 24,169
Year 8	$ 24,773	$ 0	$ 24,773
Year 9	$ 25,393	$ 0	$ 25,393
Year 10	$ 26,028	$ 0	$ 26,028
Year 11	$ 26,678	$ 0	$ 26,678
Year 12	$ 27,345	$ 0	$ 27,345
Year 13	$ 28,029	$ 0	$ 28,029
Year 14	$ 28,730	$ 0	$ 28,730
Year 15	$ 29,448	$ 0	$ 29,448
Year 16	$ 30,184	$ 0	$ 30,184
Year 17	$ 30,939	$ 0	$ 30,939
Year 18	$ 31,712	$ 0	$ 31,712
Year 19	$ 32,505	$ 0	$ 32,505
Year 20	$ 33,317	$ 0	$ 33,317
Total	**$ 532,376**	**$ 0**	**$ 532,376**

McNaughton Devleopment
Hinsdale
Fiscal Impact Analysis
Cost Benefit Summary Lyons 204

Year	School District 204 Property Taxes	Incremental Student Costs	Benefit/(Cost)
Year 1	$ 123,909	$ 8,011	$ 115,898
Year 2	$ 127,007	$ 8,209	$ 118,798
Year 3	$ 130,182	$ 8,411	$ 121,771
Year 4	$ 133,437	$ 8,618	$ 124,819
Year 5	$ 136,772	$ 8,830	$ 127,942
Year 6	$ 140,192	$ 9,048	$ 131,144
Year 7	$ 143,697	$ 9,271	$ 134,426
Year 8	$ 147,289	$ 9,499	$ 137,790
Year 9	$ 150,971	$ 9,733	$ 141,238
Year 10	$ 154,745	$ 9,973	$ 144,773
Year 11	$ 158,614	$ 10,218	$ 148,396
Year 12	$ 162,579	$ 10,470	$ 152,109
Year 13	$ 166,644	$ 10,728	$ 155,916
Year 14	$ 170,810	$ 10,992	$ 159,818
Year 15	$ 175,080	$ 11,263	$ 163,817
Year 16	$ 179,457	$ 11,540	$ 167,917
Year 17	$ 183,944	$ 11,825	$ 172,119
Year 18	$ 188,542	$ 12,116	$ 176,426
Year 19	$ 193,256	$ 12,414	$ 180,841
Year 20	$ 198,087	$ 12,720	$ 185,367
Total	**$ 3,165,214**	**$ 203,889**	**$ 2,961,325**

McNaughton Devleopment
Enclave of Highland Fields
Fiscal Impact Analysis
Cost Benefit Summary Pleasantdale 107

Year	School District 107 Property Taxes	School District 107 Incremental Student Costs	Benefit/(Cost)
Year 1	$ 123,088	$ 17,627	$ 105,461
Year 2	$ 126,165	$ 18,061	$ 108,104
Year 3	$ 129,319	$ 18,506	$ 110,814
Year 4	$ 132,552	$ 18,962	$ 113,591
Year 5	$ 135,866	$ 19,429	$ 116,438
Year 6	$ 139,263	$ 19,907	$ 119,356
Year 7	$ 142,744	$ 20,398	$ 122,347
Year 8	$ 146,313	$ 20,900	$ 125,413
Year 9	$ 149,971	$ 21,415	$ 128,556
Year 10	$ 153,720	$ 21,942	$ 131,778
Year 11	$ 157,563	$ 22,483	$ 135,080
Year 12	$ 161,502	$ 23,037	$ 138,465
Year 13	$ 165,540	$ 23,604	$ 141,936
Year 14	$ 169,678	$ 24,186	$ 145,493
Year 15	$ 173,920	$ 24,781	$ 149,139
Year 16	$ 178,268	$ 25,392	$ 152,876
Year 17	$ 182,725	$ 26,017	$ 156,708
Year 18	$ 187,293	$ 26,658	$ 160,635
Year 19	$ 191,975	$ 27,315	$ 164,660
Year 20	$ 196,775	$ 27,988	$ 168,787
Total	**$ 3,144,242**	**$ 448,606**	**$ 2,695,636**

McNaughton Devleopment
Enclave of Highland Fields
Fiscal Impact Analysis
Fair Market Value Assumptions

Type of Units	Number of Units	Unit Chunk Price	Discount Factor	Estimated FMV for Purposes of County Assessor	Estimated Taxes Per Unit
Single Family Ranch	13	$ 1,100,000	15%	$ 935,000	$ 19,180
Single Family Masters Down	7	$ 1,250,000	15%	$ 1,062,500	$ 21,796
Total Units	20				

McNaughton Devleopment
Enclave of Highland Fields
Fiscal Impact Analysis
Tax Assumptions - Tax Year 2020 Tax Rates

Assessment Ratio	10%
Equalization Multiplier	3.2234
Total Tax Rate	6.364%
Lyons School District 204 Tax Rate	1.9620%
Pleasantdale District 107 Tax Rate	1.9490%
Village of Burr Ridge	0.1050%
Pleasantdale Fire Protection	0.7310%
Pleasantdale Park District	0.3300%
Annual Reassessment Growth Rate	2.50%

McNaughton Devleopment
Enclave of Highland Fields
Total
Property Tax Projections

	Year 1	Year 2	Year 3	Year 4	Year 5	Year 6	Year 7	Year 8	Year 9
Estiamted Fair Market Value									
Single Family Ranch	$ 12,155,000	$ 12,458,875	$ 12,770,347	$ 13,089,606	$ 13,416,846	$ 13,752,267	$ 14,096,073	$ 14,448,475	$ 14,809,687
Single Family Masters Down	$ 7,437,500	$ 7,623,438	$ 7,814,023	$ 8,009,374	$ 8,209,608	$ 8,414,849	$ 8,625,220	$ 8,840,850	$ 9,061,872
Total Estimated FMV	$ 19,592,500	$ 20,082,313	$ 20,584,370	$ 21,098,980	$ 21,626,454	$ 22,167,115	$ 22,721,293	$ 23,289,326	$ 23,871,559
Assessment Ratio	10%	10%	10%	10%	10%	10%	10%	10%	10%
Equalization Multiplier	3.2234	3.2234	3.2234	3.2234	3.2234	3.2234	3.2234	3.2234	3.2234
Total	6.3640%	6.3640%	6.3640%	6.3640%	6.3640%	6.3640%	6.3640%	6.3640%	6.3640%
Taxes to from the Development	$ 401,915	$ 411,963	$ 422,262	$ 432,819	$ 443,639	$ 454,730	$ 466,098	$ 477,751	$ 489,694

McNaughton Devleopment
Enclave of Highland Fields
Total
Property Tax Projections

	Year 10	Year 11	Year 12	Year 13	Year 14	Year 15	Year 16	Year 17	Year 18
Estiamted Fair Market Value									
Single Family Ranch	$ 15,179,929	$ 15,559,428	$ 15,948,413	$ 16,347,124	$ 16,755,802	$ 17,174,697	$ 17,604,064	$ 18,044,166	$ 18,495,270
Single Family Masters Down	$ 9,288,418	$ 9,520,629	$ 9,758,645	$ 10,002,611	$ 10,252,676	$ 10,508,993	$ 10,771,718	$ 11,041,011	$ 11,317,036
Total Estimated FMV	$ 24,468,348	$ 25,080,056	$ 25,707,058	$ 26,349,734	$ 27,008,478	$ 27,683,690	$ 28,375,782	$ 29,085,176	$ 29,812,306
Assessment Ratio	10%	10%	10%	10%	10%	10%	10%	10%	10%
Equalization Multiplier	3.2234	3.2234	3.2234	3.2234	3.2234	3.2234	3.2234	3.2234	3.2234
Total	6.3640%	6.3640%	6.3640%	6.3640%	6.3640%	6.3640%	6.3640%	6.3640%	6.3640%
Taxes to from the Development	$ 501,937	$ 514,485	$ 527,347	$ 540,531	$ 554,044	$ 567,895	$ 582,093	$ 596,645	$ 611,561

McNaughton Devleopment
Enclave of Highland Fields
Total
Property Tax Projections

	Year 19	Year 20
Estiamted Fair Market Value		
Single Family Ranch	$ 18,957,652	$ 19,431,593
Single Family Masters Down	$ 11,599,962	$ 11,889,961
Total Estimated FMV	$ 30,557,613	$ 31,321,554
Assessment Ratio	10%	10%
Equalization Multiplier	3.2234	3.2234
Total	6.3640%	6.3640%
Taxes to from the Development	$ 626,850	$ 642,522

McNaughton Devleopment
Enclave of Highland Fields
Total
Village Property Tax Projections

	Year 1	Year 2	Year 3	Year 4	Year 5	Year 6	Year 7	Year 8	Year 9
Estiamted Fair Market Value									
Single Family Ranch	$ 12,155,000	$ 12,458,875	$ 12,770,347	$ 13,089,606	$ 13,416,846	$ 13,752,267	$ 14,096,073	$ 14,448,475	$ 14,809,687
Single Family Masters Down	$ 7,437,500	$ 7,623,438	$ 7,814,023	$ 8,009,374	$ 8,209,608	$ 8,414,849	$ 8,625,220	$ 8,840,850	$ 9,061,872
Total Estimated FMV	$ 19,592,500	$ 20,082,313	$ 20,584,370	$ 21,098,980	$ 21,626,454	$ 22,167,115	$ 22,721,293	$ 23,289,326	$ 23,871,559
Assessment Ratio	10%	10%	10%	10%	10%	10%	10%	10%	10%
Equalization Multiplier	3.2234	3.2234	3.2234	3.2234	3.2234	3.2234	3.2234	3.2234	3.2234
Village Rate	0.1050%	0.1050%	0.1050%	0.1050%	0.1050%	0.1050%	0.1050%	0.1050%	0.1050%
Taxes to from the Development	$ 6,631	$ 6,797	$ 6,967	$ 7,141	$ 7,320	$ 7,503	$ 7,690	$ 7,882	$ 8,079

McNaughton Devleopment
Enclave of Highland Fields
Total
Village Property Tax Projections

	Year 10	Year 11	Year 12	Year 13	Year 14	Year 15	Year 16	Year 17	Year 18
Estiamted Fair Market Value									
Single Family Ranch	$ 15,179,929	$ 15,559,428	$ 15,948,413	$ 16,347,124	$ 16,755,802	$ 17,174,697	$ 17,604,064	$ 18,044,166	$ 18,495,270
Single Family Masters Down	$ 9,288,418	$ 9,520,629	$ 9,758,645	$ 10,002,611	$ 10,252,676	$ 10,508,993	$ 10,771,718	$ 11,041,011	$ 11,317,036
Total Estimated FMV	$ 24,468,348	$ 25,080,056	$ 25,707,058	$ 26,349,734	$ 27,008,478	$ 27,683,690	$ 28,375,782	$ 29,085,176	$ 29,812,306
Assessment Ratio	10%	10%	10%	10%	10%	10%	10%	10%	10%
Equalization Multiplier	3.2234	3.2234	3.2234	3.2234	3.2234	3.2234	3.2234	3.2234	3.2234
Village Rate	0.1050%	0.1050%	0.1050%	0.1050%	0.1050%	0.1050%	0.1050%	0.1050%	0.1050%
Taxes to from the Development	$ 8,281	$ 8,489	$ 8,701	$ 8,918	$ 9,141	$ 9,370	$ 9,604	$ 9,844	$ 10,090

McNaughton Devleopment
Enclave of Highland Fields
Total
Village Property Tax Projections

	Year 19	Year 20
Estiamted Fair Market Value		
Single Family Ranch	$ 18,957,652	$ 19,431,593
Single Family Masters Down	$ 11,599,962	$ 11,889,961
Total Estimated FMV	$ 30,557,613	$ 31,321,554
Assessment Ratio	10%	10%
Equalization Multiplier	3.2234	3.2234
Village Rate	0.1050%	0.1050%
Taxes to from the Development	$ 10,342	$ 10,601

McNaughton Devleopment
Enclave of Highland Fields
Total
SD 204 Property Tax Projections

	Year 1	Year 2	Year 3	Year 4	Year 5	Year 6	Year 7	Year 8	Year 9
Estiamted Fair Market Value									
Single Family Ranch	$ 12,155,000	$ 12,458,875	$ 12,770,347	$ 13,089,606	$ 13,416,846	$ 13,752,267	$ 14,096,073	$ 14,448,475	$ 14,809,687
Single Family Masters Down	$ 7,437,500	$ 7,623,438	$ 7,814,023	$ 8,009,374	$ 8,209,608	$ 8,414,849	$ 8,625,220	$ 8,840,850	$ 9,061,872
Total Estimated FMV	$ 19,592,500	$ 20,082,313	$ 20,584,370	$ 21,098,980	$ 21,626,454	$ 22,167,115	$ 22,721,293	$ 23,289,326	$ 23,871,559
Assessment Ratio	10%	10%	10%	10%	10%	10%	10%	10%	10%
Equalization Multiplier	3.2234	3.2234	3.2234	3.2234	3.2234	3.2234	3.2234	3.2234	3.2234
SD 204	1.9620%	1.9620%	1.9620%	1.9620%	1.9620%	1.9620%	1.9620%	1.9620%	1.9620%
Taxes to from the Development	$ 123,909	$ 127,007	$ 130,182	$ 133,437	$ 136,772	$ 140,192	$ 143,697	$ 147,289	$ 150,971

McNaughton Devleopment
Enclave of Highland Fields
Total
SD 204 Property Tax Projections

	Year 10	Year 11	Year 12	Year 13	Year 14	Year 15	Year 16	Year 17	Year 18
Estiamted Fair Market Value									
Single Family Ranch	$ 15,179,929	$ 15,559,428	$ 15,948,413	$ 16,347,124	$ 16,755,802	$ 17,174,697	$ 17,604,064	$ 18,044,166	$ 18,495,270
Single Family Masters Down	$ 9,288,418	$ 9,520,629	$ 9,758,645	$ 10,002,611	$ 10,252,676	$ 10,508,993	$ 10,771,718	$ 11,041,011	$ 11,317,036
Total Estimated FMV	$ 24,468,348	$ 25,080,056	$ 25,707,058	$ 26,349,734	$ 27,008,478	$ 27,683,690	$ 28,375,782	$ 29,085,176	$ 29,812,306
Assessment Ratio	10%	10%	10%	10%	10%	10%	10%	10%	10%
Equalization Multiplier	3.2234	3.2234	3.2234	3.2234	3.2234	3.2234	3.2234	3.2234	3.2234
SD 204	1.9620%	1.9620%	1.9620%	1.9620%	1.9620%	1.9620%	1.9620%	1.9620%	1.9620%
Taxes to from the Development	$ 154,745	$ 158,614	$ 162,579	$ 166,644	$ 170,810	$ 175,080	$ 179,457	$ 183,944	$ 188,542

McNaughton Devleopment
Enclave of Highland Fields
Total
SD 204 Property Tax Projections

	Year 19	Year 20
Estiamted Fair Market Value		
Single Family Ranch	$ 18,957,652	$ 19,431,593
Single Family Masters Down	$ 11,599,962	$ 11,889,961
Total Estimated FMV	$ 30,557,613	$ 31,321,554
Assessment Ratio	10%	10%
Equalization Multiplier	3.2234	3.2234
SD 204	1.9620%	1.9620%
Taxes to from the Development	$ 193,256	$ 198,087

McNaughton Devleopment
Enclave of Highland Fields
Total
SD 107 Property Tax Projections

	Year 1	Year 2	Year 3	Year 4	Year 5	Year 6	Year 7	Year 8	Year 9
Estiamted Fair Market Value									
Single Family Ranch	$ 12,155,000	$ 12,458,875	$ 12,770,347	$ 13,089,606	$ 13,416,846	$ 13,752,267	$ 14,096,073	$ 14,448,475	$ 14,809,687
Single Family Masters Down	$ 7,437,500	$ 7,623,438	$ 7,814,023	$ 8,009,374	$ 8,209,608	$ 8,414,849	$ 8,625,220	$ 8,840,850	$ 9,061,872
Total Estimated FMV	$ 19,592,500	$ 20,082,313	$ 20,584,370	$ 21,098,980	$ 21,626,454	$ 22,167,115	$ 22,721,293	$ 23,289,326	$ 23,871,559
Assessment Ratio	10%	10%	10%	10%	10%	10%	10%	10%	10%
Equalization Multiplier	3.2234	3.2234	3.2234	3.2234	3.2234	3.2234	3.2234	3.2234	3.2234
SD 107	1.9490%	1.9490%	1.9490%	1.9490%	1.9490%	1.9490%	1.9490%	1.9490%	1.9490%
Taxes to from the Development	$ 123,088	$ 126,165	$ 129,319	$ 132,552	$ 135,866	$ 139,263	$ 142,744	$ 146,313	$ 149,971

McNaughton Devleopment
Enclave of Highland Fields
Total
SD 107 Property Tax Projections

	Year 10	Year 11	Year 12	Year 13	Year 14	Year 15	Year 16	Year 17	Year 18
Estiamted Fair Market Value									
Single Family Ranch	$ 15,179,929	$ 15,559,428	$ 15,948,413	$ 16,347,124	$ 16,755,802	$ 17,174,697	$ 17,604,064	$ 18,044,166	$ 18,495,270
Single Family Masters Down	$ 9,288,418	$ 9,520,629	$ 9,758,645	$ 10,002,611	$ 10,252,676	$ 10,508,993	$ 10,771,718	$ 11,041,011	$ 11,317,036
Total Estimated FMV	$ 24,468,348	$ 25,080,056	$ 25,707,058	$ 26,349,734	$ 27,008,478	$ 27,683,690	$ 28,375,782	$ 29,085,176	$ 29,812,306
Assessment Ratio	10%	10%	10%	10%	10%	10%	10%	10%	10%
Equalization Multiplier	3.2234	3.2234	3.2234	3.2234	3.2234	3.2234	3.2234	3.2234	3.2234
SD 107	1.9490%	1.9490%	1.9490%	1.9490%	1.9490%	1.9490%	1.9490%	1.9490%	1.9490%
Taxes to from the Development	$ 153,720	$ 157,563	$ 161,502	$ 165,540	$ 169,678	$ 173,920	$ 178,268	$ 182,725	$ 187,293

McNaughton Devleopment
Enclave of Highland Fields
Total
SD 107 Property Tax Projections

	Year 19	Year 20
Estiamted Fair Market Value		
Single Family Ranch	$ 18,957,652	$ 19,431,593
Single Family Masters Down	$ 11,599,962	$ 11,889,961
Total Estimated FMV	$ 30,557,613	$ 31,321,554
Assessment Ratio	10%	10%
Equalization Multiplier	3.2234	3.2234
SD 107	1.9490%	1.9490%
Taxes to from the Development	$ 191,975	$ 196,775

McNaughton Devleopment
Enclave of Highland Fields
Total
Fire District Property Tax Projections

	Year 1	Year 2	Year 3	Year 4	Year 5	Year 6	Year 7	Year 8	Year 9
Estiamted Fair Market Value									
Single Family Ranch	$ 12,155,000	$ 12,458,875	$ 12,770,347	$ 13,089,606	$ 13,416,846	$ 13,752,267	$ 14,096,073	$ 14,448,475	$ 14,809,687
Single Family Masters Down	$ 7,437,500	$ 7,623,438	$ 7,814,023	$ 8,009,374	$ 8,209,608	$ 8,414,849	$ 8,625,220	$ 8,840,850	$ 9,061,872
Total Estimated FMV	$ 19,592,500	$ 20,082,313	$ 20,584,370	$ 21,098,980	$ 21,626,454	$ 22,167,115	$ 22,721,293	$ 23,289,326	$ 23,871,559
Assessment Ratio	10%	10%	10%	10%	10%	10%	10%	10%	10%
Equalization Multiplier	3.2234	3.2234	3.2234	3.2234	3.2234	3.2234	3.2234	3.2234	3.2234
Fire District Rate	0.7310%	0.7310%	0.7310%	0.7310%	0.7310%	0.7310%	0.7310%	0.7310%	0.7310%
Taxes to from the Development	$ 46,166	$ 47,320	$ 48,503	$ 49,716	$ 50,959	$ 52,232	$ 53,538	$ 54,877	$ 56,249

Year 10	Year 11	Year 12	Year 13	Year 14	Year 15	Year 16	Year 17	Year 18	Year 19	Year 20
$ 15,179,929	$ 15,559,428	$ 15,948,413	$ 16,347,124	$ 16,755,802	$ 17,174,697	$ 17,604,064	$ 18,044,166	$ 18,495,270	$ 18,957,652	$ 19,431,593
$ 9,288,418	$ 9,520,629	$ 9,758,645	$ 10,002,611	$ 10,252,676	$ 10,508,993	$ 10,771,718	$ 11,041,011	$ 11,317,036	$ 11,599,962	$ 11,889,961
$ 24,468,348	$ 25,080,056	$ 25,707,058	$ 26,349,734	$ 27,008,478	$ 27,683,690	$ 28,375,782	$ 29,085,176	$ 29,812,306	$ 30,557,613	$ 31,321,554
10%	10%	10%	10%	10%	10%	10%	10%	10%	10%	10%
3.2234	3.2234	3.2234	3.2234	3.2234	3.2234	3.2234	3.2234	3.2234	3.2234	3.2234
0.7310%	0.7310%	0.7310%	0.7310%	0.7310%	0.7310%	0.7310%	0.7310%	0.7310%	0.7310%	0.7310%
$ 57,655	$ 59,096	$ 60,574	$ 62,088	$ 63,640	$ 65,231	$ 66,862	$ 68,534	$ 70,247	$ 72,003	$ 73,803

McNaughton Devleopment
Enclave of Highland Fields
Total
Park District Property Tax Projections

	Year 1	Year 2	Year 3	Year 4	Year 5	Year 6	Year 7	Year 8	Year 9
Estiamted Fair Market Value									
Single Family Ranch	$ 12,155,000	$ 12,458,875	$ 12,770,347	$ 13,089,606	$ 13,416,846	$ 13,752,267	$ 14,096,073	$ 14,448,475	$ 14,809,687
Single Family Masters Down	$ 7,437,500	$ 7,623,438	$ 7,814,023	$ 8,009,374	$ 8,209,608	$ 8,414,849	$ 8,625,220	$ 8,840,850	$ 9,061,872
Total Estimated FMV	$ 19,592,500	$ 20,082,313	$ 20,584,370	$ 21,098,980	$ 21,626,454	$ 22,167,115	$ 22,721,293	$ 23,289,326	$ 23,871,559
Assessment Ratio	10%	10%	10%	10%	10%	10%	10%	10%	10%
Equalization Multiplier	3.2234	3.2234	3.2234	3.2234	3.2234	3.2234	3.2234	3.2234	3.2234
Psrk Rate	0.3300%	0.3300%	0.3300%	0.3300%	0.3300%	0.3300%	0.3300%	0.3300%	0.3300%
Taxes to from the Development	$ 20,841	$ 21,362	$ 21,896	$ 22,443	$ 23,005	$ 23,580	$ 24,169	$ 24,773	$ 25,393

Year 10	Year 11	Year 12	Year 13	Year 14	Year 15	Year 16	Year 17	Year 18	Year 19	Year 20
$ 15,179,929	$ 15,559,428	$ 15,948,413	$ 16,347,124	$ 16,755,802	$ 17,174,697	$ 17,604,064	$ 18,044,166	$ 18,495,270	$ 18,957,652	$ 19,431,593
$ 9,288,418	$ 9,520,629	$ 9,758,645	$ 10,002,611	$ 10,252,676	$ 10,508,993	$ 10,771,718	$ 11,041,011	$ 11,317,036	$ 11,599,962	$ 11,889,961
$ 24,468,348	$ 25,080,056	$ 25,707,058	$ 26,349,734	$ 27,008,478	$ 27,683,690	$ 28,375,782	$ 29,085,176	$ 29,812,306	$ 30,557,613	$ 31,321,554
10%	10%	10%	10%	10%	10%	10%	10%	10%	10%	10%
3.2234	3.2234	3.2234	3.2234	3.2234	3.2234	3.2234	3.2234	3.2234	3.2234	3.2234
0.3300%	0.3300%	0.3300%	0.3300%	0.3300%	0.3300%	0.3300%	0.3300%	0.3300%	0.3300%	0.3300%
$ 26,028	$ 26,678	$ 27,345	$ 28,029	$ 28,730	$ 29,448	$ 30,184	$ 30,939	$ 31,712	$ 32,505	$ 33,317

McNaughton Devleopment
Enclave of Highland Fields
Fiscal Impact Analysis
School Children

First Floor Master Suites Models

Grades K-8

Type of Unit	Number of Units	Standard Ratio of Children/Uni	Adjustment Factor for Geriatric Home Design	Adjusted Ratio	Total Children
1-Bedroom	0	0.019	0%	0.019	0.000
2-Bedroom	13	0.022	75%	0.006	0.072
3 Bedroom - Master Down	7	0.542	75%	0.136	0.949
4-Bedroom	0	0.828	0%	0.828	0.000
Total K-8 Children Produced					1.020

Grades 9-12

Type of Unit	Number of Units	Standard Ratio of Children/Uni	Adjustment Factor for Geriatric Home Design	Adjusted Ratio	Total Children
1-Bedroom	0	0.019	0%	0.019	0.000
2-Bedroom	13	0.024	75%	0.006	0.078
3 Bedroom - Master Down	7	0.184	75%	0.046	0.322
4-Bedroom	0	0.360	0%	0.360	0.000
Total 9-12 Children Produced					0.400

Total Children Produced **1.420**

McNaughton Devleopment
Enclave of Highland Fields
Fiscal Impact Analysis
School District 204 Cost
Cost Assumptions

Operational Cost Per Student	$ 20,028	
Annual Inflationary Index		
2016	240.01	
2017	245.12	2.13%
2018	251.11	2.44%
2019	255.66	1.81%
2020	258.811	1.23%
2021	270.97	4.70%
Five-Year Average		2.46%

McNaughton Devleopment
Enclave of Highland Fields
Fiscal Impact Analysis
School District 107 Cost
Cost Assumptions

Operational Cost Per Student $ 17,281

Annual Inflationary Index

2016	240.01	
2017	245.12	2.13%
2018	251.11	2.44%
2019	255.66	1.81%
2020	258.811	1.23%
2021	270.97	4.70%

Five-Year Average 2.46%

McNaughton Devleopment
Enclave of Highland Fields
Fiscal Impact Analysis
School District 204
Cost Per Student Projection

	Year 1	Year 2	Year 3	Year 4	Year 5	Year 6	Year 7
Total Annual Number of Students	0.40	0.40	0.40	0.40	0.40	0.40	0.40
Total Operational Cost Per Student	$ 20,028	$ 20,521	$ 21,027	$ 21,545	$ 22,076	$ 22,619	$ 23,176
Total Incremental Costs of Students to SD 204 from Development	$ 8,011	$ 8,209	$ 8,411	$ 8,618	$ 8,830	$ 9,048	$ 9,271

McNaughton Devleopment
Enclave of Highland Fields
Fiscal Impact Analysis
School District 204
Cost Per Student Projection

	Year 8	Year 9	Year 10	Year 11	Year 12	Year 13	Year 14
Total Annual Number of Students	0.40	0.40	0.40	0.40	0.40	0.40	0.40
Total Operational Cost Per Student	$ 23,747	$ 24,332	$ 24,932	$ 25,546	$ 26,175	$ 26,820	$ 27,481
Total Incremental Costs of Students to SD 204 from Development	$ 9,499	$ 9,733	$ 9,973	$ 10,218	$ 10,470	$ 10,728	$ 10,992

McNaughton Devleopment
Enclave of Highland Fields
Fiscal Impact Analysis
School District 204
Cost Per Student Projection

	Year 15	Year 16	Year 17	Year 18	Year 19	Year 20
Total Annual Number of Students	0.40	0.40	0.40	0.40	0.40	0.40
Total Operational Cost Per Student	$ 28,158	$ 28,851	$ 29,562	$ 30,290	$ 31,036	$ 31,801
Total Incremental Costs of Students to SD 204 from Development	$ 11,263	$ 11,540	$ 11,825	$ 12,116	$ 12,414	$ 12,720

McNaughton Devleopment
Enclave of Highland Fields
Fiscal Impact Analysis
School District 107
Cost Per Student Projection

	Year 1	Year 2	Year 3	Year 4	Year 5	Year 6	Year 7
Total Annual Number of Students	1.02	1.02	1.02	1.02	1.02	1.02	1.02
Total Operational Cost Per Student	$ 17,281	$ 17,707	$ 18,143	$ 18,590	$ 19,048	$ 19,517	$ 19,998
Total Incremental Costs of Students to SD 107 from Development	$ 17,627	$ 18,061	$ 18,506	$ 18,962	$ 19,429	$ 19,907	$ 20,398

McNaughton Devleopment
Enclave of Highland Fields
Fiscal Impact Analysis
School District 107
Cost Per Student Projection

	Year 8	Year 9	Year 10	Year 11	Year 12	Year 13	Year 14
Total Annual Number of Students	1.02	1.02	1.02	1.02	1.02	1.02	1.02
Total Operational Cost Per Student	$ 20,490	$ 20,995	$ 21,512	$ 22,042	$ 22,585	$ 23,141	$ 23,711
Total Incremental Costs of Students to SD 107 from Development	$ 20,900	$ 21,415	$ 21,942	$ 22,483	$ 23,037	$ 23,604	$ 24,186

McNaughton Devleopment
Enclave of Highland Fields
Fiscal Impact Analysis
School District 107
Cost Per Student Projection

	Year 15	Year 16	Year 17	Year 18	Year 19	Year 20
Total Annual Number of Students	1.02	1.02	1.02	1.02	1.02	1.02
Total Operational Cost Per Student	$ 24,295	$ 24,894	$ 25,507	$ 26,136	$ 26,779	$ 27,439
Total Incremental Costs of Students to SD 107 from Development	$ 24,781	$ 25,392	$ 26,017	$ 26,658	$ 27,315	$ 27,988

Argianas & Associates INC.
CELEBRATION 30

Headquarters
5509 Belmont Road, Suite A
Downers Grove, IL 60515

630-390-0113 Phone
630-390-0114 Fax
www.argianas.com

Downtown Chicago Office
200 W. Jackson Boulevard, Suite 1050
Chicago, IL 60606

November 21, 2022

John Barry, Vice President Development
McNaughton Development Co.
11S220 Jackson Street, Suite 101
Burr Ridge, IL 60527

Argianas 08-397-22, Real Estate Consulting Services - Comparison of sale prices involving houses in developments adjacent to both attached and detached home developments as related to a proposed McNaughton Development Co. planned for 11731 W. 87th St, Burr Ridge, IL

Dear Mr. Barry:

At your request, I prepared a comparison study of sale prices involving houses in developments both adjacent and not adjacent to attached home developments within the subject's area/near area.

Purpose: Comparison of sale prices involving houses in developments adjacent to attached home developments, and those not, relating to proposed development of 11731 W. 87th St, Burr Ridge, IL.

Intended Use: To assist the client/ intended user, McNaughton Development, LLC with research efforts regarding attached and detached home developments as related to proposed residential construction planned for 11731 W. 87th St, Burr Ridge, IL. Reliance on Argianas' findings by others for any other purpose or value dates in unauthorized. Neither our findings, nor any reference to our firm may be included or quoted in any offering circular or registration statement, sales brochure, prospectus, or other agreement or document without our prior written consent, Copyright 2022 Argianas & Associates, Inc.

Scope of Services: Our consulting services have included research and analysis in formulation of a credible comparison of sales prices and $/SF unit prices involving houses in near immediate proximity to attached home developments vs. prices for similar homes except no proximity to attached homes. Our samplings were derived from various Burr Ridge/near surrounding areas.

Data & Analysis - We researched and analyzed residential sales within the following subdivisions/neighborhoods: **I. <u>Proximity to Attached Home Developments (Five Different Subdivisions)</u>**

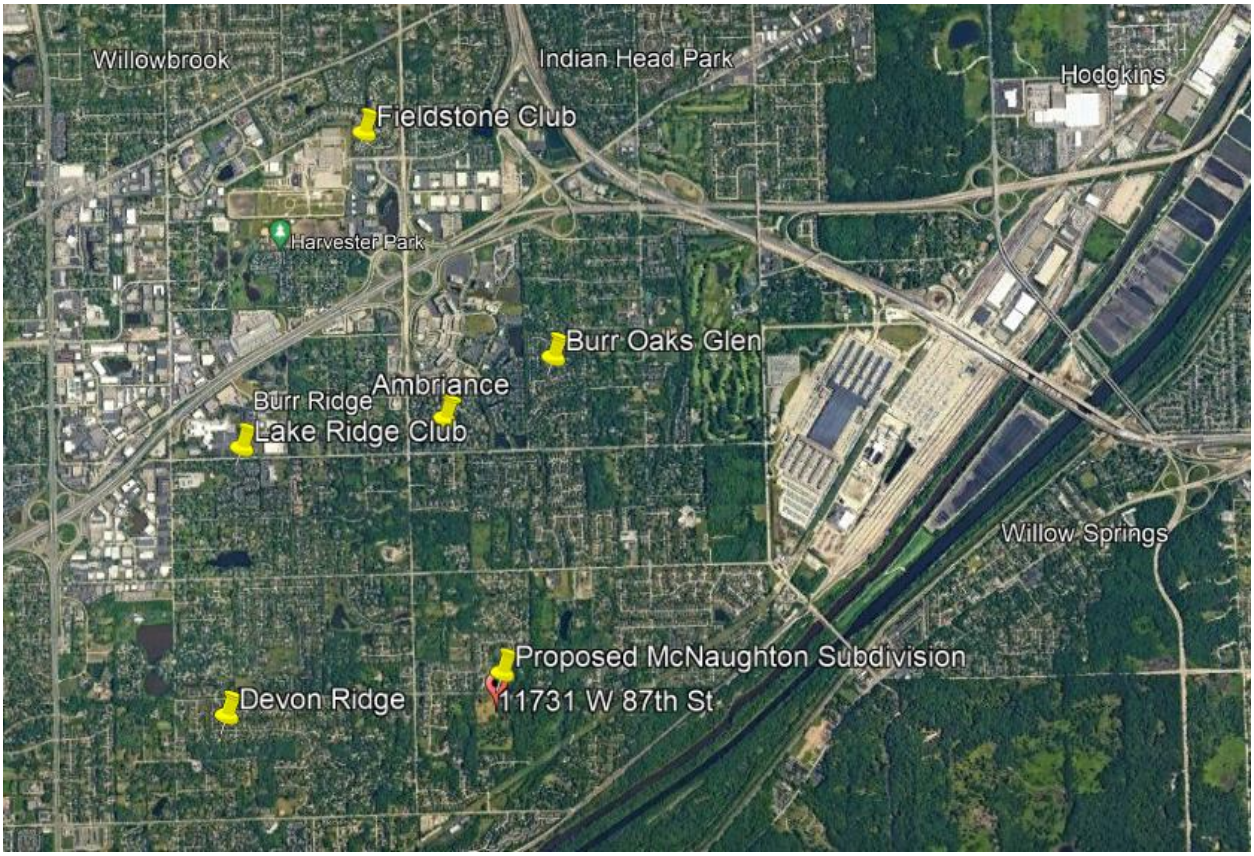

<u>a) Ambriance, Burr Ridge</u> (Proximity to SFR Development): Four (4) sales of homes in a development adjacent to an attached home subdivision (Chasemoor), as follows:

1) 804 Ambriance Dr. sold 01/2022 for $1,140,000 or $200.70 /SF
2) 603 Ambriance Dr. sold 01/2022 for $1,425,000 or $272.31 /SF
3) 406 Ambriance Dr. sold 03/2022 for $1,480,000 or $203.77 /SF
4) 305 Ambriance Dr. sold 11/2021 for $1,800,000 or $295.42 /SF

Average Ambriance Unit Price: $243.05/SF

<u>b) Burr Oaks Glen Neighborhood, Burr Ridge</u> (Proximity to an Attached SFR Development): Five (5) sales of homes in a development adjacent to an attached home neighborhood (Savoy Club), as follows:

1) 11512 Woodglen Ln. sold 08/2022 for $585,000 or $194.48 /SF.
2) 7644 Ridgewood Ln., sold 04/2022 for $745,000 of $241.02 /SF.

3) 11700 Briarwood Ln. sold 01/2022 for $784,000 or $172.11 /SF.
4) 7609 Woodland Ln. sold 03/2022 for $895,000 or $211.25 /SF.
5) 7544 Ridgewood Ln. sold 07/2022 for $915,000 or $227.55 /SF.

Average Burr Oaks Glen Unit Price: $209.29/SF

c) Devon Ridge Neighborhood, Burr Ridge (Proximity to an Attached SFR Development): Two (2) sales of homes in a development proximate to an attached home neighborhood (Oak Creek Club).

1) 620 Devon Dr., sold 11/2021 for $625,000 or $140.13 /SF.
2) 136 Circle Ridge Dr. sold 04/2022 for $981,000 $233.51 /SF.

Average Devon Ridge Unit Price/SF: $186.22/SF

d) Fieldstone Club (Proximity to an Attached SFR Development): Six (6) sales of homes in a development with an adjacent attached home neighborhood (Fieldstone).

1) 6902 Fieldstone Dr. sold 08/2022 for $774,000 or $222.07 /SF
2) 6870 Fieldston Dr. sold 04/2022 for $840,000 or $254.46 /SF
3) 6758 Fieldstone Dr. sold 05/2022 for $850,000 or $236.70 /SF
4) 6887 Fieldstone Dr. sold 10/2021 for $856,000 or $269.77 /SF
5) 6935 Fieldstone Dr. sold 03/2022 for $1,275,000 or $222.74 /SF
6) 6838 Fieldstone Dr. sold 05/2022 for $1,716,836 or $424.85 /SF

Average Fieldstone Club Unit Price: $271.77/SF

e) Lake Ridge Club, Burr Ridge (Proximity to an Attached SFR Development): Two (2) sales of homes in a development with surrounding homes of inferior lot size and lesser quality:

1) 3 Berkshire Ln. sold 08/2022 for $625,000 or $216.26 /SF.
2) 30 Lancaster Ct. sold 10/2021 for $655,000 or $231.45 /SF

Average Lake Ridge Club Unit Price: $223.85/SF - This is a competing development bounded by homes of smaller lot sizes/ lesser quality homes.

These five (5) Burr Ridge area residential subdivisions either are neighboring or adjacent to attached home subdivisions of lesser quality homes on smaller sites. These developments were analyzed in order to indicate $/SF unit prices as a form of comparison to other developments without neighboring attached homes. Our research within these five developments involved 19

sales ranging in price square foot from $140.13 to $424.85/SF, with the overall average price /SF calculated at $251.12/SF.

Other: We also considered 35 Lakeside Pointe sales that were reported in MLS data at/near $326/SF of building area; however, we understand these properties sold as price levels closer to $343/SF based upon numbers derived from actual closing statements.

In addition to our review of the Lakeside Pointe development we also looked at the Savoy Club as the most recent cluster development prior to Lakeside and the Burr Ridge Club which was Burr Ridge's first cluster development dating back to the late 1970's. Our review of recent sales indicates Savoy Club selling at an average of $325/ SF and Burr Ridge Club selling from $335 to $515/ SF. The homes at Lakeside Pointe, Savoy Club and the Burr Ridge Club sell at a premium per square foot cost compared to traditional single-family home that we reviewed for this study.

We are also aware of nine (9) additional sales not reported in the MLS that reportedly sold at/near $312/SF; however, the $/SF sale price for these transactions was closer to $336/SF. Finally, we are also aware of sale activity within Highland Fields, where only two (2) sales occurred over the last 12 months, with the prices for these homes ranging from $285 to $310/SF.

II. No Proximity to Attached Home Developments (Three Different Subdivisions)



a) Arrowhead Farm, Burr Ridge (Not Immediately Proximate to an Attached SFR Development): One (1) sale of a home in a development having no proximity to an attached home development, as follows: 8472 Arrowhead Farm Dr. sold 05/2022 for $1,202,500 or $214.50 /SF

b) Madison Club, Burr Ridge (Not Immediately Proximate to an Attached SFR Development): Four (4) home sales in a development having no proximity to an attached home development

1) 8649 Timber Ridge Dr., sold 08/2021 for $1,160,000 or $246.59 /SF
2) 804 Lakeview Ln., sold 12/2021 for $1,510,000 or $267.39 /SF
3) 812 Lakeview Ln. sold 1/2021 for $1,600,000 or $296.29 /SF
4) 8549 Timber Ridge Dr. sold 07/2022 for $1,725,000 or $303.39 /SF

Average Madison Club Unit Price: $279.16 /SF

c) Bridle Path, Burr Ridge (Not Immediately Proximate to an Attached SFR Development): Two (2) home sales in a development having no proximity to an attached single family home development

1) 8204 Greystone Ct. sold 06/2019 for $1,080,000 or $252.33 /SF
2) 8236 Greystone Ct. sold 05/2019 for $1,188,000 or $192.70 /SF

Average Bridle Path Unit Price: $222.51 /SF - This is a competing development that is bounded by homes of smaller lot size and lesser quality homes.

Conclusion: Three (3) residential developments in Burr Ridge not having neighboring or immediately adjacent to attached home developments and with lesser quality homes on smaller sites were analyzed. Samplings from these three developments involved 7 sales showing a high to low range in price square foot of $306.39 to $192.70 and with the overall average $/SF price indicated at $238.72 /SF.

III. Final Analysis

The average overall price /SF of homes having proximity to attached homes was calculated to be $251.12. The average overall price /SF for homes with no proximity to attached homes was shown to be lower, at $238.72. As can be seen, the data do not support a value loss to existing homes based on location near/ immediately proximate to attached homes or for lesser quality homes on larger lots. Put differently/based upon our research, we conclude that small houses should sell at higher price levels per square foot as compared to those at Highland Falls.

I personally viewed the sampling properties and have concluded no discernable difference in pricing for Burr Ridge area houses with and without proximity to attached homes. We concluded

attached vs. detached homes within the subject's near area do not suggest measurable value enhancements or diminutions due to attached/detached home subdivision proximity.

ARGIANAS & ASSOCIATES, INC.



Charles G. Argianas, MAI
President & Chief Appraiser Certified General Real Estate Appraiser
Illinois License # 553.000164
License Expires September 30, 2023

CERTIFICATION

I certify that to the best of my knowledge and belief - the statements of fact contained in this report are true and correct.

- The reported analyses, opinions, and conclusions are limited only by the reported assumptions and limiting conditions and are my personal, impartial, and unbiased professional analyses, opinions, and conclusions.
- I have no present or prospective interest in the property that is the subject of this report and no personal interest with respect to the parties involved.
- I have no bias with respect to the property that is the subject of this report or to the parties involved with this assignment.
- My engagement in this assignment was not contingent upon developing or reporting predetermined results.
- My compensation for completing this assignment is not contingent upon the development or reporting of a predetermined value or direction in value that favors the cause of the client, the amount of the value opinion, the attainment of a stipulated result, or the occurrence of a subsequent event directly related to the intended use of this market research.
- My analyses, opinions, and conclusions were developed, and this report has been prepared in conformity with the Uniform Standards of Professional Appraisal Practice.
- I visited the area including the property that is the subject of this report.
- The Appraiser accepts full professional responsibility and liability for the market research services and report
- The Appraiser has personally performed, and/or has supervised and approved any material market research services performed by others.
- The Appraiser is an independent contractor and is not an employee, partner, principal or agent of the client or intended user(s).
- Unless otherwise stated, no one provided significant real property market research assistance to the person signing this certification.
- The reported analyses, opinions, and conclusions in this report have been prepared in conformity with the requirements of the Code of Professional Ethics & Standards of Professional Appraisal Practice of the Appraisal Institute.
- The use of this report is subject to the requirements of the Appraisal Institute relating to review by its duly authorized representatives.
- As of the date of issuance of this market research I have completed the continuing education program of the Appraisal Institute.

- I have performed no services as an appraiser or in any other capacity regarding the property that is the subject of this report over the three-year period immediately preceding acceptance of this assignment.



Charles G. Argianas
Certified General Real Estate Appraiser
Illinois License # 553.000164
License Expires September 30, 2023

ASSUMPTIONS AND LIMITING CONDITIONS

I have no present or contemplated future interest in the property appraised nor any personal interest or bias on the subject matter or the parties involved in the market research.

No responsibility is assumed for matters legal in nature. No investigation has been made of the title to or any liabilities against the property appraised. The market research presumes, unless otherwise noted, that the owner's claim is valid, the property rights are good and marketable, and there are no encumbrances, which cannot be cleared through normal processes.

To the best of our knowledge, all data set forth in this report are true and accurate. Although gathered from reliable sources, no guarantee is made nor liability assumed for the accuracy of any data, opinions, or estimates identified as being furnished by others, which have been used in formulating this analysis.

The value estimate contained within this report specifically excludes the impact of structural damage or environmental contamination resulting from earthquakes or other causes. It is recommended that the reader of this report consult a qualified structural engineer and/or industrial hygienist for the evaluation of possible structural/environmental defects, the existence of which could have a material impact on market value.

Land areas and descriptions used in this market research were obtained from public records and have not been verified by legal counsel or a licensed surveyor. The land description is included for identification purposes only and should not be used in a conveyance or other legal document without proper verification by an attorney.

No soil analysis or geological studies were ordered or made in conjunction with this report, nor were any water, oil, gas, coal, or other subsurface mineral and use rights or conditions investigated. Substances such as asbestos, urea-formaldehyde foam insulation, other chemicals, toxic wastes, or other potentially hazardous materials could, if present, adversely affect the value of the property. Unless otherwise stated in this report, the existence of hazardous substance, which may or may not be present on or in the property, was not considered by the appraiser in the development of the conclusion of fair market value. The stated value estimate is predicated on the assumption that there is no material on or in the property, which would cause such a loss in value. No responsibility is assumed for any such conditions, and the client has been advised that the appraiser is not qualified to detect such substances, quantify the impact on values, or develop the remedial cost.

No environmental impact study has been ordered or made. Full compliance with applicable federal, state, and local environmental regulations and laws is assumed unless otherwise stated, defined, and considered in this report. It is also assumed that all required licenses, consents, or

other legislative or administrative authority from any local, state, or national government or private entity organization either have been or can be obtained or renewed for any use which the report covers.

Plats are presented only as aids in visualizing the property and its environment. Although the material was prepared using the best available data, it should not be considered as a survey or scaled for size. It is assumed that all applicable zoning and use regulations and restrictions have been complied with unless a nonconformity has been stated, defined, and considered in the market research report. Further, it is assumed that the utilization of the land and improvements is within the boundaries of the property described and that no encroachment or trespass exists unless noted in the report.

I have made a field visit of the property and noted visible physical defects, if any, in our report. This visit was made by individuals generally familiar with real estate and building construction; however, these individuals are not architectural or structural engineers who would have detailed knowledge of building design and structural integrity. Accordingly, I do not opine on, nor do I accept responsibility for the structural integrity of the property including its conformity to specific governmental code requirements, such as fire, building and safety, earthquake, and occupancy, or any physical defects which were not readily apparent to the appraisers during their visit.

The value or values presented in this report are based upon the premises outlined herein and are valid only for the purpose or purposes stated.

The date of value to which the conclusions and opinions expressed apply is set forth in this report. Unless otherwise noted, this date represents the last date of our field visit of the property. The value opinion herein rendered is based on the status of the national business economy and the purchasing power of the U.S. dollar as of that date.

Financial operating statements, if provided, were assumed accurate and complete.

Testimony or attendance in court or at any other hearing is not required by reason of this market research unless arrangements are previously made within a reasonable time.

One or more of the signatories of this market research report is a member or candidate of the Appraisal Institute. The Bylaws and Regulations of the Institute require each member and candidate to control the use and distribution of each market research report signed by them.

Possession of this report or any copy thereof does not carry with it the right of publication. No portion of this report (especially any conclusion to use, the identity of the appraiser or the firm with which he/she is connected, or any reference to the Appraisal Institute, or the designations awarded by this organization) shall be disseminated to the public through prospectus,

advertising, public relations, news, or any other means of communication without the written consent and approval of Argianas & Associates, Inc.

All opinions as to values stated are presented as the appraiser's considered opinion based on the information set forth in the report. I assume no responsibility for changes in market conditions or for the inability of the owner to obtain financing or to locate a purchaser at the appraised value. I do not warrant that the subject property will sell at our final conclusion of value.

The Americans with Disabilities Act (ADA) became effective January 26, 1992. I have not made a specific compliance survey and analysis of this property to determine whether or not it is in conformity with the various detailed requirements of the ADA. It is possible that a compliance survey of the property together with a detailed analysis of the requirements of the ADA could reveal that the property is not in compliance with one or more of the requirements of the act. If so, this fact could have a negative effect upon the value of the property. Since I have no direct evidence relating to this issue, I did not consider possible noncompliance with the requirements of ADA in estimating the value of the property.

Unless the time frame is shorter under applicable law, any legal action or claim relating to the market research or Appraiser's services shall be filed in court (or in the applicable arbitration tribunal, if the parties to the dispute have executed an arbitration agreement) within two (2) years from the date of delivery to Client of the market research report to which the claims or causes of action relate or, in the case of acts or conduct after delivery of the report, two (2) years from the date of the alleged acts or conduct. The timeframe stated in this section shall not be extended by any delay in the discovery or accrual of the underlying claims, causes of action or damages. The timeframe stated in this section shall apply to all noncriminal claims or causes of action of any type.

Legal claims or causes of action relating to the market research are not transferable or assignable to a third party, except (i) as the result of a merger, consolidation, sale or purchase of a legal entity, (ii) with regard to the collection of a bona fide existing debt for services but then only to the extent of the total compensation for the market research plus reasonable interest, or (iii) in the case of market research performed in connection with the origination of a mortgage loan, as part of the transfer or sale of the mortgage before an event of default on the mortgage or note or its legal equivalent.

It is assumed that the property follows all applicable federal, state and local laws, ordinances, regulations, building standards, use restrictions, and zoning unless the lack of compliance is stated in the market research report. Determining and reporting on such compliance were not part of the scope of work for this assignment.

It is assumed that all water, sewer facilities and utilities (whether existing or proposed) are or will be in good working order, are safe for use, and are or will be sufficient to serve the current or proposed uses of the subject property or any structures or other improvements. Determining and reporting on such matters were not part of the scope of work for this assignment.

Use of or reliance on this market research or market research report, regardless of whether such use or reliance is known or authorized by the appraiser, constitutes acknowledgement and acceptance of these general assumption and limiting conditions, any extraordinary assumptions or hypothetical conditions, and any other terms and conditions stated in this report.

GENERAL SERVICE CONDITIONS

The services provided by Argianas & Associates, Inc., have been performed in accordance with professional market research standards. Our compensation was not contingent in any way upon our conclusions of value. I assumed, without independent verification, the accuracy of all data provided to us. I have acted as at an independent contractor. All files, workpapers or documents developed by us during the engagement are our property. I will retain this data for at least five years.

Our report is to be used only for the purpose stated herein; any use or reliance for any other purpose, by you or third parties, is invalid. You may show our report in its entirety to those third parties who need to review the information contained herein. No reference to our name or our report, in whole or in part, in any document you prepare and/or distribute to third parties may be made without our written consent. Argianas will remain the owner of all copyrights © to the work product developed as part of this engagement and has licensed the use of the work product to the client/intended users for the intended use stated in the engagement letter and/or market research report.

I reserve the right to include your company/firm name in our client list, but I will maintain the confidentiality of all conversations, documents provided to us, and the contents of our reports, subject to legal or administrative process or proceedings. These conditions can only be modified by written documents executed by both parties.

QUALIFICATIONS OF APPRAISER

CHARLES G. ARGIANAS, MAI, JD

ARGIANAS & ASSOCIATES, INC.

PRESIDENT/CHIEF APPRAISER

Experience

Mr. Argianas specializes in the appraisal of all types of large institutional quality properties on a national basis. He has been involved in the valuation of several billion dollars' worth of real property. He has also appraised proposed, stabilized, and distressed property situated in most U.S. major tier as well as numerous second and third-tier markets. Mr. Argianas has also appraised or provided investment analysis for properties located in Hawaii, Canada and Mexico.

Major properties appraised by Mr. Argianas have included Chicago's mixed-use retail and office Water Tower Place, the 1,250,000 SF Chicago Mercantile Exchange Building, Chicago's 845,000 SF Quaker Tower, the Chicago area's Oak Brook Mall, two 500,000 SF twin office towers in downtown Philadelphia, and Los Angeles' 4,600,000 SF Arco Towers Plaza & 700,000 SF Chase Plaza. Other engagements have included countless and existing and proposed Holiday Inns, LaQuinta Inns, Days Inns, Embassy Suites, Ramada Inns, and Radisson, Hilton, Hyatt, Marriott, and Westin hotels and resorts on a nationwide basis.

A representative list of nationwide portfolios that Mr. Argianas has appraised or provided specialized investment analysis input (including senior MAI direction and final and full executive/professional review responsibility for services provided) have included a nationwide portfolio of 17 regional shopping centers for a large pension fund; a portfolio of 11 large downtown Chicago office buildings for a large real estate developer; a portfolio of 35 investment grade properties for a large Minneapolis insurance company; a 9 property office building portfolio with most of the properties located in downtown Pittsburgh; a portfolio of 27 hotels located throughout the U.S.; a portfolio of 13 hotels for a large Connecticut based pension fund; a portfolio of 15 nursing homes located throughout the Midwest; a portfolio of several large, major industrial parks located in California; a 13 building suburban Chicago-located office/warehouse park; and a portfolio of 80 mini-storage warehouses located throughout the south and southwestern U.S. Mr. Argianas has also either appraised or provided investment analysis cash flow projections for special-purpose properties that have included congregate-care facilities, hypermarket shopping centers, subsidized housing facilities, a well-known horse racetrack located in Kentucky, and large golf courses. In addition, Mr. Argianas has extensive experience in valuing large tracts of vacant land on the wholesale/developmental approach premise.

Property interests he has appraised include fee simple, leased fee, leasehold, and partial interests. The purposes of these appraisals have been for internal asset management and decision-making

purposes, domestic financing, international financing, condemnation, ad valorem, and syndication due diligence support. In addition to market value opinions, he has also provided feasibility, marketability, and highest and best use studies for a 1,600,000 SF proposed downtown Chicago office building, a 1,280,000 SF proposed super-regional shopping center located in California, cineplex multiscreen movie theaters, and multi-property portfolios on a nationwide basis.

Education

John Marshall Law School - Chicago, Illinois
Juris Doctor of Law (1986)
Elmhurst College - Elmhurst, Illinois
Bachelor of Science, Business Administration (1977)

Professional Affiliations/Designations

Member, Appraisal Institute MAI #8167
Member, 1981-1995 American Society of Appraisers ASA, Real Property - Urban, ASA #00502700
Member, 1992, 1993, 1994, and 1995 Appraisal Institute National Research and Information Committee
Trustee, Appraisal Institute Education Trust, 2013-2016
Past Member, American Bar Association (ABA) #09971021
Past Member, ABA Forum on the Construction Industry
Past Member, Chicago Bar Association Real Estate Law Committee
Past Member, ABA, Section of Urban, State and Local Government Law
Member, Illinois Chapter of The Appraisal Institute 1991 Legislative and State Activities Committee
Past Member, Chicago Board of Realtors
Past Member, Chicago Bar Association
Past Member, International Association of Assessing Officers #ARG1A606010011
Past Member, International Council of Shopping Centers, Member #0125539
Past Member, Institute of Property Taxation
Past Member, National Council of Real Estate Investment Fiduciaries (NACREIF)
Past Member, Pension & Real Estate Association (PREA)
Past Member, Urban Land Institute
Past Member, National Association for Senior Living Industries
Past Member, Illinois Association of Certified Real Estate Appraisers
Regional Panel Member, 1992, 1993, 1994, and 1995 Appraisal Institute Ethics and Counseling Panel
Past Member, Chicago Bar Association Real Estate Taxation Committee

Real Estate Appraisal State Licenses

Arizona	Certified General Real Estate Appraiser, License #30944
California	Certified General Real Estate Appraiser, License #AG011909
Georgia	Certified General Real Property Appraiser, License #239169
Illinois	Certified General Real Estate Appraiser, License #553.000164
Indiana	Certified General Appraiser, License #CG69201384
Iowa	General Real Property Appraiser, Certificate #CG01460

Kentucky	Certified General Real Property Appraiser, License # 002415
Michigan	Certified General Appraiser, License #1201002546
New Jersey	Certified General Real Estate Appraiser, License #42RG0026300
New York	Real Estate General Appraiser, License #46000032068
Ohio	General Certified Real Estate Appraiser, License #000385948
Pennsylvania	General Appraiser, License #GA-000914-R
Texas	Certified General Real Estate Appraiser, License #TX-1322694-G
Wisconsin	Certified General Appraiser, License #402- 010

Other Professional Licenses

Licensed Attorney, State of Illinois, 1986
Licensed Real Estate Managing Broker, State of Illinois License #471.008014

Court Testimony/Expert Witness Experience

Qualified real estate subject matter expert before courts in Arizona, California, Illinois, Indiana, Iowa, Michigan, Missouri, Nevada, Ohio, Pennsylvania, and Wisconsin. Mr. Argianas has provided testimony at an Army Corps of Engineers, has served as panel chair arbitrator on complex real estate-related disputes involving properties in Illinois, North Carolina, South Carolina, Tennessee, and Virginia, and has served as a court-appointed real estate receiver.

Other

Keynote Panelist, 1992 Haztech International Environmental Conference,

Pittsburgh, Pennsylvania

Roundtable Discussion Leader, 1992 International Council of Shopping Centers

Financial Management Conference, New Orleans, Louisiana

In addition, Mr. Argianas has written or contributed to various publications that include The Appraisal Journal, The National Law Journal, Forbes, The National Real Estate Investor, Valuation Magazine, Building Profit, The Chicago Tribune, The Chicago Sun Times, and Chicago Crain’s Business Weekly.

Enclave of Highland Fields
Phase & Development Schedule
November 9, 2022

Phasing

Development work within the subdivision will be conducted in a single phase

- Site Area of +/- 15.23 Acres
- Total Number of Units: 20
- Total Gross Density: 1.31 Units/ Acre
- Total Gross Land Area/ Unit: 33,165 Square Foot of Land Area/ Unit
- Public Facilities to be developed in the single phase include Conservation Easements with Public Access Easements over Outlots E, F & G

Estimated Development and Construction Schedule

Site Development

- Site Preparation April 1, 2023
    - Home demolition
    - Site clearing
    - Installation of tree protection and silt fencing
- Earthwork/ Site Balance – Model Home Construction April 15, 2023
    - Excavation of the entire storm water detention basin
    - Construct building pads and rough grade roadway
    - Commence construction on three model homes
- Underground Site Utilities June 1, 2023
    - Installation of sanitary sewer and connect to village infrastructure
    - Installation of subdivision storm sewer system including storm water detention volume control
    - Installation of water main
- Site Paving August 1, 2023
    - Installation of curbs, base and binder pavement private on-site roadway
- Site Landscape and Amenities September 1, 2023
    - Construction of subdivision entry monumentation
    - Common area landscaping along 87th Street including monumentation planting, 87th Street buffer planting, irrigation system
    - Planting of storm water detention naturalize plantings
    - Installation of common area path system. Areas to be determined.
    - Common area landscaping within Outlot B and around the homes will be completed with the landscaping of the individual homes

PREPARED BY AND MAIL TO:

McNaughton Development, LLC.
11S220 Jackson Street
Burr Ridge, IL 60527
(630) 325-3400

DECLARATION OF COVENANTS, CONDITIONS AND RESTRICTIONS OF:

Enclave of Highland Fields

DRAFT 11/9/2022

Common Address: **11713 W 87th Street, Burr Ridge, IL 60527**
PIN: **23-06-100-005-0000**

TABLE of CONTENTS

ARTICLE 1—DEFINITIONS **4**

ARTICLE 1. SECTION 1: "ASSOCIATION" 4
ARTICLE 1. SECTION 2: "BUILDER" 4
ARTICLE 1. SECTION 3: "COMMITTEE" 4
ARTICLE 1. SECTION 4: "COMMON AREAS" 4
ARTICLE 1. SECTION 5: "DECLARANT" 5
ARTICLE 1. SECTION 6. "DECLARATION" 5
ARTICLE 1. SECTION 7: "DEVELOPER" 5
ARTICLE 1. SECTION 8: "LOT" 5
ARTICLE 1. SECTION 9: "OWNER" 5
ARTICLE 1. SECTION 10: "SUBJECT PROPERTY" 5
ARTICLE 1. SECTION 11: "VILLAGE" 5
ARTICLE 1. SECTION 12: "PLAT" 5

ARTICLE 2—SERVITUDE FOR OWNERS **6**

ARTICLE 2. SECTION 1: "UTILITY EASEMENT" 6
ARTICLE 2. SECTION 2: "MAINTENANCE" 6
ARTICLE 2. SECTION 3: "SERVITUDE FOR ASSOCIATION" 7
ARTICLE 2. SECTION 4: "SERVITUDE FOR DECLARANT AND DEVELOPER" 7
ARTICLE 2. SECTION 5: "SALES AND CONSTRUCTION OFFICES" 7
ARTICLE 2. SECTION 6: "MAINTENANCE SERVITUDE" 8
ARTICLE 2. SECTION 7: "INSURANCE AND RESTORATION" 8

ARTICLE 3—MEMBERSHIP AND VOTING RIGHTS **8**

ARTICLE 3. SECTION 1: "MEMBERSHIP" 8
ARTICLE 3. SECTION 2: "CLASSES OF VOTING MEMBERSHIP" 9

ARTICLE 4—COVENANTS FOR PROPERTY ASSESSMENTS **9**

ARTICLE 4. SECTION 1: "CREATION OF LIENS AND PERSONAL OBLIGATION FOR ASSESSMENTS" 9
ARTICLE 4. SECTION 2: "PURPOSE OF ASSESSMENTS" 10
ARTICLE 4. SECTION 3: "COMPUTATION OF ASSESSMENTS" 11
ARTICLE 4. SECTION 4: "DATE OF COMMENCEMENT OF ANNUAL ASSESSMENTS" ("DUE DATES") 13
ARTICLE 4. SECTION 5: "EFFECT OF NONPAYMENT OF ASSESSMENTS-REMEDIES OF THE ASSOCIATION" 13
ARTICLE 4. SECTION 6: "SUBORDINATION OF THE LIEN TO FIRST MORTGAGE" 13
ARTICLE 4. SECTION 7: "EXEMPT PROPERTY" 13

ARTICLE 5—ARCHITECTURAL REVIEW COMMITTEE **14**

ARTICLE 5. SECTION 1: "PURPOSE" 14
ARTICLE 5. SECTION 2: "COMMITTEE" 14
ARTICLE 5. SECTION 3: "REVIEW PROCESS" 14
ARTICLE 5. SECTION 4: "EXEMPT PROPERTY" 15

ARTICLE 6—INTENTIONALLY OMITTED

ARTICLE 7---INTENTIONALLY OMITTED

ARTICLE 8—COMMUNITY CONTROL **16**

ARTICLE 8. SECTION 1: "NUISANCES" 16
ARTICLE 8. SECTION 2: "DEVELOPMENT ACTIVITY" 16
ARTICLE 8. SECTION 3: "PARKING OR KEEPING OF VEHICLES 17
ARTICLE 8. SECTION 4: "GARBAGE AND REFUSE DISPOSAL" 17

ARTICLE 8. SECTION 5: "MANUFACTURING"....17
ARTICLE 8. SECTION 6: "UTILITIES"....17

ARTICLE 9—VARIATION AND DEPARTURES....17

ARTICLE 10—EXTERIOR MAINTENANCE....17

ARTICLE 10. SECTION 1: "DRAINAGE"....17
ARTICLE 10. SECTION 2: "EXEMPT PROPERTY"....18

ARTICLE 11—INTENTIONALLY OMITTED

ARTICLE 12—GENERAL PROVISIONS....18

ARTICLE 12. SECTION 1: "INSURANCE "....18
ARTICLE 12. SECTION 2: "MANAGEMENT"....18
ARTICLE 12. SECTION 3: "REMEDIES"....19
ARTICLE 12. SECTION 4: "LAND TRUSTS"....20
ARTICLE 12. SECTION 5: "AMENDMENTS"....20
ARTICLE 12. SECTION 6: "NOTICES"....21
ARTICLE 12. SECTION 7: "SEVERABILITY"....21
ARTICLE 12. SECTION 8: "RIGHTS AND OBLIGATION"....21
ARTICLE 12. SECTION 9: "NOTICE OF SALE"....21
ARTICLE 12. SECTION 10: "HEADLINES"....21
ARTICLE 12. SECTION 11: "CONFLICTS"....21
ARTICLE 12. SECTION 12: "PERPETUITIES AND RESTRAINTS ON ALIENATION"....22

ARTICLE 13—NOTICE OF DECLARATION....22

ARTICLE 14—DECLARANT DISCLOSURE....22

EXHIBIT A – LEGAL DESCRIPTION....27

EXHIBIT B – PLAT OF SUBDIVISION....28

EXHIBIT C – ARCHITECTURAL REVIEW FORM....29

EXHIBIT D – NOTICE TO CONTRACTORS....30

EXHIBIT E – TRANSFER OF OWNERSHIP....31

EXHIBIT F - BIORETENTION AREA LONG TERM MAINTENANCE PLAN
EXHIBIT G - ROLLING KNOLLS HOMEOWNER'S ASSOCIATION PRELIMINARY BUDGET
EXHIBIT H - PARK PLAN
EXHIBIT I - BRIDGE PLAN
EXHIBIT J - BURR RIDGE PARK ASSOCIATION MAP

ENCLAVE OF HIGHLAND FIELDS
DECLARATION OF

COVENANTS, CONDITIONS AND RESTRICTIONS

THIS DECLARATION made on the date hereafter set forth by McNaughton Development, LLC., an Illinois corporation, 11S220 Jackson Street, Burr Ridge, IL 60527:

WHEREAS, McNaughton Development, LLC., hereafter "Declarant," is the fee simple title holder of that certain real property in Burr Ridge, Cook County, Illinois, more particularly described on Exhibit "A" attached hereto and made a part hereof ("Subject Property"); and

WHEREAS, Declarant intends to subject the Subject Property to certain covenants, conditions, restrictions, easements, charges and liens hereinafter set forth, each and all of which are for the benefit of the Association (hereafter defined); and

WHEREAS, Declarant deems it desirable for the efficient preservation of the values and amenities of the Subject Property to create the Association to administer and enforce the covenants, conditions and restrictions, and to collect and disburse the assessments and charges hereinafter created.

NOW THEREFORE, Declarant hereby declares that the Subject Property shall be held, sold and conveyed subject to the following covenants, conditions, restrictions, easements, charges and liens which are to protect the value and desirability of the Subject Property, and which shall run with the Subject Property and be binding on and inure to the benefit of all parties having any right, title or interest in the described properties or any part thereof, their heirs, successors and assigns.

ARTICLE 1—Definitions

Article 1. Section 1: "Association" shall mean and refer to the Enclave of Highland Fields Homeowner's Association, a corporation to be formed under the General Not-For-Profit Corporation Act of Illinois, its successors and assigns.

Article 1. Section 2: "Builder" shall mean a purchaser of a lot, its successors and assigns, whose intention is to construct a single-family dwelling for resale and not his own occupancy.

Article 1. Section 3: "Committee" shall mean and refer to The Architectural Review Committee (ARC).

Article 1. Section 4: "Common Areas" shall mean Outlots _____ on the recorded Plat (hereafter defined) of subdivision, and any other improvements already constructed/installed, or to be constructed/installed per the approved Final Engineering

Plans, prepared by DesignTek Engineering, LLC, dated _____, last revised and formally approved by the Village of Burr Ridge _____ (with the exception of sanitary sewer and potable water improvements, which shall be publicly dedicated), per the approved Final Landscape Plan, prepared by Metz & Company, dated _____, last revised and formally approved by the Village of Burr Ridge _____, per the Park Plan attached hereto as EXHIBIT H, and per the community wide Irrigation Plan. The Common Areas shall be owned in fee simple title by the Association (along with the improvements constructed or to be constructed thereon), and the Association shall have all the incidents of fee simple title ownership over these areas, including but not limited to obligations of general maintenance, repair and replacement, maintenance of liability insurance and payment of real estate taxes.

Article 1. Section 5: "Declarant" shall mean and refer to McNaughton Development, LLC. For purposes of this Declaration, the term Declarant and Developer shall be used interchangeably.

Article 1. Section 6. "Declaration" shall mean this instrument together with the exhibits attached and made a part hereof and shall include such amendments, if any, to this instrument as may from time to time be adopted pursuant to the terms hereof. This Declaration may be referred to in any other document as the Enclave of Highland Fields Declaration of Covenants, Conditions, and Restrictions.

Article 1. Section 7: "Developer": shall mean and refer to McNaughton Development, LLC. For purposes of this Declaration, the term Developer and Declarant shall be used interchangeably.

Article 1. Section 8: "Lot" shall mean and refer to a portion of the Subject Property shown on the recorded Plat of subdivision that is improved or intended to be improved with one single-family residence. The "Lots" are those portions of the Subject Property that are designated on the recorded Plat of subdivision as Lots 1 through and including 20.

Article 1. Section 9: "Owner" shall mean and refer to the record owner after transfer from the Declarant, whether one or more persons or entities, of fee simple title to any Lot which is a part of the Property. For purposes of this Section, holders of beneficial interest under land trust holding title to any residential lot which is a part of the Property shall be considered Owner.

Article 1. Section 10: "Plat" shall mean the Plat of subdivision for Enclave of Highland Fields recorded in Cook County, Illinois, on _____ as Document number _____.

Article 1. Section 11: "Subject Property" shall mean and refer to the Subject Property as more fully described in Exhibit "A".

Article 1. Section 12: "Village" shall mean the Village of Burr Ridge.

Article 1. Section 13: "Enclave of Highland Fields Homeowner's Association Preliminary Budget" shall mean the budget attached to this Declaration as Exhibit G. This budget is informational and subject to change. The Declaration need not be amended to modify the budget.

ARTICLE 2—Servitude for Owners

Article 2. Section 1: "Utility Easement" The Lots are subject to utility easements for sanitary sewer, storm sewer, water, gas, electricity, telephone and any other necessary utilities. Said easements shall be (or may have been) created by and described on the plat of subdivision affecting the property.

Blanket Easement and Encroachments. The Common Area is subject to a blanket public utility and drainage easement. The Plat allows for permissible encroachments into the Common Area of decks, patios, etc. 15' around the Lots, which permissible encroachments shall be referred to as the Encroaching Improvement. The individual lot Owner shall have an easement over the Encroaching Improvement for the use and enjoyment of the Encroaching Improvement. Declarant and Developer make no representations as to the exact location of public utilities that are installed within the blanket easement. Precise locations of buried cable, pedestals, transformers, and utility facilities in general are not determined by the Developer or Declarant, but by the service provider. In some cases, buried cable may lie within the 15' permissible encroachment area around the lots. Developer and Declarant shall not be responsible in the event that Encroaching Improvements lie over, adjacent, or proximate to electric, Comcast, AT&T, NICOR, or other service provider's service lines, cables, etc. Developer and Declarant shall not be responsible for required alterations, demolitions, repairs, maintenance, restoration, etc. to an Encroaching Improvement that may be required because a public utility requires access to a facility that may lie under, adjacent, or proximate to an Encroaching Improvement.

Article 2. Section 2: "Routine Common Area Maintenance" The Association shall be responsible for routine maintenance of the Common Areas necessary to cultivate a maintenance free lifestyle for the homeowners. This routine common area maintenance shall include, but not be limited to:

i. Snow plowing of Heritage Drive and sidewalks along Heritage Drive, driveways (including the apron/approach), and front walks;

ii. Re-mulching as necessary during the start of the landscape season (in April or May);

iii. Start-up in spring, and shutoff in fall of lawn irrigation systems;

iv. Landscape maintenance during the landscape season including lawn sprinkling, lawn cutting, landscape trimming and maintenance, and leave raking and collection in the front yard;

v. Maintenance of entry gate, entry monument signage, landscaping, mulching, emergency gate, etc., if Declarant decides, in its sole discretion, to construct these and other like improvements as a part of an entry-monument feature of the subdivision.

Article 2. Section 3: "Long-Term Common Area Maintenance, Repair and Replacement" The Association shall be responsible for long-term maintenance, repair, and replacement of the Common Areas, including, but not limited to:

i. The asphalt street, striping, pavers, entry and emergency gates, simulated bridge feature, curb and gutter, parking areas, parkways (green space between the curb and sidewalk), street lights and the sidewalks along Heritage Drive.
ii. The Outlots_____.
iii. Long-term maintenance and monitoring of all naturalized plantings within Outlot_____ (the "Detention Areas") per the maintenance standards as set forth by Cook County Ordinance (MWRD) and included as EXHIBIT F.
iv. Subdivision storm sewer installed pursuant to the final engineering plans, including pipe, structures, restrictors, flared-end sections, rip rap, dry creek beds, and other storm sewer related facilities (does not include individual house sump discharge lines or downspout extenders).
v. The walking paths to be installed by Owner-Contractor within Outlot ___.
vi. All other improvements included in the definition of Common Areas as noted in Article 1. Section 4 of this Declaration, and any improvements now existing or to be later constructed in the Common Areas, with the exception of sanitary sewer and potable water improvements, which shall be dedicated to the Village.

Article 2. Section 4: "Servitude for Association" There is hereby reserved a general right and servitude for the benefit of the Association, its directors, officer, agents and employees, including but not limited to any manager employed by the Association and any employees of such manager, to enter upon any Lot in the performance of their respective duties. Except in the event of emergencies, this servitude is to be exercised whenever practicable only upon advance notice to the Owner of the Lot directly affected thereby or a member of the Association Board of Directors.

Article 2. Section 5: "Servitude for Declarant and Developer" During the period that Declarant owns any lot in the subdivision, Declarant shall have an alienable and transferable real right and servitude on, over, though, under and across the Lots for installing, maintaining, repairing and replacing any improvements to the Subject Property or as are contemplated by this Declaration.

Article 2. Section 6: "Sales and Construction Offices" Notwithstanding any provisions or restrictions herein to the contrary, there is hereby reserved for the benefit of Declarant, its

successors and assigns, the alienable and transferable right and servitude in and to the Property for the operation and/or maintenance of signs, sales offices, construction offices, business offices and model dwellings, together with such other facilities as in the sole opinion of Declarant may be required, convenient, or incidental to the completion, improvement and/or sale of Lots for so long as Declarant owns any Lot primarily for the purpose of sale or owns any part of the Subject Property.

Article 2. Section 7: "Maintenance Servitude" There is hereby reserved for the benefit of Declarant, the Association, and their respective agents, employees, successors and assigns an alienable, transferable and perpetual right and servitude to enter upon any Lot for the purpose of removing, cutting or pruning underbrush, weeds, stumps or other unsightly growth, mowing of grass and removing trash and debris, so as to maintain a reasonable standard of health, fire safety and appearance within the Subject Property, provided that such servitude is not in violation of any Codes or Ordinances, does not violate terms stated in the Declaration of Covenants, Conditions and Restrictions with regard to such servitude conducted upon any easement and does not impose any duty or obligation upon Declarant or the Association to perform any such actions.

The Village shall have the (i) right but not the obligation to enter upon any lot or the common area for the purpose of required maintenance in the event of an Association default, (ii) the corresponding right to lien all of the lots in the subdivision for the purposes of securing the Association's obligation to repay the City for its maintenance expenditures.

Article 2. Section 8: "Insurance and Restoration"

(A) Insurance. Prior to the commencement of any work permitted pursuant to this Article 2, the party performing such work shall provide to the Owner or Owners of the Subject Property, or any portion thereof on which such work is to be performed, reasonable evidence of workers compensation and general liability insurance insuring such Owner or Owners and any of its mortgagees against claims for death, personal injury and property damage in reasonable coverage and amounts.

(B). Restoration. In the event any party performs any work pursuant to the rights granted under this Article 2, said party shall, upon completion thereof, restore the Subject Property or any portion thereof upon which such work was performed to its condition prior to the commencement of such work. All parties performing such work shall do so in a manner which is least disruptive to the Owners of the Subject Property or portions thereof upon which such work is being performed.

ARTICLE 3—Membership and Voting Rights

Article 3. Section 1: "Membership" Every Owner of any Lot in whole or in part, shall automatically be a member of the Association and shall remain one so long as they

remain an Owner of Lots or subject hereto. Membership shall be appurtenant to and may not be separated from ownership of any Lot. Upon termination of an Owner's interest in the Subject Property, such membership shall thereupon automatically terminate and transfer and inure to the new Owner succeeding in interest.

Article 3. Section 2: "Classes of Voting Membership" The Association shall have two classes of voting membership.

(A) Class A. Class A members shall be all Owners, except Declarant, and shall be entitled to one vote for each Lot owned. When more than one person holds an interest in any Lot, all such persons shall be a Class A member. The vote for such Lot shall be exercised as they among themselves determine, but in no event shall more than one vote be cast with respect to any one Lot. However, until such time as the Class B membership terminates, the Class B member shall have the sole vote, provided the Class B members cannot materially alter the rights and obligations of the Class A members to their detriment. After the Class B membership terminates, a majority of the Class A vote will be required on all matters covered in this Declaration, unless expressly to the contrary within the Declaration.

(B) Class B. The Class B member shall be the Declarant and shall have the sole vote, provided the Class B member cannot materially alter the rights and obligations of the Owners to their substantial detriment. Declarant shall be entitled to one vote per Lot owned by Declarant and retain the same rights as a Class A member upon the termination of the Class B membership. The Class B membership will be considered terminated upon the happening of any of the following events, whichever occurs earliest:

(1) Ten (10) years after the date the first Lot is conveyed by Declarant to another Owner; or

(2) Upon the date of written notice by Declarant to the Association, electing to terminate the Class B membership

Declarant shall be the Committee (See Article 5 below) until the termination of the Class B membership as stated above.

ARTICLE 4—Covenants for Property Assessments

Article 4. Section 1: "Creation of Liens and Personal Obligation for Assessments" Each Class A member (except as otherwise specifically provided by the provisions of Article 4, Section 7 hereof), by acceptance of a deed therefore or otherwise, whether or not it shall

be so expressed in such deed or other conveyance, hereby covenants and agrees and shall be deemed to covenant and agree to pay to the Association for each Lot owned (or to a management company or other collection agency designated by the Association): (1) assessments or charges to be paid on the first day of each month (hereinafter called "Operating Assessment") or in such other installments as the Board of Directors of the Association (hereinafter referred to as "Board"), shall elect and (2) assessments to be paid once at closing and from time to time thereafter as may be determined appropriated by the Association (hereinafter called "Special Assessments"). Special Assessments shall be established and collected by the Association. The Operating and Special Assessments shall be established and collected by the Association.

The Operating and Special Assessments, together with such interest thereon and costs of collection thereof, including, but not limited to reasonable attorneys' fees, as hereinafter provided, shall also be the continuing personal obligation of the person who was the Owner of such Lot at the time when the said Assessment fell due.

Article 4. Section 2: "Purpose of Assessments"

(A) Owners' Operating Assessments. The Operating Assessment represents each Owner's proportionate share of the expenses of maintenance, repair, replacement, administration and operation of the Common Areas (both routine Common Area maintenance, and long-term Common Area maintenance, repair and replacement as described in Article 2, Section 2 & 3 of this Declaration). This includes but is not limited to maintenance, repair and replacement to sanitary sewer and potable water facilities until they are conveyed/deeded to the Village. Said expenses shall be known as "Operating Expenses." Operating Assessments will be levied by the Association and used exclusively to promote the health, safety and welfare of the Owners and for the purposes of the Association as provided by this Declaration. To the extent, if at all, that any Operating Assessments for any fiscal year are not expended by the Association, any such savings shall be applied by the Association in reduction of its budget and the annual assessments to the Owners for the following year.

(B) Reserve Fund. All Owners shall at the time of closing be assessed for six (6) months of Assessments which sum shall be set aside in the Reserve Fund. Said Reserve Fund shall be drawn on by the Association in the event there is a shortcoming of Operating Assessments to reasonable cover the Operating Expenses or there is a need to finance any unexpected expenses not covered by the Operating Assessments. If such Reserve Fund is depleted or, in the opinion of the Board, significantly reduced, then any supplemental budget, or the next Operating Assessment requirements, shall provide for re-establishment of such Reserve

Fund as the Board shall deem reasonably appropriate. Any such assessment for the Reserve Fund shall be levied equally per Lot against each Owner. Any interest of any Owner in and to such Reserve Fund shall automatically transfer and inure to such Owner's successor in interest.

(C) Owners' Special Assessments. Special Assessments shall be collected from all Owners from time to time as the Association may find necessary. The Special Assessment as levied by the Association is only for the purpose of defraying, in whole or in part, any unexpected expenses not covered by the Operating Assessments in that given year.

Special Assessments in excess of a total of One Thousand Dollars ($1,000.00) per lot, annually in any assessment year shall require the consent of two-thirds (2/3) of the vote of each class of members who are voting in person or by proxy at a meeting duly called for such purpose. Failure of an owner to vote shall not constitute consent to such increase. The Owner as of the date of any levy of a Special Assessment shall be personally liable for such Assessment.

Article 4. Section 3: "Computation of Assessments" Payments of assessments shall be in such amounts and at such times as provided below:

(A) The Operating Assessment shall be $425.00 per month per Lot, unless otherwise stated herein. The Enclave of Highland Fields Homeowner's Association Preliminary Budget is attached hereto as EXHIBIT G. This budget is attached for reference purposes, and is subject to change.

(B) On or before each November 1st, the Board shall estimate that total amount necessary to pay the cost of taxes, wages, materials, insurance, services and supplies for maintenance and operation and such other items as provided for herein and in the Bylaws of the Association, if any, which will be required during the ensuing calendar year for the rendering of all services, together with a reasonable amount necessary for Reserve Fund for contingencies and replacements, and shall on or before December 1st of each year notify each Owner in writing as to the amount of such estimate with reasonable itemization thereof. Declarant shall have the right to reasonably increase the Operating Assessments as may be necessary to properly finance the Operating Expense, as long as said increase is for the benefit of the Owners and the promotion of the health, safety and welfare of the Owners.

All obligations of the Owners hereunder, including but not limited to the Operating Assessment, Special Assessments or other levies by the

Association pursuant to this Declaration or the Bylaws of the Association, if any, shall be determined according to the calculations shown as follows: The percentage of the total annual assessment levied by the Association which is payable by each Owner shall be divided by the 20 lots which comprise the Association. If said estimated cash requirement proves inadequate, for any reason, to defray the Operating Expenses during any given year, then the Board of Directors shall be authorized to adopt a supplemental budget or budgets and shall adjust the assessment accordingly.

The Board of Directors shall serve notice of such further or adjusted assessments on all Owners by a statement in writing, giving the amount and reasons therefore, and such further or adjusted assessment shall become effective with the next maintenance payment. Any increase in the Operating Assessment in excess of seven (7) percent of the approved assessments must be approved by two-thirds (2/3) of each class of members voting in person or by proxy at a meeting duly called for such purposes.

(C) With regard to any Lot owned by Declarant and Lots upon which homes are being constructed or have been completed and title has not been conveyed by Declarant, no Operating Assessments, Reserve Fund Fee or Special Assessment shall be required or collected. However, in the event Declarant enters into a lease or installment contract for any Lot, then Declarant shall be responsible for the payment of the Operating Assessment on those Lots on the same basis as any other Owner as provided in this Article 4.

(D) The failure or delay of the Board to prepare or serve the annual or adjusted estimate or the itemized accounting or other document on the Owner shall not constitute a waiver or release in any manner of such Owner's obligation to pay the maintenance cost, necessary reserves or adjusted assessments as herein provided whenever the same shall be determined, and in the absence of any annual estimate of adjusted estimate, the Owner shall continue to pay the maintenance charge at the then existing biannual rate established for the previous period until notice of the next maintenance payment which is due more than thirty (30) days after such annual or adjusted estimate shall have been mailed or delivered.

(E) The Board shall keep full and correct books of account in chronological order of the receipts and expenditures affecting the Property, specifying and itemizing the maintenance and repair expenses of the Property and any other expenses incurred. Such records shall be available for inspection by any Owner or first mortgagee of record, at such reasonable time or times during normal business hours as may be requested by the Owner or mortgagee.

(F) No Owner may waive or otherwise escape liability for the Operating or Special Assessments provided for herein.

Article 4. Section 4: "Date of Commencement of Annual Assessments" ("Due Dates") Operating Assessments provided for herein shall commence for all Lots on the first day of the month following the conveyance to a third party from Declarant. The first monthly assessment of Four Hundred and twenty-five and 00/100ths ($425.00) Dollars per Lot shall be adjusted according to the number of days remaining in the calendar month after the date of conveyance.

Except otherwise provided in this document, an Owner on the first day of any month shall be personally liable for the monthly Operating Assessment (hereinafter referred to as Due Date). The Association shall, upon demand at any time, furnish a certificate in writing signed by an Officer of the Association setting forth whether the Operating and Special Assessments on a specified Lot have been paid. A reasonable charge may be made by the Board of Directors for the issuance of these certificates. Such certificates shall be conclusive evidence of payment of any Assessment therein stated to have been paid.

Article 4. Section 5: "Effect of Nonpayment of Assessments-Remedies of the Association" Any Assessments which are not paid by Owner when due shall be delinquent. If the Assessment is not paid within thirty (30) days after the Due Date, a late charge of 50% of the monthly assessment per month will be collected for each month following the Due Date in which the Operating Assessments go unpaid, and the Association may proceed in equity to foreclose the assessment lien (which foreclosure shall follow mortgage proceedings then in force and effect and selected by the Association) and/or bring an action at law against the Owners of the Lot and interest costs and reasonable attorney's fee for any such action(s) shall be added to the amount of such Operating Assessment and judgment.

Article 4. Section 6: "Subordination of the Lien to First Mortgage" The Lien of any Assessment provided for herein shall be subordinate to the lien of any institutional first mortgage on a lot recorded prior to the date upon which such Assessment became due, and a decree of foreclosure under such mortgage or any proceeding or conveyance in lieu of foreclosure thereof shall not extinguish the lien of all such Assessments which become due prior to such sale or transfer. No sale or transfer shall relieve such Lot from liability for any Assessments thereafter becoming due or from the lien thereof.

Article 4. Section 7: "Exempt Property" The following property subject to this Declaration shall be exempt from the Assessments created herein:

(A) Lots or any other portions of the Subject Property dedicated to and accepted by a local public authority.

(B) Lots and any portions of the Subject Property owned by Declarant.

Once an exemption is created pursuant to this Article 4. Section 7, it shall continue until such time as a conveyance is made to an Owner, at which time the exemption created hereunder shall cease and said Lot shall be subject to all terms and conditions of this Declaration.

ARTICLE 5—Architectural Review Committee

Article 5. Section 1: "Purpose" The purpose of the Architectural Review Committee ("Committee") is to maintain the high quality and desirability of the Lots 1-20 within Enclave of Highland Fields, to aid in the preservation of its natural beauty and to protect the harmony of the development and value of the area.

Article 5. Section 2: "Committee" Declarant will create the Committee for the purposes of administering and controlling the matters set forth in this Declaration. Should the Class B members elect to turn the Committee over to Class A members before the expiration of the Class B membership, then the Class A members, prior to their empowerment, agree that all homes built or to be built by Declarant shall be exempt from Committee approval. No members of the Committee shall be entitled to any salary for serving thereon, but reasonable fees may be paid to any consultants for services rendered to the Committee.

No building, sign, fence, wall, or any other structure or facility shall be erected, placed or permitted to remain upon any Lot, including but not limited to swimming pools, outbuildings, decks, gazebos, etc., nor any change or alteration thereon, including but not limited to tree clearing, change in Lot grade, etc., shall commence, be erected or maintained upon any of the Lots until the required security deposit, applicable application fees, design, drawings, construction plans and specifications showing the nature, kind, shape, height, dimensions, materials, color, elevation, location and grade of the same have been submitted and approved in writing by the Committee.

Article 5. Section 3: "Review Process" The following application information and fees shall be submitted to the Committee and, until Class A members control the Committee submittals, will be made to Declarant or as otherwise directed by the Class B member. The information will then be distributed to the various Committee members for their review. The Committee shall have five (5) business days in which to respond. The application for architectural review shall include two copies of each of the following items:

(A) Cover Letter-addressed to the Architectural Committee requesting final approval of house plans, identifying lot location, number and street address and providing any other pertinent information relevant to assisting the Committee in their review. A sample form is included as (Exhibit "C.")

(B) Lot Layout Drawing-shall identify the location and dimensions of the structure, access; front, side and back setbacks from exterior lot lines; grading contours; driveway location and dimensions and materials; location and dimensions of all utility easements or lines.

(C) Exterior Design Working Elevation Drawings-shall include elevations and complete dimensions of all sides of the proposed structure. Elevations shall be traditional in design. Plans shall be submitted in the size of 8-1/2" x 11".

(D) Floor Plan Working Drawings-shall include all levels of the structure with dimensions.

(E) Building Size Calculations-shall outline building heights, exterior building dimensions of outside walls, total building square footage (see Article 6, Section 2), and dimension and square footage of garage (include number of vehicles accommodated).

(F) Explanation of exterior color scheme, or samples if required.

(G) Application Fee shall be in the amount of $200.00 per application and made payable to Declarant. No fee shall be required for homes being built by Declarant.

(H) The architectural committee shall not review the plan unless all assessments currently due for the lot are paid in full.

(I) The review by architectural committee is intended to insure compliance with the declaration of covenants and restrictions of the subdivision. In no way does approval by the committee verify compliance to any local or state building, zoning or engineering codes.

Once final approval of the application information has been granted by the Committee and the applicable reviews completed by other consultants, a letter of approval will be provided to the applicant and the applicant shall make the necessary submittals to The City for their review prior to the issuance of a building permit. Contact the City hall for complete information as to their submittal and time requirements and time frames.

Article 5. Section 4: "Exempt Property" The following property subject to this Declaration shall be exempt from the Architectural Review Standards of this Article 5 created herein:

(A) Lots and any portions of the Property owned by Declarant.

Once an exemption is created pursuant to this Article 5. Section 4, it shall continue until such time as a conveyance is made to an Owner, at which time the exemption created

hereunder shall cease and said Lot shall be subject to all terms and conditions of this Declaration.

Article 5. Section 5: "Anti-Monotony" Notwithstanding the Declarant exemption in Article 5. Section 4 of this Declaration, Declarant (and all Owners) shall comply with the following anti-monotony regulations:

In order to preserve the architectural and aesthetic quality of the Enclave of Highland Fields subdivision, the following anti-monotony regulations shall apply to the Declarant and Owners:

1. No less than 6 different floor plans with 2 front elevations for each plan (for a total of 12 variations) shall be offered within the Subdivision;
2. Adjacent lots (on the same side of the street) shall comply with this Section by complying with at least one or more of the following prohibitions:
    a. Adjacent lots shall not utilize the same floor plan and elevation; or
    b. Adjacent lots that utilize the same floor plan and elevation shall be required to both:
        i. Change the colors of the following building materials:
            1. Siding.
            2. Metal roof.
            3. Shingle roof.
            4. Front door.
            5. Overhead door(s), and;
        ii. Change the masonry on the home from brick to stone.
3. In no event shall the same floor plan and elevation be used on 3 adjacent lots (irrespective of color scheme or the changing the masonry from brick to stone).
4. Declarant reserves the right to offer more than 2 front elevations for each plan, and, in such case, shall provide such alternate elevations to the Village of Burr Ridge for its review and approval thereof.

ARTICLE 6—Intentionally Omitted

ARTICLE 7—Intentionally Omitted

ARTICLE 8—Community Control

Article 8. Section 1: "Nuisances" No noxious or offensive activity shall be carried on upon any Lot, nor shall anything be done thereon which may be or may become an annoyance or nuisance to the neighborhood.

Article 8. Section 2: "Development Activity" Notwithstanding any other provision herein, any Owner, including Declarant shall be entitled to conduct on the Property all activities normally associated with and convenient to the development of the Property and construction and sale of single-family residential units.

Article 8. Section 3: "Parking or Keeping of Vehicles. No vehicles are to be parked on any part of any Lot or the Common Areas, except upon driveways or within attached garages and no campers, boats, trailers, jet ski, snow mobiles, recreational vehicles and commercial vehicles and accessories may be kept on any Lot or Common Area unless the same are fully enclosed within the garage located on such Lot.

Article 8. Section 4: "Garbage and Refuse Disposal" No Lot or Common Area shall be used or maintained as a dumping ground for rubbish. Trash, garbage or other waste shall not be kept except in sanitary containers. All other equipment for the storage or disposal of such material shall be kept in a clean and sanitary condition, and there must be a dumpster on site once construction begins.

Article 8. Section 5: "Manufacturing" No part of the Property, or any Lot, and no building erected or maintained on any part of the Property shall be used for manufacturing, industrial or business purposes, except home offices.

Article 8. Section 6: "Utilities" All electric service, telephone service and other utilitity services shall be supplied by underground service and no poles shall be permitted except for temporary structures used by Declarant.

ARTICLE 9—Variation and Departures

Declarant hereby reserves the absolute unqualified right to enter into agreements with the owner or owners of any lot or lots, without the consent of the owner or owners of other lot or lots, to depart from vary any and all of the covenants set forth above, provided there are practical difficulties or particular hardships or other good and sufficient reasons by the owner making the request; and any such departure or variation, which shall be manifested by an agreement in writing, shall not constitute a waiver of any such covenant as to the other lots in the Subdivision, provided that any such departure or variation shall not result in harm or diminution in value of the Subdivision as a whole.

ARTICLE 10—Exterior Maintenance

Article 10. Section 1: "Drainage" Owner shall at all times maintain the elevations, contours and drainage patterns which have been established by the Village and by Developer's civil engineering plans, or which occur naturally, unless variations or modifications are specifically permitted by the Village.

To the extent, if at all, that any Owner shall alter the elevations, contours or drainage patterns, whether the Lot is vacant or improved, the Association may, but shall not be required to correct said elevations, contours and drainage patters; and in such event, the cost thereof shall be added to such Owner's Assessment (at the rate of three (3) times the actual cost incurred) and such amount shall be immediately due and payable and the Association shall have such rights and remedies with respect to collections of them as are herein provided for Operating Assessments.

The Village shall have the (i) right but not the obligation to enter upon any lot for the purpose of correcting any drainage violations in the event of an Association default, (ii) and in such cases, the Village would bill its costs to the Association; the Association would pay the Village and then back bill the lot owner per the methodology as noted in this Section.

Article 10. Section 2: "Exempt Property" The following property subject to this Declaration shall be exempt from the Association taking action under the terms of this Article:

(A) Lots and any portions of the Property owned by Declarant.

Once an exemption is created pursuant to this Article 10. Section 2, it shall continue until such time as a conveyance is made to an Owner, at which time the exemption created hereunder shall cease and said Lot shall be subject to all terms and conditions of this Declaration.

ARTICLE 11—Intentionally Omitted

ARTICLE 12—General Provisions

Article 12. Section 1: "Insurance " The Board shall have the authority to and may obtain comprehensive liability insurance in such limits as it shall deem desirable, and workmen's compensation insurance and other liability insurance as it may deem desirable, insuring the Association, Board, manager, and managing agent. The premiums for all insurance purchased pursuant to the provisions of this Section shall be paid at least thirty (30) days prior to the expiration date of any policy. Except as hereinabove provided, each Owner shall be responsible for obtaining fire and casualty and other types of insurance as such Owner shall deem necessary on his own Lot and the contents of his own Lot, and his additions and improvements thereto, as well as his personal liability.

Article 12. Section 2: "Management" The Association, through its Board, and Declarant, prior to its turning over the directorship to the Owners, shall have the power to employ a manager (managing agent), an independent contractor, or such other employees as it deems necessary, and to prescribe their duties and fix their compensation, and/or enter into a contract with a management company which contract shall be for a period of not more that one (1) year, renewable by agreement of the parties for successive period of not more than one (1) year each, and shall provide for the Association's right to cancel said agreement for cause upon the Association written thirty (30) day notice to the management company of its intent to do so. The Board will be elected by the Class A members once the Class B membership has been terminated as stated in Article 3. Section 2B, and will consist of three Owners in the Enclave of Highland Fields subdivision. The Board will be elected at a meeting called with 30 days advance notice. The three persons receiving the highest number of votes, in person or by proxy will be elected for a term of three (3) years. Board members may succeed themselves.

Declarant shall serve as the managing agent and receive a fee of $5.00 per lot per month to operate the homeowners association until such time as it is turned over to the Owners. Declarant reserves the right to reasonably increase this fee as may be necessary to properly operate the association for the future benefit of the Owners. This fee shall not apply to Lots owned by Declarant until such time of conveyance to an Owner.

Article 12. Section 3: "Remedies" In the event of a default by any Owner under the provisions of the Declaration, Bylaw or rules and regulations of the Association, the Board shall have each and all the rights and remedies which may be provided for in this Declaration, the Bylaws or rules and regulations, if any, and those which may be available at law or in equity, and may prosecute any action or other proceedings against such defaulting Owner and/or others for enforcement of any lien, statutory or otherwise, including foreclosure of such lien and the appointment of a receiver for the Lot and ownership interest of such Owner, or for damages or injunction, or specific performance, or for judgment for payment of money and collection thereof, or for any combination of remedies, or for any other relief. No remedies herein provided or available at law or in equity shall be deemed exclusive of any other remedy.

All expenses of the Association in connection with any such actions or proceedings, including court cost and attorney's fees and other fees and expenses, and all damages, liquidated or otherwise, together with interest thereon at the maximum rate permitted by law, from the due date until paid, shall be charged to and assessed against such defaulting Owner and shall be added to and deemed part of his respective share of the Operating Expenses (to the same extent as the lien provided herein for unpaid assessments), upon the Lot and upon all of his additions and improvements thereto, and upon all of his personal property upon the Lot. Any and all of such rights and remedies may be exercised at any time and from time to time, cumulatively or otherwise, by the Association or the Board. All the provisions of this instrument and those in the Articles of Incorporation and Bylaws of the Association are mutually enforceable by and among the members of the Association. Any member who feels that a provision is being violated may petition the Association to investigate the situation. Should the Association determine that this allegation is true and that corrective action should be taken, the Association shall take whatever action is necessary to end the violation. Declarant or the Association shall have the right, but not the obligation, to enforce any and all provisions of this Declaration inuring to its benefit by any appropriate action in law or in equity, and shall be entitled to recover therein all expenses incurred including court costs and reasonable attorney fees.

Whenever there shall have been built (or whenever there is being built) on any Lot any Improvement or other act or inaction which is and remains in violation of the covenants above set forth, or any of them, for a minimum period of three (3) days after delivery of written notice thereof to the Owner of any such Lot, then Declarant or the Association shall have, in addition to the foregoing rights, the right to enter upon the property where such violation exists and summarily to abate or remove it at the expense of the Owner, at a rate three (3) times the actual cost and such entry and abatement or removal shall not be deemed a trespass. In addition, Declarant or the Association may assess fines up to

$500.00 against any Owner for the breach of the covenants and obligations set forth above. Each day a violation exists shall be considered a separate offense. In no event shall the failure of Declarant, the Association or the Owners to enforce any of the covenants or obligations herein provided due to a particular violation be deemed to be waiver of the right to do so respecting any such violation or any subsequent violation.

Article 12. Section 4: "Land Trusts" In the event title to any Lot should be conveyed to a land title-holding trust, under which all powers of management, operation and control of the premises remain vested in the Trust beneficiary or beneficiaries, then the trust estate under such trust, and the beneficiaries thereunder, from time to time, shall be liable for payment of any obligation, lien or indebtedness chargeable or created under this Declaration against such Lot. No claim shall be made against any such title holding trustee personally for payment of any claim, lien, or obligation hereby created, and the trustee shall not be obligated to sequesters funds or trust property to apply in whole or in part against any such lien or obligation, but the amount thereof shall continue to be a charge or lien upon the premises notwithstanding any transfers of beneficial interest in the title to such real estate. Nothing in this Section shall be deemed to alter or diminish the rights or remedies of the Association under Article 4. Section 5, relating to the failure to pay maintenance assessments as such rights or remedies apply to the trust estate under such trust and the beneficiaries thereunder.

Article 12. Section 5: "Amendments" The covenants and restrictions of this Declaration shall run with and bind the land for a term of twenty (20) years from the date this Declaration is recorded, after which time they shall be automatically extended for successive period of ten (10) years, unless seventy-five percent (75%) of the votes outstanding shall have been voted to terminate the covenants and restrictions of this Declaration upon the expiration of the initial twenty-year period or any extension thereof, which termination shall be by written instrument signed by seventy-five percent (75%) of the Owners and the Village and properly recorded in Cook County, Illinois. This Declaration may be amended during the first twenty (20) year period by an instrument signed by not less than fifty percent (50%) of the Owners, and by Declarant if the Class B membership has not theretofore terminated, and thereafter by an instrument signed by not less than fifty percent (50%) of the Owners. Any amendment must be recorded.

Notwithstanding any provisions hereof to the contrary, the Declarant may, at its sole discretion and without consent being required of anyone modify, amend, or repeal this Declaration at any time prior to the closing of the sale of all Lots, provided said amendment, modification, or repeal is in writing and properly recorded in Cook County, Illinois. Each deed, mortgage, trust deed, other evidence of obligation, or other instrument affecting title and the acceptance thereof shall be deemed to be a grant and acknowledgment of, and a consent to the reservation of, the power of the Declarant to make, execute and record an amendment.

Obligations running in favor of the Village are not subject to amendment without the Village's consent and will survive any vote to terminate the covenants at the expiration of the initial twenty-year term.

Article 12, Section 6: "Notices" Notices provided for in the Declaration or Bylaws shall be in writing and shall be addressed to the Association or to any Owner at their respective addresses. Notices addressed as above shall be deemed delivered when mailed by United States registered or certified mail, return receipt requested, or when delivered in person with written acknowledgment of the receipt thereof. During the time Declarant is managing the Association, notices should be sent to: McNaughton Development, LLC., 11S220 Jackson Street, Burr Ridge, IL 60527.

Article 12. Section 7: "Severability" Invalidation of any one of these covenants or restrictions by judgment or court order shall in no way affect any other provisions which shall remain in full force and effect.

Article 12. Section 8: "Rights and Obligation" The provisions of this Declaration and the Bylaws and the rights and obligations established thereby shall be deemed to be covenants running with the land and shall inure to the benefit of, and be binding upon, each and all of the Owners and their respective heirs, representatives successors, assigns, purchasers, grantees and mortgages.

By the recording or the acceptance of a deed conveying a Lot or any interest therein, or any ownership interest in the Lot whatsoever, the person to whom such Lot or interest is conveyed shall be deemed to accept and agree to be bound by and subject to all of the provisions of this Declaration and the Bylaws, whether or not mention thereof is made in said deed.

Article 12. Section 9: "Notice of Sale" Owner shall notify the Association of any transfer of ownership. Such notice shall be in writing and include the names of the new Owner and proof of delivery of Declaration of Covenants and Restrictions. (See attached EXHIBIT "E").

Article 12. Section 10: "Headlines" The headings contained in this Declaration are for reference purposes only and shall not in any way affect the meaning or interpretation of this Declaration. All personal pronouns used in this Declaration, whether used in the masculine, feminine or neuter gender, shall include all other genders; the singular shall include the plural, and vice versa.

Title of Articles and Sections are for convenience only, and neither limit no amplify the provisions of the Declaration unless specified reference is made to such Articles, Section or subdivisions of another document or instrument.

Article 12. Section 11: "Conflicts" In the event of any conflict between this Declaration and the Bylaws or Articles of Incorporation, the Declaration shall control. In the event of a conflict between the terms and conditions of these covenants and restrictions and those of the building codes of the Village, the more stringent shall prevail

Article 12. Section 12: "Perpetuities and Restraints on Alienation" If any option, privileges, covenants or rights created by this Declaration would otherwise be unlawful or void for violation of (a) the rule against perpetuities or some analogous statutory provision; (b) the rule restricting restraints on alienation; or (c) any other statutory or common law rules imposing time limits, then such provision shall continue only until twenty-one (21) years after the death of the now living lawful descendants of J.B. Pritzker, Governor of the State of Illinois and Joseph Biden, President of the United States of America.

ARTICLE 13-Notice of Declaration

Each lot owner who owns a lot for the purpose of constructing and selling a residence on the lot shall provide a copy of these declarations to a prospective Purchaser at the time of or before a contract is signed with a prospective Purchaser and shall receive a receipt and acknowledgement thereof satisfying the form attached as Exhibit E.

ARTICLE 14-Declarant Disclosure

Each Seller of a Lot shall disclose to the Purchaser the following:

Article 14. Section 1: Subdivision Zoning:
Village of Burr Ridge, R2B PUD Zoning.

Article 14. Section 2: Contiguous Zoning:
North – R-3 Residential Burr Ridge
East – R-1 Residential Cook County
South – SR1 Single Family Residential Willow Springs
West – R2A Residential Burr Ridge

Article 14. Section 3: Fee Simple Ownership of Common Areas: Outlots _____ (the Common Areas) shall be owned in fee simple title by the Association (along with the improvements constructed or to be constructed thereon), and the Association shall have all the incidents of fee simple title ownership over these areas, including but not limited to maintenance, repair, and replacement of the Common Areas, maintenance of liability insurance and payment of real estate taxes.

Article 14. Section 4: Private Improvements:
With the exception of potable water and sanitary sewer improvements, all of the improvements to be completed in the subdivision are private, and the Association shall be the owner of said improvements within the Common Areas, and shall be responsible for their maintenance, repair, and replacement.

Article 14. Section 5: Routine Common Area Maintenance:
The Association shall be responsible for the following items of routine maintenance within the Common Areas to cultivate a maintenance free lifestyle from the homeowners:

i). Snow plowing of Heritage Drive and sidewalk along Heritage Drive, driveways (including the apron/approach), and front walks.

ii). Re-mulching as necessary during the start of the landscape season (in April or May).

iii). Start-up in spring, and shutoff in fall of lawn irrigation systems.

iv). Landscape maintenance during the landscape season including lawn cutting, landscape trimming and maintenance, and leave raking and collection in the front yard.

v). Maintenance of entry monument signage, landscaping, mulching, etc., if Declarant decides, in its sole discretion, to construct these and other like improvements as a part of an entry-monument feature of the subdivision.

Article 14. Section 6: Long-term Common Area Maintenance, Repair and Replacement:
The Association shall be responsible for the long-term maintenance, repair and replacement of the Common Areas and the Common Area improvements to be installed pursuant to all applicable subdivision improvements, and including long-term maintenance and monitoring of all naturalized plantings within Outlot _____ (the "Detention Area") per the maintenance standards as set forth by Cook County Ordinance and included as EXHIBIT F, and the walking paths to be installed by Owner-Contractor within Outlot _____

Article 14. Section 7: Detention Areas:
After Declarant's improvement and initial 3-year maintenance period ends, no work shall be performed in the Detention Areas (beyond the scope of the maintenance and monitoring plan included as EXHIBIT F) that is not prior approved by the Owner-Contractor and the MWRD.

Article 14. Section 8: Permissible Encroachments into the Common Area:
Driveways, front walks, patios, and decks are permissible encroachments into the Common Areas (as well as any typical house protrusions such as eaves, chimneys, cantilevers, venting, vent caps, ac condensers, window wells, etc.) and the encroaching owner shall have the exclusive right of use and enjoyment of the encroaching improvement, and the sole obligation of its maintenance, repair, and replacement, notwithstanding its encroachment into the Common Area.

Article 14. Section 9: Emergency Access:
There is an emergency access located between lots _____, where emergency vehicles have a secondary access to Heritage Drive from the west. No obstructions (including structures, walls, fencing, landscaping, etc.) shall be constructed so as to interfere with access of emergency vehicles from the west to Heritage Drive, and the homeowners shall have an affirmative duty to ensure that this emergency access is maintained to allow for emergency vehicular access. There is a restrictive access easement for the benefit of emergency services over the emergency access, and general vehicular use of this access is

STRICTLY PROHBITED and subject to fines pursuant to Section Article 12. Section 3 of this Declaration.

Article 14. Section 10: Common Area Landscaping:
The Subdivision is subject to a final landscape plan, which plantings shall be installed by Declarant at its expense. No alterations to this Landscape plan shall be made without the prior written consent of the Declarant and the Village of Burr Ridge.

Article 14. Section 11: Expedition of Disclosure: Owner has received a copy of the Enclave of Highland Fields Declaration of Covenants, Conditions & Restrictions. Owner has read and agrees to comply with all of the requirements.

Article 14. Section 12: School Districts: Lots 1-20 of the Enclave of Highland Fields Subdivision are located in School District #107 (elementary and middle school – Pleasantdale) and School District #204 (high school – Lyons Township).

Purchaser acknowledges receipt of this disclosure and knowingly agrees to accept the property subject to all of the terms and conditions set forth herein. Acceptance by one owner shall be binding on all owners.

SIGNATURE PAGE TO FOLLOW

McNaughton Development, LLC., – Declarant

BY:_____
Paul McNaughton

Its:_____

STATE OF ILLINOIS)
)SS:
COUNTY OF_____)

I, _____ a Notary Public in and for the County and State aforesaid, DO HEREBY CERTIFY that _____as _____ of _McNaughton Development, LLC. is personally known to me to be the same person whose name is subscribed to the foregoing instrument and respectively appeared before me this day in person and acknowledged that he signed and delivered the said instrument as his own free and voluntary act, for the uses and purposes therein set forth applied his signature to said instrument as his own free and voluntary act, for the uses and purposes therein set forth.

GIVEN under my hand and notarial seal this _____ day of _____, 2018.

_____
Notary Public

(EXHIBIT "A") LEGAL DESCRIPTION

(EXHIBIT "B") PLAT OF SUBDIVISION

(EXHIBIT "C") ARCHITECTURAL REVIEW FORM

(EXHIBIT "D") NOTICE TO CONTRACTORS

(EXHIBIT "E") TRANSFER OF OWNERS LETTER

(EXHIBIT "F") BIORETENTION AREA LONG-TERM MAINTENANCE PLAN

(EXHIBIT "G") ENCLAVE OF HIGHLAND FIELDS HOMEOWNER'S ASSOCIATION PRELIMINARY BUDGET

(EXHIBIT "H") ~~PARK PLAN~~ CONSERVATION AREA PLAN

EXHIBIT A – LEGAL DESCRIPTION

EXHIBIT B – PLAT OF SUBDIVISION

EXHIBIT C – ARCHITECTURAL REVIEW FORM

ARCHITECTURAL REVIEW
ENCLAVE OF HIGHLAND FIELDS

Date: _____

Builder / Owner: _____

Lot #: _____

Address: _____

_____

Architect: _____ Plan #: _____

Brick Name: _____

Mortar Color: _____

Roof Color: _____

Window Color: _____

Siding Color: _____

Approved _____
McNaughton Development, LLC

Date: _____

(Office use only)

☐ Lot Layout	☐ Landscape Plans	☐ Assmts. Paid
☐ Plans	☐ Exterior Colors	☐ Fee(s)

EXHIBIT D – NOTICE TO CONTRACTORS



EXHIBIT E – TRANSFER OF OWNERSHIP

NOTICE OF TRANSFER OF OWNERSHIP

Date: _____

Purchaser: _____

Lot #: _____

_____

_____

Address: _____

Phone #: _____

_____

DECLARATION: Seller has delivered to Purchaser and Purchaser acknowledges receipt of the Declaration of Covenants, Conditions and Restrictions (The Declaration). Purchaser agrees to comply with the terms thereof including but not limited to, those provisions relating to architectural review authority of Seller, The Architectural Review Committee (The ARC), or the Homeowner's Association; and those provisions relating to payment of assessments to the Homeowner's Association for maintenance and repair of common areas in the Subdivision pursuant to the formula set forth in the Declaration, and for other specified purposes. Purchaser acknowledges that compliance with the terms of such Declaration will be mandatory and not voluntary.

_____

Purchaser(s)

EXHIBIT F – BIORETENTION AREA LONG-TERM MAINTENANCE PLAN

EXHIBIT G – ENCLAVE OF HIGHLAND FIELDS HOMEOWNER'S ASSOCIATION PRELIMINARY BUDGET

EXHIBIT H – CONSERVATION AREA PLANS

McNaughton Development LLC

The Enclave of Highland Fields
11731 W. 87th Street, Burr Ridge, Illinois

Evaluation of a proposed development according to the criteria for Zoning Map Amendments, Variations and Planned Unit Developments contained in the Burr Ridge Zoning Ordinance.

By: George V. Kisiel, AIA, AICP

Date: November 28, 2022

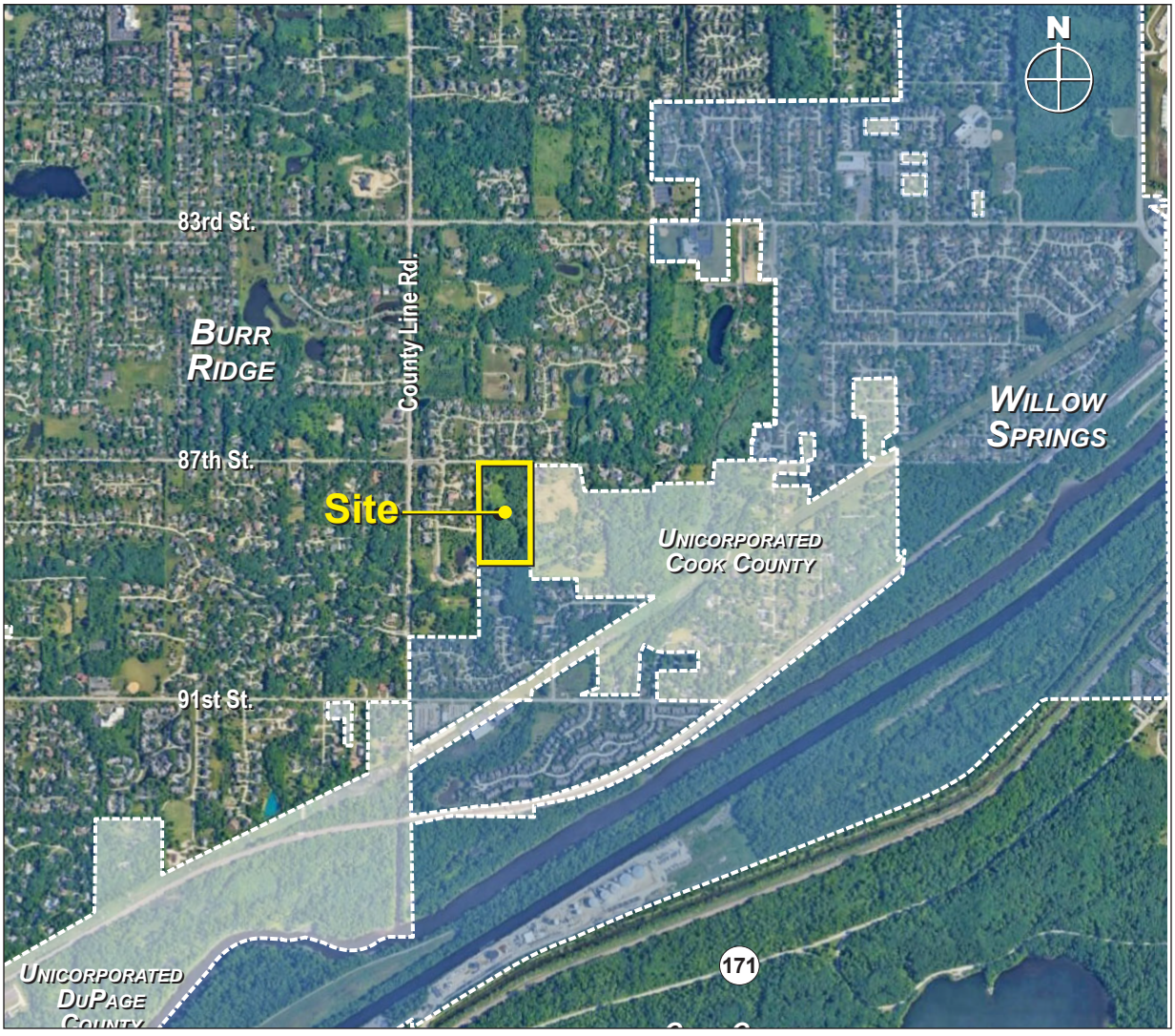

141 WEST JACKSON BOULEVARD • SUITE 4020
CHICAGO, ILLINOIS 60604 • 312 • 427 • 3000
WWW.OKRENTKISIEL.COM

I. Introduction

I am a licensed architect and a certified planner. I am a member of the American Institute of Architects, the American Planning Association, and the American Institute of Certified Planners. I am the president and owner of Okrent Kisiel Associates, Inc., where I have been employed for over 40 years. I have been accepted as an expert witness in planning and zoning in the courts of Cook, Lake, Will and DuPage Counties, Illinois and have appeared before numerous planning and administrative review boards throughout the Chicago metro area.

II. Purpose

The purpose of this report is to evaluate the proposed development with respect to the standards for Zoning Map Amendments in order to change the zoning district from R1 to R-2B PUD, and the standards for Variations to allow a Planned Unit Development on a 15.23 acre site, and the standards for Planned Unit Developments to allow a 20 unit clustered residential development including 2.13 acres of storm management and 5.25 acres of dedicated open space.

III. Conclusions

Based on my review and analysis of the subject property, its surroundings and context, the broad and local zoning and land use patterns, the planning context, the physical characteristics of the site, the development proposal, its financial and economic implications, and a traffic analysis produced by KLOA, the rezoning from R1 to R-2B PUD is appropriate for the site and location, and consistent with the required findings of fact for zoning map amendments in the Village of Burr Ridge zoning ordinance.

Given the physical characteristics of the site, the only way to develop the property economically and consistent with legitimate planning concerns is to employ a clustered development scheme that preserves natural drainage patterns and significant wooded areas on-site requiring a variation to allow such a development via a Planned Unit Development on a site less than 40 acres. Given the legitimate practical difficulty and particular hardship caused by the natural site conditions a variation to the minimum site area and lot width standards is justified according to the standards for variations contained in the Village of Burr Ridge zoning ordinance.

Finally, given the need to pursue a Planned Unit Development in order to gain approvals for a clustered development scheme, the proposed development, which retains significant amounts of natural areas, and provides additional benefits in enhanced storm management, and direct and indirect economic benefits, with little burden on Village services is consistent with the requisite findings of fact for Planned Unit Developments and Special Uses contained in the Village of Burr Ridge zoning ordinance.

IV. Background

The subject property is located in the southeastern extremity of the Village of Burr Ridge approximately 750 feet east of the intersection of County Line Road and 87th Street. It was annexed to the Village of Burr Ridge in 2005 and was subsequently zoned R1. The property is currently improved with a single family home constructed in the late 1940's near the northwest corner of the site and pre-dates the incorporation of the Village of Burr Ridge.

The Village of Burr Ridge was originally incorporated in 1956 as the Village of Harvester (International Harvester purchased 414 acres for an experimental farm facility in 1917) later changing its name to Burr Ridge in 1961 when Harvester was combined with Burr Ridge Estates. Population grew significantly from ±300 in 1960 to over 3,800 by 1980, then doubling from 1980 to 1990 to over 7,800. Current 2020 population is over 11,000.

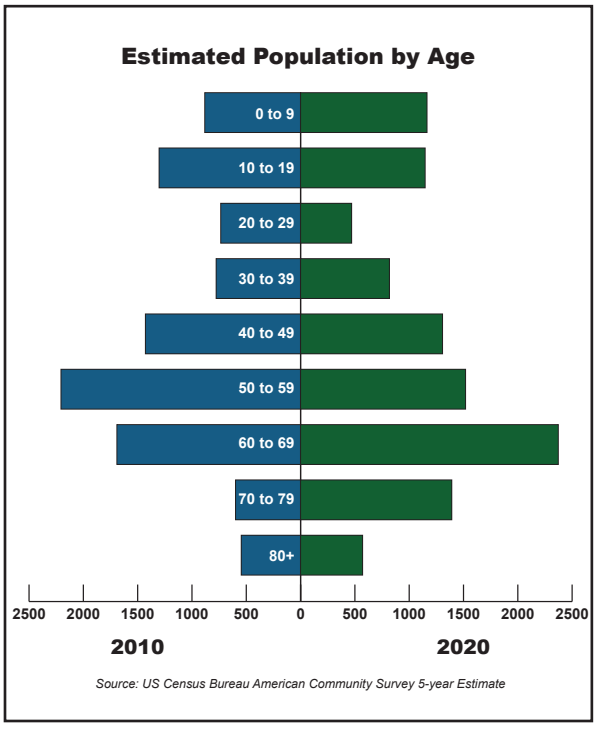

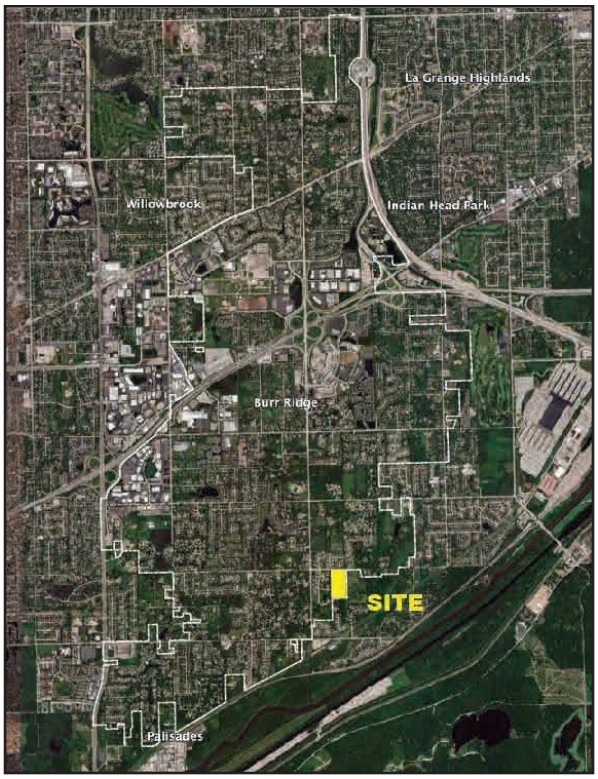

Burr Ridge's growth has been achieved through expanding their boundaries via an aggressive annexation policy through the 1990s to the present. Bur Ridge increased in area from ±1,500 acres in 1964 to nearly 4,200 acres by the turn of the century. Since then Burr Ridge has annexed an additional ±500 acres to reach nearly 4,700 acres Through these efforts Burr Ridge can be seen as currently reaching maturity in terms of its territorial boundaries and capacity for growth.

Age distribution among the Burr Ridge population indicates a large aging cohort in the 50-59 and 60-69 age ranges. Current housing stock is relative new and dominated by large lot single-family residential product with few desirable options for empty nesters or others seeking to downsize and remain in the Village of Burr Ridge.

V. Proposed Development

The subject property is rectangular in shape with ±585' of frontage o n 87th Street and a depth of ±1,150'. The site is heavily wooded and slopes west to east from a high point of 690' to a low point of 651'. The proposed clustered site plan preserves 5.25 acres in conservation areas (outlots F, G and H) and 2.13 acres reserved for storm management with ±11.5% capacity above ordinance requirements. A private Cul-de-sac road (Heritage Court) in a 40' right-of-way with a gated entry provides vehicular and pedestrian access to the development from 87th Street. A pavement width of 28 feet along with a 6 foot sidewalk on the east side of the right-of way is provided. Emergency access and redundant utility connections are provided at Heritage Drive at the southwestern portion of the site.

Gross site area is 663,360 square feet (15.23 acres) and with 20 dwelling units on site, the gross density is 33,168 square feet per dwelling unit or 1.31 DU/ac. Net site area (gross site area - roads and detention) is 494,528 (11.35 acres) for a net density of 24,725 square feet per dwelling unit or 1.76 DU/ac. Building lots are 4,560 square feet (57' x 80') with a variety of building footprints ranging from 1,982 square feet to 2,476 square feet. Lots are set back a minimum of 20' from the right-of way of Heritage Court. Total floor area for the seven different models range from 2,134 square feet to 3,419 square feet. The maximum F.A.R. on the site would be 0.13 if the largest model were chosen on each of the 20 building lots. Since a mix of models is expected the actual F.A.R. achieved will likely be less than the maximum of 0.13

As indicated above, seven models will be available for the site with between two and eight different elevation options for each model.

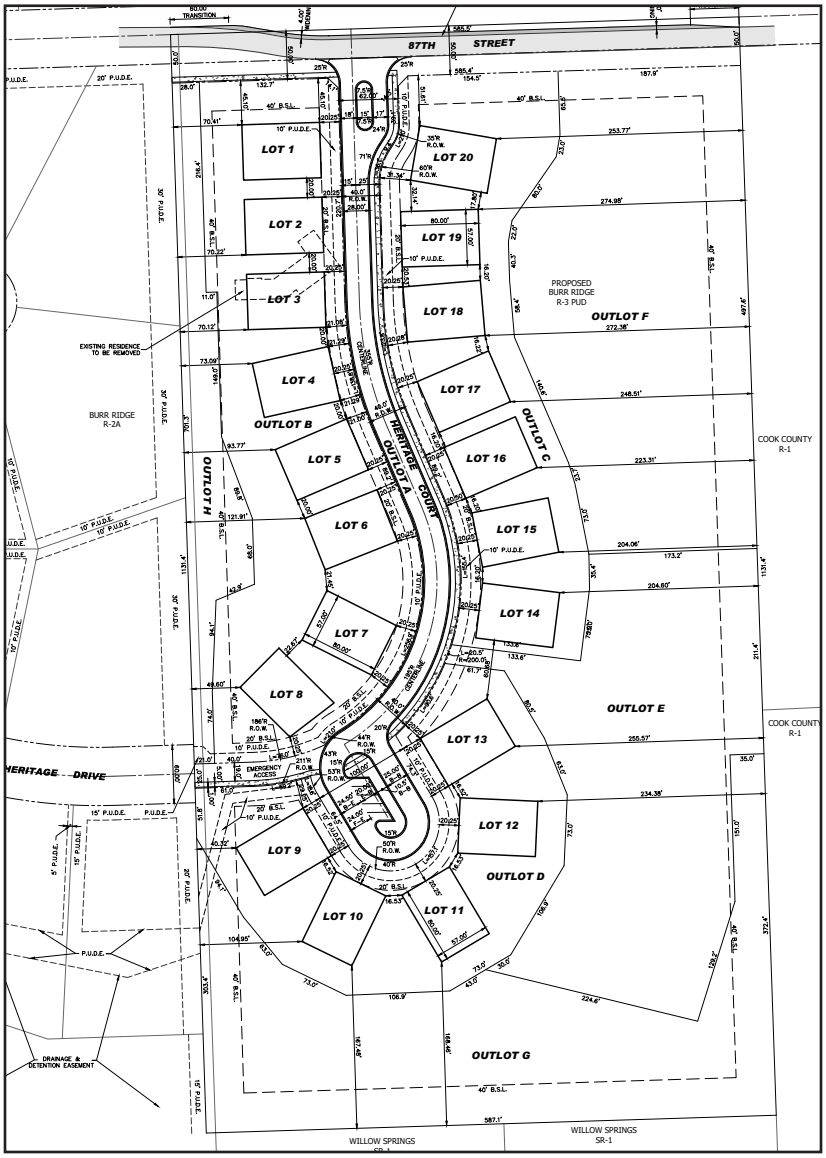

Site Plan

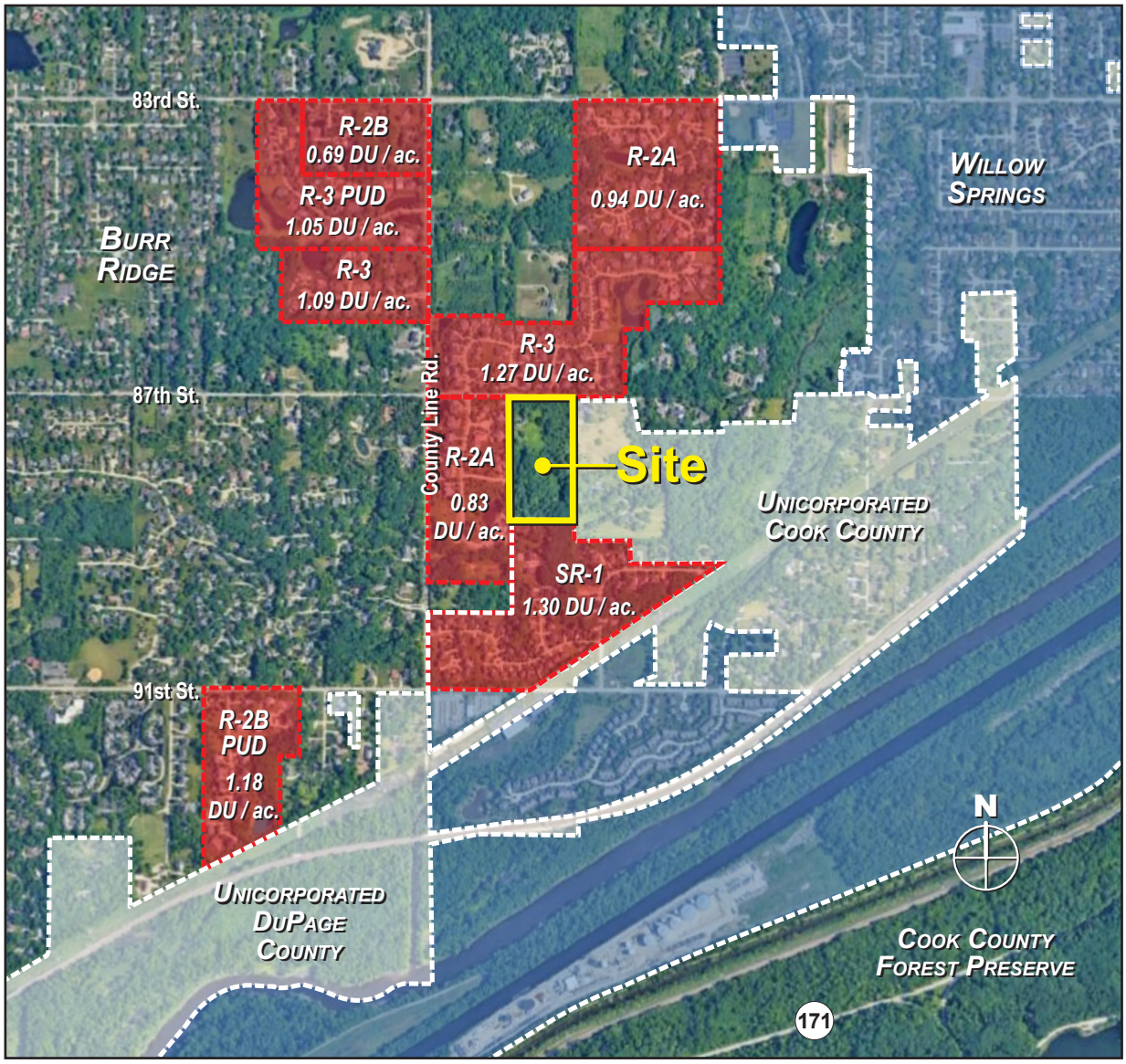

Land Use Context

VI. Land Use Context

The subject property is bounded by east by unincorporated Cook County, and on the south by the Village of Willow Springs. Land use in the surrounding area is exclusively residential, with gross densities ranging from ±1 to ±1.3 DU/ac. Adjacent to the north of the and west of subject property is the Highland Fields subdivision. The northern portion of the subdivision is developed to 1.27 DU/ac. gross density whereas the portion adjacent to the west is not yet completely built out with an anticipated gross density of 0.83 DU/ac. Legacy large lot estate residential is adjacent to the east of the subject property in unincorporated Cook County with the Reserve of Willow Ridge subdivision (Willow Springs) developed to 1.3 DU/ac. gross density adjacent to the south.

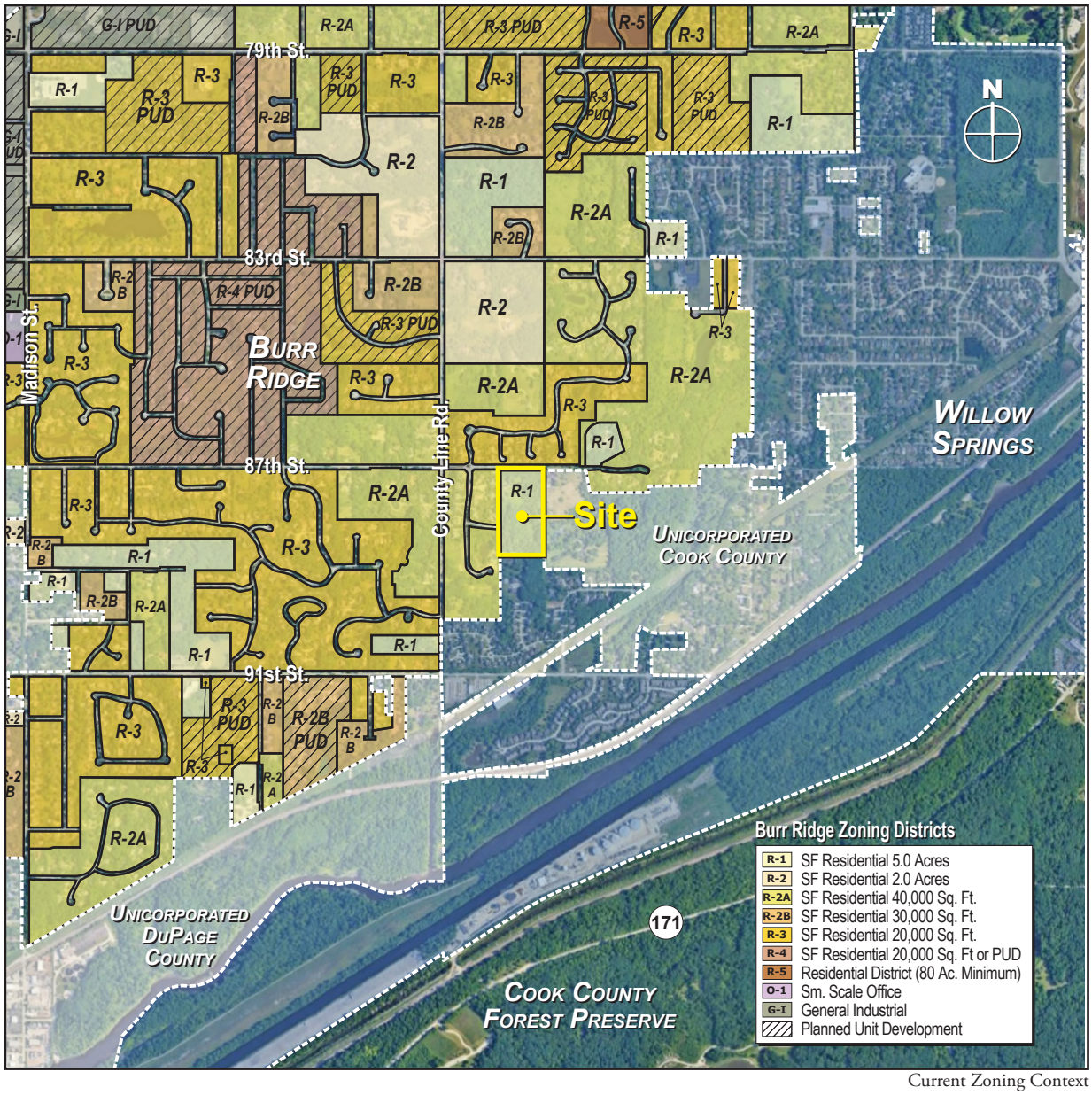

Current Zoning Context

VII. Zoning Context

The subject property is currently zoned R-1. In this case the R-1 classification is a provisional zoning and reflects development density of the current improvement of the property upon annexation which occurred in 2005. The surrounding zoning pattern is exclusively residential with a mix of Burr Ridge R-3 and R-2A allowing minimum lot areas of 40,000 to 20,000 square feet (±1.0 to ± 2.1 DU/ac. gross density. It should be noted that both Burr Ridge zoning classifications require a minimum of 40 acres to qualify for a Planned Unit Development, however numerous PUDs in the area have been approved with smaller parcel sizes.

VII. Planning Context

The Village of Burr Ridge Comprehensive Plan was drafted in 1999 (with minor updates through 2007) and can be considered out of date, especially with respect to current housing development trends. The proposed site is located within the German Church Road subarea, bordered by German Church Road to the north and County Line Road to the east. At the time of the adoption of the Comprehensive Plan, this area had not yet been annexed into Burr Ridge, but continued residential development of this area is identified as a common goal between the Villages of Willow Springs and Burr Ridge (Comprehensive Plan p. 19). The Comprehensive Plan specifies that:

> *"New development within this subarea should take on a specific residential character that is consistent with the lot sizes of surrounding developments such as Arrowhead Farm" (Comprehensive Plan p. 19)*

The plan goes on to state:

> *"The preferred approach in the German Church Road subarea is a mix of lot sizes, averaging 30,000 square feet in size, organized in a typical subdivision format. Larger lot subdivisions will also be encouraged. This site planning approach is reflected by the currently proposed Highland Fields development." (Comprehensive Plan p. 19)*

The two referenced subdivisions are developed at ±1.0 DU/ac. gross densities. The largest subdivision constructed after the 1999 Comprehensive Plan is the subdivision immediately north of the subject property, developed to a 1.27 DU/ac. gross density, which is substantially similar the proposed gross density on the subject property.

Burr Ridge's Comprehensive Plan also stresses the importance of new developments taking into consideration pre-existing natural resources, such as woodlands and open spaces, and topographical and floodplain.

> *"Future residential developments should maintain, preserve, and create additional wooded areas and other natural features, giving special consideration of topographical and floodplain conditions." (Comprehensive Plan p. 18)*

The plan recommends that development that considers existing topographical and natural re-sources into its designs be allowed a transfer of density to protect existing natural resources:

Innovative design for residential site development that is sensitive to existing topography and natural features should be encouraged. In certain instances, the Village will consider allowing a transfer of density to achieve such development" (Comprehensive Plan p. 18)

"It is also desirable that new residential subdivisions take advantage of the unique characteristics of the terrain. This suggests a need for a variety of lot sizes and the use of transfer of density within a traditional subdivision to preserve open space" (Comprehensive Plan p. VII & p. 28)

Given the site plan of the proposed development, and the preserved natural areas along with the generally compatible gross density, the proposed development is consistent with the official Comprehensive Plan of the Village of Burr Ridge.

VIII. Evaluation of Proposed Zoning Map Amendment

Analysis:

The applicant proposes a Zoning Map Amendment to change the existing provisional R-1 zoning on the subject property to R-2B PUD to allow a clustered Planned Unit Development on a 15.23 acre site. The Village of Burr Ridge Zoning Ordinance requires findings of fact by the Village of Burr Ridge Plan Commission regarding the criteria listed in §XIII-10-3(1–5). Below is an analysis of the factors for approval of Zoning Map Amendments with the proposed findings of fact listed below each criteria.

1. Existing uses of property within the general area of the property in question.

Land use in the surrounding area is exclusively residential, with gross densities ranging from ±1 to ±1.3 DU/ac. Adjacent to the north of the and west of subject property is the Highland Fields subdivision. The northern portion of the subdivision is developed to 1.27 DU/ac. gross density whereas the portion adjacent to the west is not yet completely built out with an anticipated gross density of 0.83 DU/ac. Legacy large lot estate residential is adjacent to the east of the subject property in unincorporated Cook County with the Reserve of Willow Ridge subdivision (Willow Springs) developed to 1.3 DU/ac. gross density adjacent to the south. The proposed Zoning Map Amendment would allow a land use that is consistent with adjacent uses to the north west and south and compatible with future development of under utilized land in unincorporated Cook County to the east..

2. The zoning classifications of the property within the general area of the property in question.

The property is contiguous to the Highland Fields development on two sides. Highland Fields to the north is zoned R3 and R-2A to the west. The property to the south is incorporated and zoned SR2 Suburban Residential-Single Family within the village of Willow Springs. The property to the east is within unincorporated Cook County and is zoned Single Family Residence R1. The proposed change in zoning from a provisional R-1 zoning classification to R-2B is consistent with the zoning pattern in the general area of the subject property.

3. The suitability of the property in question to the uses permitted under the existing zoning classification.

The existing zoning classification of R1 which requires single family parcels of five acres is obsolete. A R1 five-acre lot subdivision would be impractical in light of current day land valuation, the availability and the costs to extend public utilities and current market trends in homeownership. In addition, the R-1 classification is the most restrictive classification in the Burr Ridge Zoning Ordinance. It is common practice to zone annexed parcels without a development plan to the R-1 classification as it ensures that a proposal for development in the future would require a change in zoning and would need to seek the necessary approvals.

4. The trend of development, if any, in the general area of the property in question, including changes, if any, which have taken place in its present zoning classification.

The trend of development in the general area is for the annexation and development of under utilized land as single family residential product. Gross densities vary between ±1.0 to ±1.3 DU/ac. The nearby developments within general areas are developed subdivisions with full suburban improvements including such items as sewer, water, and subdivision streets improved with curb and gutter. The less intense zoning districts, such as R-2 & R-2A, within the general area are typically former county developments that later annexed to the village in order to connect to public utilities and mid-sized parcels generally along County Line Road and west along 87th Street. The proposed change in zoning would allow a development that was consistent with the trend of development in the general area.

5. The impact upon the objectives of the Official Comprehensive Plan of the Village of Burr Ridge, as amended.

If amended, the proposed R-2B PUD zoning district, with an age-targeted cluster product, would result in an overall high quality suburban development with substantial preserved natural areas and a low density that will enhance the surrounding neighborhoods and be within the character of the overall community. All of these attributes are consistent with the objectives of the Official Comprehensive Plan of the Village of Burr Ridge.

Conclusions:

Given the foregoing analysis, he rezoning from R1 to R-2B PUD is appropriate for the site and location, and consistent with the required findings of fact for zoning map amendments in the Village of Burr Ridge zoning ordinance.

IX. Evaluation of Proposed Variation

Analysis:

The applicant requests a variation from §VI-E-3-b of the Burr Ridge Zoning Ordinance which requires a minimum of 40 acres and 800 feet in lot width for a Planned Unit Development. A variation from the minimum lot area and width standards is listed as an authorized variation under §XII-8-4-4 of the Burr Ridge Zoning Ordinance. The Village of Burr Ridge Zoning Board of Appeals is required to make findings of fact with regard to the standards contained in §XII-8-3(1–8) of the Village of Burr Ridge Zoning Ordinance. Below is an analysis of the factors for approval of Variances with the proposed findings of fact listed below each criteria.

1. Because of the particular physical surroundings, shape, or topographical conditions of the specific property involved, a particular hardship to the owner would result, as distinguished from a mere inconvenience, if the strict letter of the regulations were to be carried out

The request for a variation from the minimum area requirement for A PUD is due to the fact that the subject property is only 15.22 acres where the minimum area requirement for the R-2B Zoning District is 40 acres. Due to the presence of significant tree cover on the site, and its sloping nature, much of the land to the south and east on the site is difficult and costly to clear, fill and develop. In order to preserve these natural areas and efficiently develop the property, a cluster development is necessary, concentrating developable area to the west and north on the property. The only manner in which a cluster development may be approved is via a PUD. Given the fore-

going, the site size, topography and wooded nature constitute a legitimate hardship to the owner, prohibiting conventional development that could be approved and financed under R-2B zoning if the strict letter of the regulations were to be carried out.

2. The property in question cannot yield a reasonable return if permitted to be used only under the conditions allowed by the regulations governing the zoning district in which it is located.

Given the sloping nature of the site and the presence of significant tree stands the cost of clearance and site preparation to accommodate a conventional R-2B development scheme and the less efficient layout resulting in only 12 developable lots makes conventional development financially unfeasible.

3. The conditions upon which an application for a variation is based are unique to the property for which the variance is sought, and are not applicable, generally, to other property within the same zoning classification.

The site's topography and vegetation are rare and unique to the subject property and cause a legitimate practical difficulty generally not applicable to other property within the same zoning classification.

4.The purpose of the variation is not based primarily upon a desire to increase financial gain.

The purpose of the variation is to allow a site development scheme that preserves existing natural areas and vegetation on the subject property while improving the developable areas of the site with a financially feasible, lower-maintenance housing product attractive to a growing target market of empty nesters wishing to continue to live in Burr Ridge. The development plan does not seek additional density nor floor area beyond that consistent with the R-2B Zoning District. The gross densities proposed allow for a minimum of 33,168 square feet of lot area per dwelling unit which is consistent with the minimum of 30,000 square feet of lot area per dwelling unit in the R-2B zoning District. The development scheme seeks only to take advantage of the site planning flexibility afforded by Planned Unit Developments to execute a clustered development scheme that preserves significant woodland areas and natural drainage patterns and topography.

5. The alleged difficulty or hardship is caused by this Ordinance and has not been created by any persons presently having an interest in the property.

The site slope, size, and vegetation, which is the cause of the practical difficulty or hardship was not created by the applicant or any person having an interest in the property.

6. The granting of the variation will not be detrimental to the public welfare or injurious to other property or improvements in the neighborhood in which the property is located.

The granting of the proposed variation to allow a PUD on a site less than 40 acres will not be detrimental to the public welfare or injurious to other nearby property or improvements. The proposed variation will allow a well-designed cluster development that preserves significant site vegetation and natural character and provides storm management facilities which exceed minimum standards by ±11.5% providing downstream benefits.

According to a traffic study prepared by KLOA, no significant negative impacts on the surrounding road network are anticipated and according to an analysis prepared by Argianas & Associates, no negative impact on nearby conventional single-family detached residential development is anticipated by the construction of a cluster development. Given the foregoing, the granting of the variance will not be detrimental to the public welfare or injurious to other property or improvements in the neighborhood in which the property is located.

6. The granting of the variation will not alter the essential character of the neighborhood or locality.

The subject property is located in an area dominated by low to moderate density detached single-family residential development zoned either R-2A/B or R-3 with gross densities ranging from ±1.0 to ±1.3 dwelling units per acre. The anticipated density of the proposed development is consistent with those densities at 1.31 DU/ac. The gross density similar to the adjacent development to the north and south of the subject property. The clustered development scheme preserves significant areas of natural open space consistent with the character of surrounding developed and undeveloped land. In this case a conventional development which would essentially require clear-cutting the site and would not be in character with the surrounding neighborhood or locality. Given the foregoing, granting the variation to allow a clustered PUD on the subject property will not alter the essential character of the neighborhood or locality.

7. The proposed variation will not impair an adequate supply of light and air to adjacent property or substantially increase the congestion of the public streets, or increase the danger of fire, or impair natural drainage or create drainage problems on adjacent properties, or endanger the public safety, or substantially diminish or impair property values within the neighborhood.

The proposed variation will allow a well-designed clustered development that minimizes impact on natural areas and is well separated from existing development. Setbacks within the development allow adequate light and air while preserving views to natural wooded areas of the site. Density is consistent with surrounding development and according to a traffic study prepared by KLOA, no substantial impact on the surrounding street system is anticipated. Site engineering is designed to preserve natural topography and drainage patterns and storm management facilities on-site are designed to exceed standards by ±11.5 %. As mentioned earlier, an analysis performed by Argianas & Associates indicates no negative impact on property values due to proximity to clustered developments. Given the foregoing, the proposed variation will not impair an adequate supply of light and air to adjacent property or substantially increase the congestion of the public streets, or increase the danger of fire, or impair natural drainage or create drainage problems on adjacent properties, or endanger the public safety, or substantially diminish or impair property values within the neighborhood.

8. The proposed variation is consistent with the official Comprehensive Plan of the Village of Burr Ridge and other development codes of the Village.

The Village of Burr Ridge Comprehensive Plan was drafted in 1999 and is considered out of date with respect to current housing

and development trends. That said, with regard to the plan, the proposed site is located within the German Church Road subarea, bordered by German Church Rd to the north and County Line Rd to the east. At the time the Comprehensive Plan was adopted this area had not yet been annexed by Burr Ridge, but the continued residential development of this area is identified as a common goal between the Villages of Willow Springs and Burr Ridge (Comprehensive Plan p. 19). The Comprehensive Plan specifies that:

"New development within this subarea should take on a specific residential character that is consistent with the lot sizes of surrounding developments such as Arrowhead Farm" (Comprehensive Plan p. 19)

The plan goes in to state:

"The preferred approach in the German Church Road subarea is a mix of lot sizes, averaging 30,000 square feet in size, organized in a typical subdivision format. Larger lot subdivisions will also be encouraged. This site planning approach is reflected by the currently proposed Highland Fields development." (Comprehensive Plan p. 19)

The two referenced subdivisions are developed at ±1.0 DU/ac. gross densities. The largest subdivision constructed subsequent to the 1999 Comp Plan is the subdivision immediately north of the subject property developed to a 1.27 DU/ac. Gross density which is substantially similar the proposed gross density on the subject property.

Burr Ridge's Comprehensive Plan also stresses the importance of new developments taking the pre-existing natural resources, such as woodlands and open spaces, and topographical and floodplain conditions into consideration (Comprehensive Plan p. 18).

"Future residential developments should maintain, preserve, and create additional wooded areas and other natural features, giving special consideration of topographical and floodplain conditions."

The plan recommends that developments that consider existing topographical and natural resources in their designs be allowed a transfer of density in order to protect the existing natural resources:

"Innovative design for residential site development that is sensitive to existing topography and natural features should be encouraged. In certain instances, the Village will consider allowing a transfer of density to achieve such development" (Comprehensive Plan p. 18)

"It is also desirable that new residential subdivisions take advantage of the unique characteristics of the terrain. This suggests a need for a variety of lot sizes and the use of transfer of density within a traditional subdivision to preserve open space" (Comprehensive Plan p. VII & p. 28)

Given the site plan of the proposed development and the preserved natural areas along with the generally compatible gross density, the granting of the variation to allow a PUD on the subject property is consistent with the official Comprehensive Plan of the Village of Burr Ridge and other development codes of the Village.

Conclusions:

Given the legitimate practical difficulty and particular hardship caused by the natural site conditions a variation to the minimum site area and lot width standards is justified according to the standards for variations contained in the Village of Burr Ridge zoning ordinance.

X. Evaluation of Proposed Planned Unit Development

Analysis:

Section XII.L.7 of the Village of Burr Ridge Zoning Ordinance requires the following findings for a request for a Planned Unit Development (PUD). The petitioner must respond to and confirm each one of these findings by indicating the facts supporting such findings. These findings of fact evaluate in what respects the proposal would or would not be in the public interest.

1. In what respects the proposed plan is or is not consistent with the stated purpose of the planned unit development regulations.

The proposed plan provides 20 units of clustered housing with a target market consisting of more mature individuals and couples seeking a more maintenance free living arrangement. The clustered development minimizes the burden of landscape maintenance with larger areas of open space in common ownership maintained by a Homeowner's Association rather than by individuals on larger lots. This housing type is attractive to empty nesters and professionals looking to downsize and remain in the community and provides a housing option not currently available in large numbers in Burr Ridge. The provision of this housing type and the proposed clustered site plan on a heavily wooded parcel that preserves natural areas, site topography and drainage patterns is in the public interest, and would not otherwise be permitted pursuant to the Burr Ridge Zoning Ordinance but for Planned Unit Development approval. Consistent with the stated purposes of Planned Unit Development the proposed plan:

1. Provides a choice in housing type available to the public by allowing development that would not be possible under the strict application of other sections of this Ordinance;

2. Permanently reserves heavily wooded open space;

3. Permits the preservation of green space, natural vegetation, topographic and geological features by employing a clustered development prototype;

4. Employs a creative approach to the use of land and related physical facilities which results in better urban design, and the provision of aesthetic amenities.

5.Allows the efficient use of land, so as to provide an economic benefit by allowing development on a heavily wooded sloping site that would otherwise be difficult to improve, thus increasing the tax base of the Village without significant additional burden on Schools or other Village services.

6.Provides innovation in development so that the growing needs and demands of the population may be met by a greater variety in type, design, and layout of housing, and by conservation and more efficient use of open space ancillary to said buildings and structures, all in a manner so as to be consistent with the character of the zoning district in which the planned unit development is located.

In these respects the proposed plan is consistent with the stated purpose of the planned unit development regulations.

2. The extent to which the proposed plan meets the requirements and standards of the planned unit development regulations.

With respect to the standards for residential planned unit developments regarding mini-

mum lot area and width, the lot area for single-family detached dwellings may not be less than an average of 16,000 square feet with no lot having an area of less than 14,000 square feet, except in a cluster-type lot arrangement, the minimum lot area may be reduced. As the pro-posed development is a clustered development, the minimum lot size is reduced to generally 4,500 square feet. Lot area per dwelling unit for the entire site will be 33,168 square feet.

With respect to Floor Area Ratio for residential planned unit developments, the maximum al-lowed is 0.20. With a net site area of 492,549 square feet (gross -roads and detention), a total of 98,510 square feet or 4,925 square foot per lot is allowed. Seven different models are pro-posed for the subject property. Total floor area for the seven different models range from 2,134 square feet to 3,419 square feet. The maximum F.A.R. on the site would be 0.13 if the largest model were chosen on each of the 20 building lots. Since a mix of models is expected the actual F.A.R. achieved will likely be less than the maximum of 0.13 and less than the maximum 0.20 allowed by ordinance.

With respect to yards in residential planned unit developments, perimeter yards are required according to the underlying zoning District Regulations. For the R-2B District 100' yards are required along the 87th Street and south property lines and 40' interior side yards are required. Current plans accommodate the required 40' side yards and a 100' south property line yard, however relief is requested from the front yard setback with only 25.5 feet provided. Single-family clustered dwellings are required to have 40' font yards, 10'side yards and 30' rear yards. Front yards of ±25'feet are provided with more than 10' separation (combined side yards)between buildings and ample rear yards that exceed the 30' requirement.

With respect to building height in residential planned unit developments, the maximum al-lowed is 30'. Proposed building prototypes do not exceed that 30' limit with maximum heights ranging from 19'-4" to 26'-9".

With respect to the dwelling unit minimum floor areas all units proposed exceed the minimum unit sizes prescribed with all 2 bedroom units exceeding 1,200 s.f., all 3-bedroom units exceeding 1,600s.f., and all 4+ -bedroom units exceeding 1,900 s.f. with an additional 300 s.f. for any additional bedrooms.

Required parking will comply with the standards Section IX with two parking spaces per dwelling unit provided.

Finally, the requirements for Designation of Common Open Space are satisfied with over 34% (5.25 acres) designated and being located more than 20 feet away from buildings and walkways and minimum dimensions far exceeding the 50' minimum.

3. The extent to which the proposed plan departs from the zoning and subdivision regulations otherwise applicable to the subject property, including but not limited to, the density, dimension, area, bulk, and use, required improvements, construction and design standards and the reasons why such departures are or are not deemed to be in the public interest.

With respect to the Zoning Ordinance Standards, the subject property is located in the R-2B District. With respect to allowed uses §VI-E-2(h) authorizes Planned Unit Devel-

opments as a Special Use. Minimum lot standards for Planned Unit Developments are established in §VI-E-3(b) requiring a minimum lot area of 40 acres and minimum lot width of 800 feet. The subject property requires a variation from this standard with a gross lot area of 15.23 acres and lot width of 585.5 feet. This departure from the R-2B minimum lot area and width standards is in the public interest because it is the only means to allow cluster type developments and certain housing types attractive to an aging demographic. As the Village of Burr Ridge approaches near full build out of available land, no parcels greater than 15 acres exist let alone those approaching 40 acres.

§VI-E-4 establishes 0.20 maximum Floor Area Ratio (F.A.R.). For Planned Unit Developments, F.A.R. is calculated gross floor area ÷ net site area. The site plan anticipates a variation in the building prototypes with up to six different plan/elevation configurations and anti-monotony guidelines ensuring a mix of unit sizes and material choices. That said, the maximum F.A.R. for the subject would be is 0.13 if all sites were improved with the largest prototype which complies with this standard.

§VI-E-5 establishes a Maximum Height of 1.5 stories and 30 feet. The proposed building prototypes comply with this standard with a maximum height of 26'-9".

§VI-E-6 establishes a Minimum Ground Floor Area Per Dwelling of 1,200 s.f. for multi-story buildings. With minimum building footprints of ranging from 1,982 square feet to 2,476 square feet the proposed prototypes meet this standard.

§VI-E-7(b) establishes perimeter setbacks for Planned Unit Developments of 100' (front) 40' (side) and 100' (rear). The proposed plan requires relief from the front yard setback along 87th Street with a proposed setback of 40.25 feet.

§VI-E-8 references the parking standards in §XI Off-Street Parking and Off-Street Loading requiring 2 parking spaces per dwelling unit. The proposed prototypes include 2-car garages and thus this standard is met.

Regarding Subdivision Ordinance standards, relief is requested from the following:

Section VII.C.8.a: Cul de sac Street maximum length 500' (±800' proposed), maximum 15 lots (20 lots proposed). Initial plans called for a gated connection to existing Heritage Dr. to the west. After discussions with staff, it was decided a better solution would be to create a Cul de sac and provide emergency and utility access via an 18' access road. This is in the public interest in that it minimizes the potential for thru traffic affecting the adjacent subdivision to the west.

Section VII.D.Table VII-A: local street right-of-way width 60 ft (private street held to the same standard as public), 40' proposed; The more narrow right -of-way provides adequate access for both residents and service/emergency vehicles while allowing the maximum amount of wooded area to the east to be preserved all in the public interest.

Section VII.G.2 minimum lot depth of 130' required, clustered lots as indicated on plans are 80' in depth. As was the case with the reduced in right-of-way, minimizing lot depths allows a greater amount of wooded natural area to be preserved all in support of the public interest.

Section VIII.I.1 sidewalks must be provided on both sides of the street. By providing a sidewalk on only the east side of the proposed street a reduction in right-of-way is possible, which, as mentioned earlier allows the maximum amount of wooded natural areas to be preserved all in the public interest.

4. The extent of public benefit produced, or not produced, by the planned unit development in terms of meeting the planning objectives and standards of the Village. Any specific beneficial actions, plans or programs agreed to in the planned unit development proposal which are clearly beyond the minimum requirements of this Ordinance shall be specifically listed as evidence of justified bulk premiums and/or use exceptions.

The improvement of the subject property with a clustered residential development providing a housing type attractive to Burr Ridge's aging population provides a public benefit by allowing "empty nesters" to remain in the community where they raised their families and continue to shop and patronize local businesses with which they are familiar. Preservation of wooded areas and natural drainage patterns and topography also provides public benefit. The proposed development plan is consistent with gross densities allowed in the R-2B District and no additional Floor Area Ratio is requested thus no bulk premiums are requested ¬. The relief re-quested is to allow a clustered configuration that minimizes impact on natural wooded areas and site topography. That said, the proposed storm management facilities on site are designed to accommodate ±11.5% more capacity than required by ordinance providing public benefit for downstream properties.

5. The physical design of the proposed plan and the manner in which said design does or does not make adequate provision for public services, provide adequate control over vehicular traffic, open space and further the amenities of light and air, recreation and visual enjoyment.

The physical design of the proposed plan provides adequate access via a private road-way and storm management facilities that provide excess capacity. A traffic study authored by KLOA indicates no negative impacts on the adjacent roadway network and minimizes impacts on the adjacent subdivision to the west. The clustered design scheme preserves significant areas of natural woodlands and natural drainage patterns and topography and provides open space that furthers the amenities of light, air recreation and visual enjoyment within the proposed subdivision and for the broader neighborhood.

6. The relationship and compatibility, beneficial or adverse, of the proposed plan to the adjacent properties and neighborhood.

The proposed plan for a residential clustered development is compatible with adjacent residential uses and is well buffered through the preservation natural wooded areas. Preserving woodlands, natural drainage patterns and topography and minimizing impacts on existing natural areas is beneficial to adjacent properties and the neighborhood as well. It maintains an orderly pattern of development consistent with the broader policies of the Burr Ridge Comprehensive Plan and allows an underdeveloped property to be brought to a more efficient use.

7. The desirability of the proposed plan to the Village's physical development, tax base and economic well-being.

The development of the subject property with a residential use consistent with the German Church Road Sub-area of the Villages Comprehensive Plan fulfills the Village's vision for development of its southeastern extremity. Given the target demographic of the housing product, impact on Village/Community services such as schools, police, fire and EMS services are anticipated to be minimal with significant gains from property tax revenues for all taxing bodies indicated in the Applicant's Financial Impact Analysis. The ability to make available housing options desirable to the Villages' aging population allowing them to remain in Burr Ridge also provides economic benefit to the community at large. All of these attributes are desirable to the Village's physical development as well as its tax base and economic well-being.

8. The conformity with the recommendations of the Official Comprehensive Plan as amended, and all other official plans and planning policies of the Village of Burr Ridge.

The Village of Burr Ridge Comprehensive Plan was drafted in 1999 and can be considered out of date with respect to current housing development trends. The proposed site is located within the German Church Road subarea, bordered by German Church Road to the north and County Line Road to the east. At the time of the adoption of the Comprehensive Plan, this area had not yet been annexed into Burr Ridge, but continued residential development of this area is identified as a common goal between the Villages of Willow Springs and Burr Ridge (Comprehensive Plan p. 19). The Comprehensive Plan specifies that:

> *"New development within this subarea should take on a specific residential character that is consistent with the lot sizes of surrounding developments such as Arrowhead Farm" (Comprehensive Plan p. 19)*

The plan goes on to state:

> *"The preferred approach in the German Church Road subarea is a mix of lot sizes, averaging 30,000 square feet in size, organized in a typical subdivision format. Larger lot subdivisions will also be encouraged. This site planning approach is reflected by the currently proposed Highland Fields development." (Comprehensive Plan p. 19)*

The two referenced subdivisions are developed at ±1.0 DU/ac. gross densities. The largest sub-division constructed after the 1999 Comprehensive Plan is the subdivision immediately north of the subject property, developed to a 1.27 DU/ac. gross density, which is substantially similar the proposed gross density on the subject property.

Burr Ridge's Comprehensive Plan also stresses the importance of new developments taking into consideration pre-existing natural resources, such as woodlands and open spaces, and topographical and floodplain.

> *"Future residential developments should maintain, preserve, and create additional wooded areas and other natural features, giving special consideration of topographical and floodplain conditions." (Comprehensive Plan p. 18)*

The plan recommends that development that considers existing topographical and natural re-sources into its designs be allowed a transfer of density to protect existing natural resources:

Innovative design for residential site development that is sensitive to existing topography and natural features should be encouraged. In certain instances, the Village will consider allowing a transfer of density to achieve such development" (Comprehensive Plan p. 18)

"It is also desirable that new residential subdivisions take advantage of the unique chaacteris-tics of the terrain. This suggests a need for a variety of lot sizes and the use of transfer of density within a traditional subdivision to preserve open space" (Comprehensive Plan p. VII & p. 28)

Given the site plan of the proposed development, and the preserved natural areas along with the generally compatible gross density, the proposed development is consistent with the official Comprehensive Plan of the Village of Burr Ridge.

9. Conformity with the standards set forth in Section XIII.K.7 of this Ordinance.

XIII.K.7: Special Use Standards
No special use shall be recommended by the Plan Commission or approved by the Village Board unless it is found that:

1. The use meets a public necessity or otherwise provides a service or opportunity that is not otherwise available within the Village and is of benefit to the Village and its residents.
The proposed use is a well-designed cluster development set within an existing natural environment that will preserve existing vegetation in the form of dedicated conservation areas, while adding other community features, including walking paths. Site engineering is de-signed to preserve existing natural topography, and drainage patterns and storm management facilities on-site are designed to exceed standards by ±11.5%, providing additional benefit to the downstream neighbors by controlling presently unrestricted storm water runoff.

The proposed development and its lower-maintenance housing product is designed to appeal to empty nesters wishing to continue living in the area, fulfilling a growing need that is largely un-met in Burr Ridge and surrounding suburbs.

Given the foregoing, the proposed use meets a specific public necessity and will be a benefit to the Village and its residents.

2. The establishment, maintenance, or operation of the special use will not be detrimental to, or endanger the public health, safety, morals, comfort, or general welfare.
The proposed development will minimize the impact on natural areas and is well-separated from existing development. Setbacks within the development allow adequate an adequate supply of light and air, while preserving views to natural wooded areas of the site. Density is consistent with surrounding development and, according to a traffic study prepared by KLOA, no substantial impact on the surrounding street system is anticipated. Site engineering is de-signed to preserve natural topography and drainage patterns and storm management facilities on-site are designed to exceed design standards. The proposed development and its open space areas will be maintained in a consistent manner, which will benefit both property owners within the development itself and in the surrounding neighborhood.

Given the foregoing, the proposed development will not be detrimental to, or endanger the public health, safety, morals, comfort, or general welfare.

3. The special use will not be injurious to the uses and enjoyment of other property in the immediate vicinity for the purposes already permitted, nor substantially diminish or impair property values within the neighborhood in which it is to be located.

The proposed development will result in a well-designed cluster development that will preserve substantial portions of the existing natural environment, unlike more traditional residential development. This preservation will serve to maintain the existing character of the subject property and its surroundings. Other improvements associated with the proposal will provide additional benefits, such as those associated with stormwater management.

An analysis prepared by Argianas & Associates found that no measurable value diminution of conventional single-family detached residential development located within the subject area is anticipated due to the construction of a cluster development such as the proposed development.

Given the foregoing, the proposed development will not be injurious to the uses and enjoyment of other property in the vicinity, nor will it diminish or impair property values within the neighborhood in which it is located.

4. The establishment of the special use will not impede the normal and orderly development and improvement of the surrounding property for uses permitted in the district.

The subject property is in an area dominated by low- to moderate-density, detached single-family residential development zoned either R-2A/B or R3 with gross densities ranging from ±1.0 to ±1.3 dwelling units per acre. The anticipated density of the proposed development is consistent with those densities at 1.31 dwelling units per acre. The gross density is substantially similar to the adjacent development to the north and south of the subject property.

The clustered development scheme preserves significant areas of natural open space consistent with the character of surrounding developed and un-developed land. In this case, a convention-al development would require clear-cutting the site, and would not be in character with the surrounding neighborhood or locality.

Given the foregoing, the proposed development will not impede the normal and orderly development of surrounding property but will in fact be complimentary to existing and future uses.

5. Adequate utilities, access roads, drainage and/or necessary facilities have been or will be provided.

Adequate utilities to serve the subject property are in place, and all necessary utility work on the subject property itself will be designed to meet all required standards. An access road connecting the proposed development to 87th Street will be provided and as described in more detail in response to the following standard, is designed to adequately accommodate the proposal and minimize congestion. Drainage patterns and storm management facilities on-site are designed to exceed standards by ±11.5%, providing additional

benefit to the downstream neighbors by controlling presently unrestricted storm water runoff. Therefore, adequate utili-ties, access roads, and drainage will be provided to support the proposed development.

6. Adequate measures have been or will be taken to provide ingress and egress so designed as to minimize traffic congestion in the public streets.

Access to the proposed use is provided by a single internal roadway, Heritage Drive, which will connect the development to 87th Street. Heritage Drive terminates in a cul-de-sac and, as such, vehicles accessing the development will not pass through existing neighborhoods at the periphery of the site.

A traffic study prepared by KLOA concluded that the development is well-located with respect to the area roadway system, that traffic generated by the proposal can be accommodated by existing area roadways and will not have a significant impact on adjacent intersections, and that the proposed access roadway is projected to operate at a good level of service and will be adequate to efficiently accommodate the proposal.

Given the foregoing, adequate measures have been taking to minimize traffic congestion in the public streets.

7. The proposed special use is not contrary to the objectives of the Official Comprehensive Plan of the Village of Burr Ridge as amended.

The Village of Burr Ridge Comprehensive Plan was drafted in 1999 and can be considered out of date with respect to current housing development trends. The proposed site is located within the German Church Road subarea, bordered by German Church Road to the north and County Line Road to the east. At the time of the adoption of the Comprehensive Plan, this area had not yet been annexed into Burr Ridge, but continued residential development of this area is identified as a common goal between the Villages of Willow Springs and Burr Ridge (Comprehensive Plan p. 19). The Comprehensive Plan specifies that:

> *"New development within this subarea should take on a specific residential character that is consistent with the lot sizes of surrounding developments such as Arrowhead Farm" (Coprehensive Plan p. 19)*

The plan goes on to state:

> *"The preferred approach in the German Church Road subarea is a mix of lot sizes, averaging 30,000 square feet in size, organized in a typical subdivision format. Larger lot subdivisions will also be encouraged. This site planning approach is reflected by the currently proposed Highland Fields development." (Comprehensive Plan p. 19)*

The two referenced subdivisions are developed at ±1.0 DU/ac. gross densities. The largest sub-division constructed after the 1999 Comprehensive Plan is the subdivision immediately north of the subject property, developed to a 1.27 DU/ac. gross density, which is substantially similar the proposed gross density on the subject property.

Burr Ridge's Comprehensive Plan also stresses the importance of new developments taking into consideration pre-existing natural resources, such as woodlands and open spaces, and topographical and floodplain.

> *"Future residential developments should main-*

tain, preserve, and create additional wooded areas and other natural features, giving special consideration of topographical and floodplain conditions." (Comprehensive Plan p. 18)

The plan recommends that development that considers existing topographical and natural re-sources into its designs be allowed a transfer of density to protect existing natural resources:

Innovative design for residential site development that is sensitive to existing topography and natural features should be encouraged. In certain instances, the Village will consider allowing a transfer of density to achieve such development" (Comprehensive Plan p. 18)

"It is also desirable that new residential subdivisions take advantage of the unique characteristics of the terrain. This suggests a need for a variety of lot sizes and the use of transfer of density within a traditional subdivision to preserve open space" (Comprehensive Plan p. VII & p. 28)

Given the site plan of the proposed development, and the preserved natural areas along with the generally compatible gross density, the proposed development is not contrary to the official Comprehensive Plan of the Village of Burr Ridge, but is, in fact, highly consistent with it.

8. The special use shall, in all other respects, conform to the applicable regulations of the district in which it is located, except as such regulations may, in each instance, be modified pursuant to the recommendations of the Plan Commission or, if applicable, the Zoning Board of Appeals.

Apart from the requested variation and planned development deviations associated with the application for the proposed development, the proposed development will conform to all other applicable standards of the district in which it is located. Additional details on the variation and deviations are provided in the relevant sections of this submittal.

Conclusions:

Given the foregoing, the proposed development, which retains significant amounts of natural areas, and provides additional benefits in enhanced storm management, and direct and indirect economic benefits, with little burden on Village services is consistent with the requisite findings of fact for Planned Unit Developments and Special Uses contained in the Village of Burr Ridge zoning ordinance.

VILLAGE OF
BURR RIDGE
7660 COUNTY LINE ROAD
BURR RIDGE IL 60527

MAYOR
GARY GRASSO

VILLAGE CLERK
SUE SCHAUS

VILLAGE ADMINISTRATOR
EVAN WALTER

LEGAL NOTICE OF PUBLIC HEARING

NOTICE IS HEREBY GIVEN that the Plan Commission and Zoning Board of Appeals of the Village of Burr Ridge, Cook and DuPage Counties, Illinois, will conduct the following Public Hearing beginning at 7:00 p.m. on **Monday, December 5, 2022,** at **Village Hall, 7660 County Line Road, Burr Ridge, Illinois, 60527.**

PURPOSE OF HEARING

The Plan Commission/Zoning Board of Appeals will hold a public hearing to consider a request by McNaughton Development LLC to rezone the following property as per section VI.E of the Zoning Ordinance from the R-1 Single-Family Residence District to the R-2B Single-Family Residence District; variations for a Planned Unit Development (PUD) on a parcel measuring 15 acres with 585.5 ft. of lot width instead of the 40 acres and 800 ft. of lot width required as per section VI.E.3.b of the Zoning Ordinance or a text amendment to section VI.E.3.b of the Zoning Ordinance to permit a PUD on parcels of land measuring 15 acres in lot area and 500 ft. of lot width; a special use for a PUD as per section VI.E.2 of the Zoning Ordinance; and Preliminary Plan approval of the PUD as per section XIII.L.2.c. The petitioner seeks to develop the site for a 20-lot single-family residential subdivision. The petition number and address of this petition is Z-25-2022/V-04-2022: 11731 87th Street and the Permanent Real Estate Index Number is 23-06-100-005-0000.

Public comment may be provided by individuals who physically attend the meeting at 7660 County Line Road, Burr Ridge, Illinois, 60527. All written public comment wishing to appear in the Plan Commission report shall be provided no later than Tuesday, November 29, 2022. All public comment may be emailed to Community Development Director Janine Farrell (jfarrell@burr-ridge.gov) or mailed to Ms. Farrell's attention at the address above. The Plan Commission/Zoning Board of Appeals reserves the right to continue said hearings from time to time as may be required without further notice, except as may be required by the Illinois Open Meetings Act.

BY ORDER OF THE PLAN COMMISSION/ZONING BOARD OF APPEALS OF THE VILLAGE OF BURR RIDGE, COOK AND DUPAGE COUNTIES, ILLINOIS.

Greg Trzupek, Chairman

MEMBERS: GREG TRUZPEK, MIKE STRATIS, JIM BROLINE, BARRY IRWIN, JOSEPH PETRICH, ENZA PARRELLA, RICHARD MORTON, AND DEANNA MCCOLLIAN.


CREST CT
CASTLE CT
CROWN CT
87TH ST
JOHNSTON RD
STARK DR
HERITAGE DR
S COUNTY LINE RD
ORCHARD ST
RESERVE DR
WILLOW RIDGE DR
Santa Fe Park

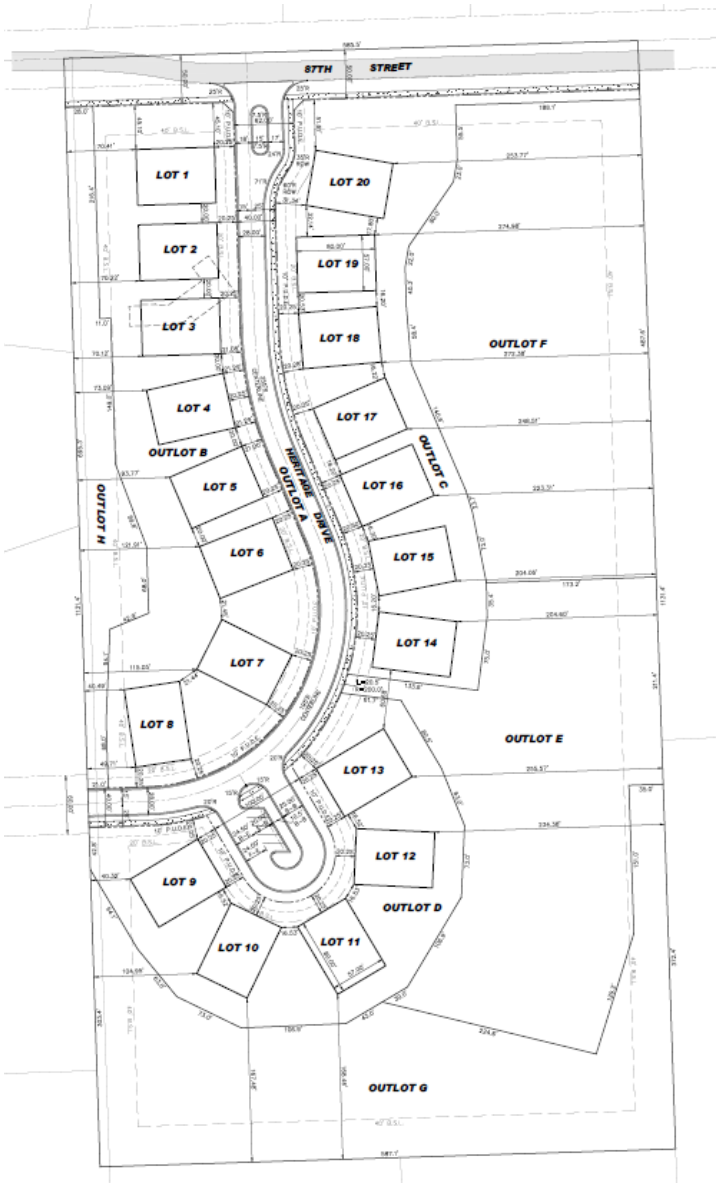
87TH STREET
LOT 1
LOT 2
LOT 3
LOT 4
LOT 5
LOT 6
LOT 7
LOT 8
LOT 9
LOT 10
LOT 11
LOT 12
LOT 13
LOT 14
LOT 15
LOT 16
LOT 17
LOT 18
LOT 19
LOT 20
OUTLOT A
OUTLOT B
OUTLOT C
OUTLOT D
OUTLOT E
OUTLOT F
OUTLOT G
OUTLOT H
HERITAGE DRIVE

William Mologousis
8585 Johnston Rd.
Burr Ridge, IL 60527

A Hadeed & M Abboud
206 Ambriance Dr
Burr Ridge, IL 60527

Ahmed Hassan
8680 Johnston Rd
Burr Ridge, IL 60527

Aman Ali
8638 Johnston Road
Burr Ridge, IL 60527

Amarik & Shveta Singh
8650 Castle Court
Burr Ridge, IL 60527

Amer Natl Tr 123662 09
11622 W 87Th St
Burr Ridge, IL 60527

Anil K Ranginani
8620 Johnston Rd
Burr Ridge, IL 60527

Bharti K Patel
3531 Vanilla Grass Dr
Naperville, IL 60564

Callahan, Jeffery
1838 Davis Ave
Whiting, IN 46394

CARLO ENTERPRISE
P O BOX 607
Hinsdale, IL 60522

CHICAGO TITLE LAND TRU
140 CARRIAGE DR #129C
Burr Ridge, IL 60527

Chicago Trust Company
8800 S County Line Rd
Burr Ridge, IL 60527

Christopher Pelzek
8673 Johnston Rd
Burr Ridge, IL 60527

Ctltc 008002352337
10 S Lasalle St #2750
Chicago, IL 60603

DAVE & MIA CHANNELL
9020 ORCHARD RD
Willow Springs, IL 60480

David & Char Cziperle
8650 Crest Ct
Burr Ridge, IL 60527

DAVID & ERIN MENCONI
11715 ORCHARD RD
Willow Springs, IL 60480

DAVID VANDERSTUYF
8992 Reserve Dr.
Willow Springs, IL 60480

Dilmubarak Sheikh
8644 Johnston Rd
Burr Ridge, IL 60527

DONALD CYNTHIA CIZEK
11748 ORCHARD ST
Willow Springs, IL 60480

Dr Ing Hsu Wu
8687 Johnston Rd
Burr Ridge, IL 60527

EYAAD ODEH & NOOR ALI
9009 Reserve Dr.
Willow Springs, IL 60480

Frank Hojjat
8737 Johnston Rd
Burr Ridge, IL 60527

Frederick W Sauers
11731 W 87Th St
Burr Ridge, IL 60527

G Zeman
8724 Johnston Rd
Burr Ridge, IL 60527

Gena Buonavolanto
8690 Crest Ct
Burr Ridge, IL 60527

GERALD MARCHIONE
9000 ORCHARD ROAD
Willow Springs, IL 60480

Hang Chang Shen
8611 Crown Court
Burr Ridge, IL 60527

Highland Fields
80 Burr Ridge Pky 167
Burr Ridge, IL 60527

Highland Fields HOA
ATTN: Ramak Maheronnaghs
8632 Johnston Road
Burr Ridge, IL 60527

Highland Fields Llc
80 Burr Ridge Pkwy 167
Burr Ridge, IL 60527

Highland Fields Llc
Po Box 308
Maywood, IL 60153

Irfan Alhayani
8610 Crest Ct
Burr Ridge, IL 60527

J & T Baloch
601 Kenmare Dr
Burr Ridge, IL 60527

Jaga Vence
8626 Johnston Rd
Burr Ridge, IL 60527

James G Tuthill
651 Dalewood Ln
Hinsdale, IL 60521

JAY DUTTON
8981 ORCHARD ST
Willow Springs, IL 60480

Jay Houndervoogt
16 W 361 94Th St
Burr Ridge, IL 60527

JEFFREY MALYSZKO & COR
8900 ORCHARD ST
Willow Springs, IL 60480

JOHN & JENNY EBEID
9010 Reserve Dr.
Willow Springs, IL 60480

JOHN J MOSKAL SR
8721 STARK DR
Burr Ridge, IL 60527

John R Wienold
8651 Crest Ct
Burr Ridge, IL 60527

Joseph M Castelbuono
8611 Crest Ct
Burr Ridge, IL 60527

JOSEPH MAHR
1652 WEST BARRY
Chicago, IL 60657

Joseph Parente
8744 Johnson Rd
Burr Ridge, IL 60527

Jurevis, Dolores
8850 County Line Rd
Burr Ridge, IL 60527

Kellie Sipich
8705 Balmoral Ct
Burr Ridge, IL 60527

Kenneth Cohen
730 Mckinley Lane
Hinsdale, IL 60521

LAWRENCE J GALATEO
11758 ORCHARD RD
Willow Springs, IL 60480

LAWRENCE SAJDAK
8973 RESERVE DR
Willow Springs, IL 60480

M & D LUBITZ
8958 ORCHARD RD
Willow Springs, IL 60480

M & E ROSS
8961 ORCHARD RD
Willow Springs, IL 60480

M Elkhadra
8691 Crown Ct
Burr Ridge, IL 60527

M S & R Kholoki
8693 Johnston Rd
Burr Ridge, IL 60527

Marc & Cheryl Pilipuf
8690 Castle Ct
Burr Ridge, IL 60527

Margaret Simak
8415 S County Line Rd
Burr Ridge, IL 60527

Mary Partipilo
8750 S County Line Rd
Burr Ridge, IL 60527

Matthew Petrich
8668 Johnston Rd
Burr Ridge, IL 60527

Michael A Bilder
8609 Crown Court
Burr Ridge, IL 60527

Michael F Glynn
11904 Heritage Dr
Burr Ridge, IL 60527

Michael Thomas
8729 Balmoral Ct
Burr Ridge, IL 60527

Mohamed Hassan
8804 Johnston Rod
Burr Ridge, IL 60527

Mohammad Alkhudari
8610 Crown Court
Burr Ridge, IL 60527

Mubarak Mirjat
8692 Johnston Rd
Burr Ridge, IL 60527

Muhamed & G Kawji
8601 Johnston Rd
Burr Ridge, IL 60527

Noel H Apolinario
8656 Johnston Rd
Burr Ridge, IL 60527

Oak Knoll HOA
ATTN: Brad Bryndal
8501 Oak Knoll Drive
Burr Ridge, IL 60527

Partipilo Family Prtnrshp
8750 S County Line Rd
Burr Ridge, IL 60527

Pawan K Agrawal
421 Stonegate Ct
Willowbrook, IL 60527

Peter Burdi
431 S Dearborn 203
Chicago, IL 60605

Peter Burdi
8651 Castle Ct
Burr Ridge, IL 60605

Raj & Nina Goyal
8686 Johnson Rd
Burr Ridge, IL 60527

Raja Gill
8650 Johnston Road
Burr Ridge, IL 60527

Rajeswaran Venkatraman
8704 Johnson Rd
Burr Ridge, IL 60527

RALPH SOLOMON
8974 RESERVE DRIVE
Willow Springs, IL 60480

Ramak Maheronnaghsh
8632 Johnston Rd
Burr Ridge, IL 60527

Richard Nawracaj
8662 Johnston Rd
Burr Ridge, IL 60527

S Gandhi
8610 Castle Crt
Burr Ridge, IL 60527

S Sastri
7529 Ridgewood Ln
Burr Ridge, IL 60527

Sachin & Deepali Mittal
8614 Johnston Rd
Burr Ridge, IL 60527

SADIE SMITS
8848 STARK DR
Burr Ridge, IL 60527

Salim Hasan
8602 Johnston Rd
Burr Ridge, IL 60527

Saverio Burdi
58 E Walton
Chicago, IL 60611

David & Katherine Schwarz
8670 S County Line Rd
Burr Ridge, IL 60527

Seema Sheth
8691 Crest Ct
Burr Ridge, IL 60527

Seif Martini
9377 S Madison St
Burr Ridge, IL 60527

Shailesh & N Patel
8714 Johnston Dr
Burr Ridge, IL 60527

SHAMA & IMRAN ALI
11735 ORCHARD RD
Willow Springs, IL 60480

Steve Jiotis
8721 Balmoral Court
Burr Ridge, IL 60527

Thomas Carmody
8611 Castle Ct
Burr Ridge, IL 60527

THOMAS LEE
11768 ORCHARD RD
Willow Springs, IL 60480

VLATKO POPOVSKI
8744 JOHNSTON RD
Burr Ridge, IL 60527

Walter Bauldrick
8691 Castle Ct
Burr Ridge, IL 60527

Western Natl Bk 6603
8505 S County Line Rd
Burr Ridge, IL 60527

WILLIAM BETTIGA
8800 STARK DR
Burr Ridge, IL 60527

William Mcintyre
1516 Ponce De Leon Dr
FT Lauderdale, FL 33316

EXHIBIT B

From: Michael Bilder
To: Janine Farrell
Subject: Comments Regarding the Proposed Rezoning for a New 20 Home Subdivision in Highland Fields
Date: Wednesday, November 30, 2022 1:11:26 PM

Dear Ms. Farrell,

I am not sure we can make the Dec 5th Planning Commission meeting so I wanted to get our comments on the official record.

My wife, Carol and I live at 8609 Crown Court in the Highland Fields subdivision. We've been residents for 17 years. I have several concerns about this new planned 20 unit subdivision. First is the traffic. There's only one entrance/exit to our subdivision at 87th St. It already gets an inordinate amount of traffic from residents, landscapers, deliveries and various service companies. Out of necessity, a new subdivision should require a newly created access street with a new entrance/exit connecting the South end of the subdivision to County line Road. (i.e. a new 88th or 89th street entrance/exit).

Secondly, 20 small lot homesites will definitely impact the value of our property by diminishing the prestige of Highland Fields.

We would not be opposed to a modified site plan with fewer homes on much larger lots and a new South access road allowing for a new entrance/exit at County Line Road.

Sincerely,

Michael and Carol Bilder

From:	Matt B
To:	Janine Farrell
Subject:	Message for Planning Commission and Board
Date:	Wednesday, November 30, 2022 2:24:55 PM

Dear Planning Commission and Board Members,

I oppose the building project at:
11731 87th St
Burr Ridge, IL 60527

I cannot attend the meeting regarding the project in person, so I am providing my written comments here.

I drive past this property daily and live just slightly to the east of the property in the same neighborhood. The housing development will lower my property value because it will create additional traffic and overcrowd the otherwise secluded neighborhood.

I ask you to vote no on this proposition.

Sincerely,
Matthew Bogdan
Homeowner of
8555 Oak Knoll Drive
Burr Ridge, IL 60527

From:	Mike Hurtuk
To:	Janine Farrell
Subject:	Petition # Z-25-2022/V-04-2022, "The Enclave of Highland Fields"
Date:	Sunday, November 27, 2022 6:37:23 PM

Dear Development Director, Janine Farrell,

This email is regarding petition # Z-25-2022/V-04-2022, aka "The Enclave of Highland Fields" the current address is 11731 87th Street

I'm writing this email on behalf of myself and my family located at 8691 Crest Court, Burr Ridge, IL in regards to the new proposed subdivision "The Enclave of Highland Fields" proposed by McNaughton Development.

I believe many of the residents in the subdivision have received a correspondence from McNaughton Development requesting support to be emailed to you and Mayor Grasso for this new subdivision, with promises of gift cards and other gifts in return, which I find relatively, odd and amusing at the same time. Contrary to what the developers desire, I'm writing in opposition to this development.

In their correspondence, they include a thumb drive with plans for the subdivision, proposed models, a property value analysis as well as a traffic analysis. I'll briefly touch base on why I do not support this new subdivision in regards to their plans and the bigger picture of what is going on in the community.

I recently moved to Highland Fields, a little over two years ago. We moved from Homer Glen to Burr Ridge. We did an exhaustive home search and found our current home which satisfied nearly all of our desires in terms of home size, space, privacy, school district, as well as what the Burr Ridge community has to offer to our family. This experience as a recent home buyer, as well as the fact that my home would overlook the proposed subdivision puts me in a unique perspective to comment on my concerns of this subdivision. My home is right next to the proposed subdivision, and would face the entrance.

First off, the size of the homes are not even close to the size of the homes in Highland Fields. The homes are the size of townhomes, but are separated by 16 feet at some places. While I understand the developers did an analysis of whether or not this new subdivision would impact home prices in Highland iFelds, there is no way my house would retain its value overlooking this subdivision. In their analysis they provided, they never did an analysis of the home prices in Highland Fields, nor, did they comment on what the proposed subdivision would do to the home prices of lots abutting 87th street, as my home is.

Secondly, I personally, would not have purchased my home if this subdivision was there, or there were plans for this subdivision to be erected in the future. The proposed homes seem like they are 'cookie cutter' type homes my wife and I passed on during our exhaustive search in neighboring towns like Lemont or Orland Park, in favor of more unique, higher quality homes with yards as Burr Ridge is known for. Bringing this subdivision into Highland Fields, no matter how the developers try to hide it in the subdivision takes away some of the prestige as well as aura Highland Fields and Burr

Ridge have.

Lastly, the main entrance of the proposed subdivision on 87th street faces my backyard, my deck, and my garage, my master washroom window and my oldest son's room. I do not have a huge back yard, but do enjoy some privacy. With this new subdivision, cars coming of the subdivision will have a direct view of my deck, my oldest son's room, master bathroom window, and my garage. At night, there will be headlights shining on my deck, windows, pool and hot tub as people exit. With the proposal of 20 home sites in 15 acres, that is a significant amount of traffic to be lighting up my backyard and home, as well as a significant number of people looking at my family and I relaxing in our backyard, or watching me work in my garage.

I am not naïve for the desire to build additional homes in this 15 acre plot and the tax revenue and population it may bring to the community. This proposed subdivision does not fit the current subdivision and what the community of Burr Ridge is known for. I would much rather see much fewer homes in the proposed site, that are of comparable lot size and home size of the current Highland Field homes, or a green area the community can enjoy. We routinely see wildlife such as Eastern screech owls, deer, and even bald eagles at time fly out of that area, which contributes to our love of this area. While I know it's a stretch, I've told my kids many times, if I had the money, I would buy that lot across the street, leave many of the trees there, and build a playground and field area for the local kids to enjoy, instead of driving my kids to a neighboring park to play baseball.

I do trust that whatever decision is made you will keep the current community in mind when making it.

Thank you for your time,
Michael G. Hurtuk
8691 Crest Court, Burr Ridge, IL 60527

McNaughton DEVELOPMENT, INC.
YOUR LUXURY HOME BUILDER

THE ENCLAVE OF HIGHLAND FIELDS

Dear Residents of Savoy Club,

I am sending this letter because I was hoping for some assistance from the Savoy residents. Years ago, McNaughton Development was involved with the banking institution who took over the Savoy Club from the previous Developer / Builder. Obviously, we wished we purchased the Savoy Club property but our responsibility with the Bank was to sell the property.

Recently, McNaughton developed and built the homes in Lakeside Pointe of Burr Ridge which consisted of 44 lots with ranch and first floor primary bedroom homes, and like Savoy Club was very successful. This type of maintenance free zoning and product is what empty nesters are looking for.

We currently have a 15-acre parcel located on 87th Street and County Line Road under contract. We are zoning this property for 20 units of ranch and first floor primary bedroom homes like Savoy Club. This plan is saving 7 acres of open space and trees. This conservation design of cluster homes is very popular in the new custom home market. We are asking for your support in the form of an email or letter to the Community Development Director or the Mayor. We are hoping that if a favorable response to this zoning and community is received by the Village that our proposed subdivision would also be carefully considered.

We have enclosed a flash drive with a virtual tour of the proposed project, a site plan and other due diligence materials for your review. The Plan Commission meeting is December 5th so if you find our proposal favorable, please send a letter or email to an address listed below and copy us. We attached example letters for ideas. In appreciation of your assistance, we will send you a gift card for the Capri Restaurant in Burr Ridge. If you attend the Village Trustee meeting or Plan Commission meeting on our behalf you will receive a double gift card. If you have any questions about the development feel free to call Paul McNaughton Sr or John Barry at our office. Thank you for your time.

Community Development Director
Janine Farrell
jfarrell@burr-ridge.gov

Mayor of Burr Ridge
Mr. Gary Grasso
ggrasso@burr-ridge.gov

Village of Burr Ridge
7660 S. County Line Rd.
Burr Ridge, IL 60527

McNaughton Development
11s220 S. Jackson Street
Burr Ridge, IL 60527
johnb@mcnaughtondevelopment.com

(Example #1)

My wife and I reside in Savoy Club and have lived in Burr Ridge for many years. The ranch home and first floor primary designs with quality finishes were exactly what we were looking for. We leave for the winter months and feel very reassured about the security of our beautiful home in this type of community. I have a relative right now who would be interested in this site. In fact, with the beauty of this site we might have to do it again! Please approve this project as it is what older adults are looking for in Burr Ridge.

P.S. We would be willing to speak at the Dec. 5th meeting in support of McNaughton

(Example #2)

We live in a McNaughton empty nester development, Savoy Club. We have been informed that McNaughton is trying to zone another 20 lots conservation cluster development on 87th & County Line Road. Please be advised that as a resident of Burr Ridge we believe that this development best suits the Village plans. We have family and friends that would be interested in this type of community. We understand from the information that traffic, market value, environmental and zoning would not be compromised. Please favorably consider this new residential development. Thank you.

(Example #3)

We don't know many people anymore who are looking for the large McMansion type homes that were popular in the 90's, maybe the few that are doing very well. The homes that are 2500 – 3200 with the primary bedroom downstairs loaded with amenities in a gated environment is perfect for Burr Ridge. We understand that the proposed development is gated, private and secluded. Private streets with acres of untouched open land is something we would think the Village would want. We don't believe there would be any difficulty finding people who would want to live in that setting. We find this development favorable and recommend approval of this proposal.

(Example #4)

We wanted to take a moment to say how happy we were to find a single-family ranch home in Burr Ridge that fit our needs without skimping on space or the architectural detail that we were accustomed to. We found what we like to call our "final home" at Savoy Club. Our neighbors are just like us, our kids are grown and we all enjoy the comforts that come with a luxury home in a cluster maintenance free community. We certainly endorse this project after living in our own similar subdivision and knowing firsthand just how ideal this type of residential setting can be for empty nesters.

Village of Burr Ridge
Mayor Gary Grasso
7660 County Line Road
Burr Ridge, IL 60527

Re: Proposed McNaughton Development @ 87th & County Line Road

Dear Mayor:

My wife and I moved into the McNaughton Lakeside Pointe Development one year ago. We have been extremely pleased with the quality of the construction of our new home and the Lakeside Pointe community built by McNaughton Development here in Burr Ridige.

I understand that McNaughton Development is now proposing construction of another development at 87th and County Line Road for twenty homes. I would strongly encourage the board to approve zoning for this project. Like Lakeside Pointe, this new proposed McNaughton development will increase the tax base for the Village of Burr Ridge and certainly add to the sales tax revenue from the restaurants and stores in the Burr Ridge Village Center.

Very Truly Yours,

Robert E. Harrington Jr.
7204 Lakeside Circle
Burr Ridge, IL 60527

cc: Community Development Director Janine Farrell

November 8, 2022

To Greg Trzupek, Plan Commission Chairperson, Burr Ridge
Gary Grasso, Mayor, Burr Ridge

My husband and I reside in Lakeside Pointe, a McNaughton Development community, and have lived in Burr Ridge for several years. The ranch home and first floor primary designs with quality finishes were exactly what we were looking for. We leave for the winter months and feel very reassured about the security of our beautiful home in this type of community. We have relatives right now who would be interested in the proposed 87th & County Line Road site. Our relatives are looking to downsize from Oakbrook, which does not offer NEW single family housing geared towards empty nesters in a beautiful gated community.

In fact when we searched for the new ranch in a western suburban community, Burr Ridge's McNaughton Development, was the ONLY non-condo, high end new single family, first floor primary designs development available which was walkable to a downtown village, and with ease to the airport.

We believe zoning for another 20 lots conservation cluster development on 87th & County Line Road will be good for the Village's market value, and residential growth. Based on our received information, the traffic, environment, and zoning would not be compromised. We advocate for approval of this new residential development project as it is what older adults are looking for in the suburbs. Continue to offer this housing option in Burr Ridge!

P.S. We would be willing to speak at the Dec. 5th meeting in support of McNaughton Development.

Nancy & Brian McKenna
7218 Lakeside Circle
Burr Ridge, Illinois
60527

Cc Janine Farrell
Pam Ewald

From: jackfmonson@icloud.com
To: Gary Grasso; Janine Farrell
Cc: kathyn@mcnaughtondevelopment.com; pamewald@email.com
Subject: The Enclave of Highland Hills
Date: Friday, November 11, 2022 11:19:24 AM

My wife and I are among the first residents of Lakeside Pointe. We are very impressed with the quality of the construction of our house and the rest of the development.
The neighborhood gives a sense of community which we find is very gratifying. The housing plans are unique and well suited for an older clientele. The plans for
The Enclave of Highland Hills appears to incorporate many of the features we enjoy at Lakeside Pointe. Approval of the plans would be a plus for Burr Ridge.

Jack Monson
jackfmonson@icloud.com
[redacted]

From: Niederpruem Gary
To: Janine Farrell; Gary Grasso
Cc: Ewald Pam
Subject: The Enclave of Highland Fields (Proposed McNaughton Development)
Date: Tuesday, November 29, 2022 4:57:34 PM

My wife and I reside in Lakeside Pointe a McNaughton Development community. We recently moved here from the Willowbrook/Hinsdale area.

This McNaughton Development was the only one in the area that offered quality construction with a ranch style home with a first floor primary bedroom. It was exactly what we were looking for. In addition it offered a stand alone home with a great deal of square footage for empty nesters allowing our kids to have a place to stay when they visit.

We believe that Burr Ridge would attract more residents like us if the housing was available. If you look around this area (Western Springs, Hinsdale, Willowbrook, Clarendon Hills etc), this type of housing is either non existent or very hard to come by.

I would recommend approval of this project as it is what older adults are looking for in Burr Ridge.

Carole & Gary Niederpruem

From:	Steven Olson
To:	Gary Grasso; Janine Farrell
Cc:	pamewald@email.com
Subject:	Proposed McNaughton Development 87th and County Line Road
Date:	Friday, November 11, 2022 1:50:07 PM

Dear Mayor Grasso and Ms. Farrell, we live in a McNaughton empty nester development, Lakeside Pointe. We have been informed that McNaughton is trying to zone another 20 lots conservation cluster development on 87th and County Line Road. Please be advised that as residents of Burr Ridge we believe that this development best suits the Village plans. We have friends that would be interested in this type of community. We understand from information that traffic, market value, environmental and zoning would not be compromised. Please favorably consider this new residential development. Thank you. Becky and Steven Olson

From: Paul Petersen
To: Janine Farrell
Cc: [redacted]
Subject: The Enclave of Highland fields
Date: Sunday, November 6, 2022 6:11:03 PM

Honorable Mayor & Commissioner

I am a resident of the McNaughton development Lakeside Pointe for over 3 years.

I am sending this note to encourage approval of their proposed new development.

Here's why:
* when we sold our large home in Clarendon Hills after over 30 years, we found few choices to downsize and remain in an area we enjoy —and what was available was not suited to our new requirements e.g., first floor master, new construction for energy efficiency, modern floor plans, in a nice neighborhood;
* a few months ago I attended a planning meeting regarding a proposed development nearby: very high density, zoning exemption, and unit layouts that were too small and frankly not very similar in character to other burr ridge developments.

We are pleased with lakeside pointe because of build quality, modern floor plans, and even a nice area with curving streets, well landscaped, and close to our friends and the burr ridge commons. We look forward to many years here.

It's important to have similar developments to maintain the prestige of the burr ridge name , higher resale values, and ability to provide seniors with a great option.

Respectfully submitted for your consideration.

Paul Petersen, Esq.
[redacted]

November 4, 2022

Re: Proposed Development of The Enclave of Highland Fields

To: Mr. Mayor and Mr. Chairman

The intent in writing this letter is to support Paul McNaughton and the McNaughton Company in their attempt to develop The Enclave of Highland Fields. I have been nothing but impressed since moving here from LaGrange. Finding a well-built ranch home with a community that is similar in age and interests, along with not having to deal with the needs of a 75-year-old home, was my goal for moving and a goal that I accomplished.

The McNaughton Group have always been responsive to my questions and needs. When they say they will get it done, they do. Their crew have been nothing but nice and knowledgeable.

One other note, after visiting me in my new home, a couple of my friends have shown a lot interest in moving here. They are constantly asking me if anything gone up for sale in Lakeside Point. This morning I forwarded the Enclave plans and I expect they will be reaching out to McNaughton once the project is green lighted.

Please feel free to reach out to me should you need any further information.

Sincerely,

Kelly Pralle

Kelly Pralle

7227 Lakeside Point

Burr Ridge, IL 60527

From: Steve Richmond
To: Janine Farrell
Subject: McNaughton development
Date: Thursday, November 17, 2022 1:34:18 PM

Hello

My name is Steve Richmond residing at 8081 Savoy Club Ct in Burr Ridge.

I’m writing to express my positive impression of the Savoy Club community.

We purchased this home in 2020 and definitely call this our final home. We lived in Naperville where we raised our children and tried to find that perfect home as empty nesters. When we found this home, we couldn’t have been happier. We certainly endorse McNaughton’s project as we believe it will provide familys such as ours the dream setting similar to ours.

Thank you for your time,

Steve and Tina Richmond
8081 Savoy Club Ct
Burr Ridge, IL 60527

11/17/22

Village of Burr Ridge

7660 County Line Road

Burr Ridge, Il, 60527

Attn Mayor Gary Grasso

RECEIVED
NOV 21 2022
VILLAGE OF BURR RIDGE

Subject: The Enclave of Highland Fields

Dear Mayor,

My wife and our family lived in a McNaughton (Bill) built home in Burr Oaks Glen (South) for many years before downsizing to Savoy Club. We not only wanted to down size but to have a first floor master bedroom and maintainence-free conveniences.

I can surely attest to the quality and integrity of McNaughton built homes.

It is easy to see the comparison of The Enclave to Savoy Club: first floor master bedroom, ,private streets, open spaces, trees, etc.

It is without hesitation that I believe Burr Ridge would be enhanced by the addition of the Enclave and I fully recommend that the Village approve this proposal.

Respectfully yours,

Martin E. Wehner

Martin E. Wehner

8044 Savoy Club Court

Burr Ridge, Il 60527

Copy to: Janine Farrell

Community Development Director

Z-26-2022: 525 Village Center Drive (AT&T); Request for a special use for a personal wireless facility as per section VIII.C.2 of the Zoning Ordinance and to amend Ordinance A-834-10-05 to permit alterations to the structure related to the wireless facility.

HEARING:
December 5, 2022

TO:
Plan Commission
Greg Trzupek, Chairman

FROM:
Janine Farrell, AICP
Community Development Director

PETITIONER:
Nexius Solutions, Inc. on behalf of AT&T Mobility Corporation

PETITIONER STATUS:
Leaseholder

PROPERTY OWNER:
BRVC Owner, LLC

EXISTING ZONING:
B-2 Business Planned Unit Development (PUD)

LAND USE PLAN:
Recommends Mixed Uses

EXISTING LAND USE:
Mixed-Use Center

SITE AREA:
20 Acres

SUBDIVISION:
Burr Ridge Village Center

PARKING:
1,145 Spaces

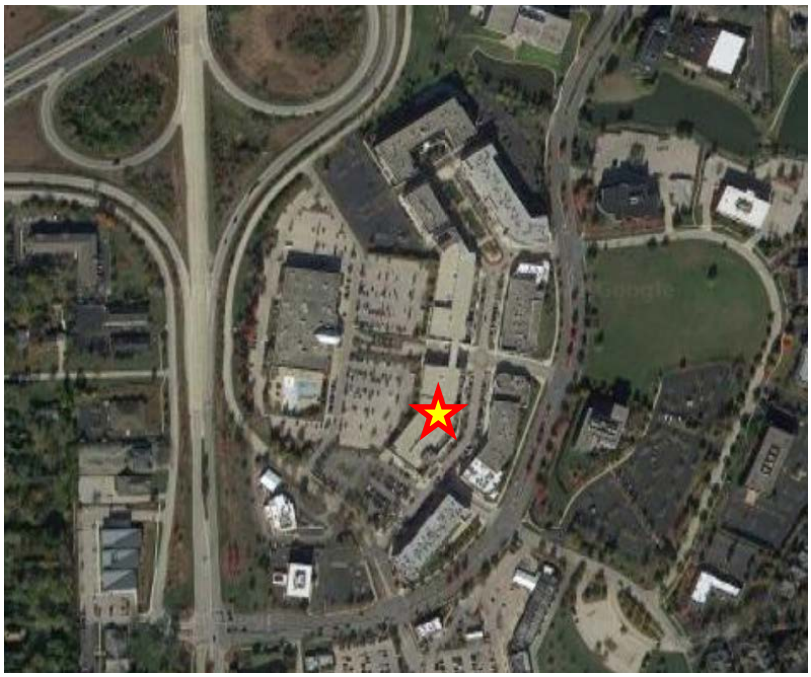

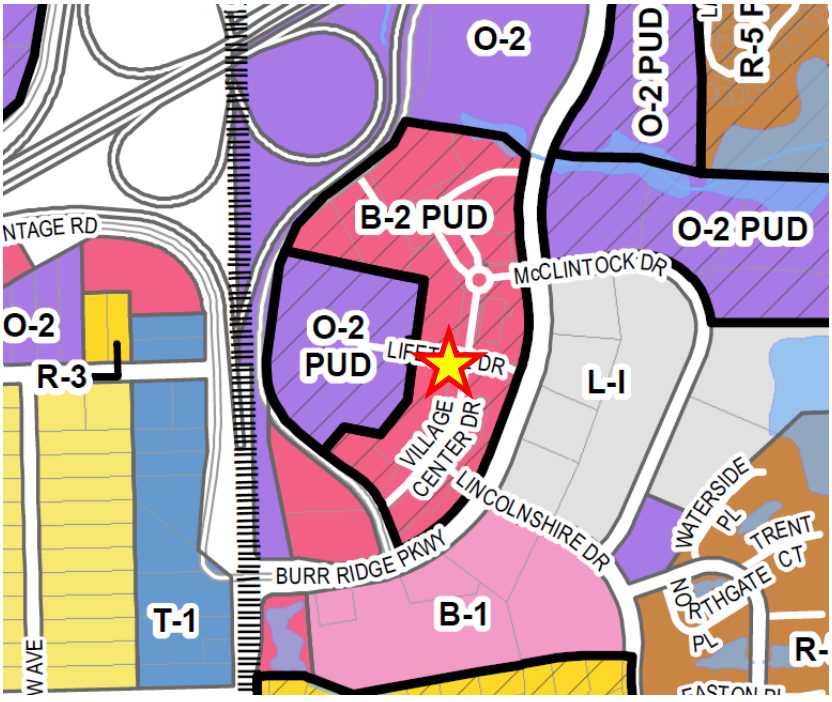

Staff Report and Summary
Z-26-2022: 525 Village Center Drive (AT&T); Special Use, PUD Amendment, and Findings of Fact

The petitioner, Nexius Solutions, Inc. on behalf of AT&T Mobility Corporation, is requesting a special use for a personal wireless facility to be located on the rooftop of a parking garage structure at 525 Village Center Dr. Julie Baniqued with LCC Telecom Services is acting as the agent for the case.

The personal wireless facility will consist of installing antennae and support equipment. The support equipment (cabinets, conduit, generator, and racks) will be located inside of the parking garage adjacent to existing HVAC equipment, within a 14 ft. by 15 ft. leased area. The antennae will be mounted on top of the building, extending 14' and 10'4" above the existing structure. This results in an overall maximum height of 60'; the current building height is 49'8" and 46'. The antennae will be screened by a "new RF transparent screen wall enclosure to match building sections below." On November 7, staff requested specifications on the screen wall enclosure and architectural elevations of each building facade, but as of the writing of this report, this information has not been received.

Zoning Ordinance section IV.V details the regulations for personal wireless facilities. The proposal's compliance with these regulations is detailed below:

- IV.V.1.b: The location attached to an existing structure within a non-residential is permitted but requires a special use in the B-2 district (section VIII.C.2).
- IV.V.2.b: The maximum height permitted cannot exceed 10 ft. above the height of the existing structure unless specifically approved by a special use. The petitioner is proposing the antennae to extend 14 ft. above the structure. Should the Commission recommend approval, a condition has been added to permit the additional height.
- IV.V.4.a: Personal wireless facilities attached to the roof of a structure are required to blend into the architecture of the building. While a screen wall is proposed, there are insufficient details to determine if it blends into the architecture of the building at this time.
- IV.V.6.a-b: The petitioner has provided structural specifications on the antennae and states that the facility will meet FCC regulations.
- IV.V.7: The location of personal wireless facilities on existing structures is preferred.

Public Hearing History

For this specific address at the Village Center, for the parking garage and rooftop, no previous zoning cases were found since the original construction of the building.

Public Comment

No public comments were received.

Findings of Fact and Recommendation

The petitioner has provided findings of fact, which the Plan Commission may adopt if in agreement with those findings. If the Plan Commission chooses to recommend approval of the request for a special use for a personal wireless facility as per section VIII.C.2 of the Zoning Ordinance and to amend Ordinance A-834-10-05 to permit alterations to the structure related to the wireless facility, staff recommends the following conditions:

1. The development shall substantially comply with the submitted plans, attached as Exhibit A.
2. The maximum height permitted is up to 14 ft. above the height of the existing structure.

Appendix

Exhibit A – Petitioner's Materials and Public Notifications

- Petition with narrative
- Authorization from owner
- Compliance with Zoning Ordinance standards and Findings of Fact
- Plans
- Structural Analysis Report
- Mount Analysis Report
- Structural Calculations
- Final Engineering
- Public Notifications

EXHIBIT A

Received
10/21/2022
gf

VILLAGE OF BURR RIDGE

PETITION FOR PUBLIC HEARING
PLAN COMMISSION/ZONING BOARD OF APPEALS

GENERAL INFORMATION (to be completed by Petitioner)

PETITIONER (All correspondence will be directed to the Petitioner): Julie Baniqued

STATUS OF PETITIONER: Authorized Representative

PETITIONER'S ADRESS: 10700 W. Higgins Road, Suite 240, Rosemont, IL 60018

ADDRESS OF SUBJECT PROPERTY: 525 Village Center Drive, Burr Ridge, IL 60527

PHONE: (580) 352-2718

EMAIL: jbaniqued@lcctelecom.com

PROPERTY OWNER: BRVC Owner LLC

PROPERTY OWNER'S ADDRESS: 525 Village Center Drive, Burr Ridge, IL PHONE: (580) 352-2718

PUBLIC HEARING REQUESTED: ✓ Special Use ____ Rezoning ____ Text Amendment ____ Variation(s)

DESCRIPTION OF REQUEST:

Application for Special Use approval for the proposed co-location of a personal wireless service facility on the roof of an existing building at the above referenced address.

Amending PUD Ordinance A-834-10-05 gf

PROPERTY INFORMATION (to be completed by Village staff)

PROPERTY ACREAGE/SQ FOOTAGE: +/- 20 acres EXISTING ZONING: B-2 PUD

EXISTING USE/IMPROVEMENTS: Mixed-use development

SUBDIVISION: Burr Ridge Village Center PUD - Burr Ridge Corporate Park

PIN(S) #: 18-30-300-032-0000 gf

The above information and the attached Plat of Survey are true and accurate to the best of my knowledge. I understand the information contained in this petition will be used in preparation of a legal notice for public hearing. I acknowledge that I will be held responsible for any costs made necessary by an error in this petition.

Julie Baniqued
Petitioner's Signature

10/21/2022
Date of Filing

Site Data Sheet

Applicant:	Nexius Solutions, Inc. 2051 Midway Road Lewisville, TX 75056 AT&T Mobility Corporation 930 National Parkway Schaumburg, IL 60173
Agent:	Julie Baniqued LCC Telecom Services 10700 Higgins Road Suite 240 Rosemont, IL 60018
Personal Wireless Facility Owner:	Nexius 2051 Midway Road Lewisville, TX 75056
Applicant's Interest in the Property:	Leasehold
Property Owner:	BRVC Owner LLC 525 Village Center Drive Burr Ridge, IL 60527
Address of Property:	525 Village Center Drive Burr Ridge, IL 60527
Parcel Number:	18303000320000
Request:	Application for a special use permit and any other approvals or permits necessary to co-locate a personal wireless service facility within a 14'-0" x 15'-0" lease area on the rooftop of an existing building.

Narrative Overview

Nexius Solutions, Inc. (“Nexius”) on behalf of AT&T Mobility Corporation (“AT&T”) seeks approval of a special use permit and any other permits or approvals necessary in order to install a personal wireless service facility on an existing structure located at 525 Village Center Drive, Burr Ridge, IL 60527. Nexius has an agreement with AT&T to develop this site on its behalf. AT&T has acquired the necessary licenses from the Federal Communications Commission (“FCC”) to provide Personal Communications Services (“PCS”) coverage throughout the United States. These licenses include Burr Ridge, Illinois.

The proposed site is located in the General Business District (B-2). Pursuant to Section IV(V) (Regulations for Personal Wireless Service Facilities) of the Burr Ridge Zoning Ordinance, personal wireless service facilities are allowed to be attached on existing structures in non-residential zoning districts with special use approval.

The personal wireless service facility Nexius is proposing to install on the property for AT&T is necessary to provide uninterrupted PCS services to the residents of Burr Ridge, including wireless telephone service, voice paging, messaging and wireless internet, and broadband data transmission. All registered wireless provider’s technology operates at various radio frequency bands allocated by the FCC as part of their license.

Personal wireless service systems operate on a grid system where overlapping cells mesh together, forming a seamless network. No single site can function as a stand-alone entity as each site is interconnected, forming the network. The technical criteria for establishing cell sites are very exacting as to the location and height. The proposed site at 525 Village Center Drive is within the geographic area deemed necessary for AT&T to deliver uninterrupted services.

In accordance with the Burr Ridge Zoning Ordinance, Nexius and AT&T have made application to co-locate a personal wireless service facility. The proposed personal wireless service facility will consist of installing antennae and supportive equipment within a 14’-0” x 15’-0” lease area on the roof of an existing building.

The facility is unstaffed and will require service technicians, in a pick-up/van sized vehicle, to visit the site approximately once per month. The site is entirely self-monitored through a

sophisticated alarm system which is connected to a main switch station. The system alerts personnel to any equipment malfunction or breach of security. There is no need for additional police or fire support. Additionally, there is no impact on the village's utilities such as water, sanitation as they are not used. The only utilities used in connection with the personal wireless service facility are power and land-line telephone.

In accordance with FCC regulations, the personal wireless service facility will not interfere with any form of communications, including but not limited to, land-line phones, cable and satellite television and radio broadcasts. PCS technology has become a vital part of emergency services, aiding local residents and motorists in a variety of situations, thus helping to protect the general public's health, safety and welfare. The proposed wireless telecommunications facility at this site will further enhance goals of providing the most reliable network possible in this area.

The proposed personal wireless service facility will be designed and constructed to meet all applicable governmental and industry safety standards. Specifically, Nexius and AT&T will comply with all FCC and FAA rules and regulations regarding construction requirements and technical standards. Any and all RF emissions are subject to the exclusive jurisdiction of the FCC. Any height, lighting or marking issues are subject to the exclusive jurisdiction of the FAA.

LCC Telecom Services, on behalf of Nexius and AT&T, looks forward to working with Burr Ridge to bring the benefits of the proposed service to the area. The addition of the facility will ensure the best uninterrupted wireless services for the village. This application addresses all standards and satisfies the requirements of the Burr Ridge Zoning Ordinance.

October 6, 2022

Community Development
Village of Burr Ridge
7660 County Line Road
Burr Ridge, IL 60527

RE: 525 Village Center Drive - AT&T – IL4218

Please be advised that LCC Telecom Services on behalf of AT&T Mobility are authorized to apply, pay for, and secure any and all permits, approvals, or other governmental authorizations for AT&T Mobility's proposed cellular site located at 525 Village Center Drive on behalf of the deeded owner, BRVC Owner LLC.

Sincerely,

Name

MANAGER

Title

VILLAGE OF BURR RIDGE
PLAN COMMISSION AND
ZONING BOARD OF APPEALS

Consent to Install Public Notice Sign

The owner of the property referenced below, or an authorized representative of the owner, which is the subject of a public hearing before the Village of Burr Ridge Plan Commission or Zoning Board of Appeals, hereby consents to allow the Village of Burr Ridge to install a public notice sign on the aforesaid property. The public notice sign will be erected 15 to 30 days prior to the public hearing and will remain on the property until it is removed by the Village of Burr Ridge subsequent to a final dispensation of petition request.

Street Address of Subject Property: 525 Village Center Drive, Burr Ridge, IL 60527

Property Owner or Petitioner: Julie Baniqued

(Print Name)

Julie Baniqued

(Signature)


Nov 18, 2022 at 10:59:02 AM
565 Village Center Dr
Burr Ridge IL 60527
United States
Burr Ridge Village Center
525
SOUTH GARAGE
HAMPTON SOCIAL
TOPAZ


Nov 18, 2022 at 10:59:09 AM
565 Village Center Dr
Burr Ridge IL 60527
United States
Burr Ridge Village Center
525
NOTICE
NO PACE
COMMUTER PARKING
VIOLATORS WILL BE
TOWED
SOUTH GARAGE

Personal Wireless Service Facility Standards

The proposed site also meets the requirements of Chapter 4(V) - Regulations for Personal Wireless Service facilities. The following are requirements that apply to rooftop facilities.

Permitted Locations

1. A special use is required and may be requested for any public utility service use that satisfies the definition of personal wireless service facility, as defined herein, provided that the proposed location satisfies any one of the criteria listed below.
    - The proposed location of the Personal Wireless Service Facilities is attached to an existing building or structure within a non-residential district.
    - The proposed location of the Personal Wireless Service Facilities is within a manufacturing district and is not within 1000 feet of a residential district or is separated from residential districts by a freeway or principal arterial as defined by the Village of Burr Ridge Comprehensive Plan.
    - The proposed location of the Personal Wireless Service Facilities is located on a property owned by or used for municipal services.

The proposed personal wireless service facility will be located on an existing building within a non-residential district, General Business (B-2).

Maximum Height for Personal Wireless Service Facilities

1. An applicant for approval of a Personal Wireless Facility shall demonstrate that the Personal Wireless Facilities do not exceed the minimum height required to function satisfactorily. Under any circumstances, Personal Wireless Facilities shall not exceed the following height restrictions unless otherwise specifically approved by grant of a special use permit as per Section IV.V.3, herein:
    - If mounted on the roof of an existing building or structure, the height of an antenna shall not exceed 10 feet above the height of the existing structure.
    - An antenna attached to the side of a building, structure, or tower, shall not extend above the roof of the building, structure, or tower.

The proposed personal wireless service facility will not exceed the height restrictions outlined above.

Screening and Site Location for Personal Wireless Service Facilities Attached to Existing Buildings or Structures

1. Personal Wireless Facilities may be attached to the wall or roof of a building subject to height restrictions herein. Such Facilities shall not be attached to the front wall of a building unless it can be shown that other locations are not feasible and that the Facilities shall be made to effectively blend into the architecture of the building.

The proposed personal wireless service facility will be located on the roof of an existing building, and therefore not on the front wall of the building.

2. Personal Wireless Facilities and their support structures attached to an existing building or structure shall be of a color identical to the building or that maximizes the blending of the Facilities and support structures into the architecture of the building or structure.

The proposed facility includes a new RF transparent screen that is intended to look like the surrounding building design.

3. Personal Wireless Facilities and their support structures attached to an existing building or structure shall not extend more than 24 inches beyond the wall of such building or structure.

The proposed facility will not extend past 24 inches beyond the building wall as restricted in the Burr Ridge Zoning Ordinance.

Compliance with Governmental and other Safety Regulations

1. The applicant shall demonstrate that the proposed antennas and support structures are safe and that surrounding areas will not be negatively affected by support structure failure, falling ice, or other debris. All support structures shall be fitted with anti-climbing devices, as approved by the manufacturers.

A structural analysis and stealth design calculations demonstrating the safety of the proposed personal wireless service facility design were submitted as part of this application.

2. All towers and antennas shall comply with the current standards and regulations of the Federal Communications Commission, the Federal Aviation Administration, and any other agency of the federal government with the authority to regulate towers and antennas.

The proposed personal wireless service facility will comply with all current standards and regulations of the FCC and FAA.

Findings of Fact – Special Use
Burr Ridge Zoning Ordinance

Address:
525 Village Center Drive, Burr Ridge, IL 60527

As per Section XII.K.7 of the Village of Burr Ridge Zoning Ordinance, for a special use to be approved, the petitioner must confirm all of the following findings by providing facts supporting each finding.

a. The use meets a public necessity or otherwise provides a service or opportunity that is not otherwise available within the Village and is of benefit to the Village and its residents.

Personal wireless service systems operate on a grid system where overlapping cells mesh together, forming a seamless network. No single site can function as a stand-alone entity as each site is interconnected, forming the network. The technical criteria for establishing cell sites are very exacting as to the location and height. The proposed site at 525 Village Center Drive is within the geographic area deemed necessary for AT&T and various other wireless telecommunications providers to deliver uninterrupted services. The proposed site will particularly provide improved voice and data services to businesses and visitors to the Burr Ridge Center complex. This improved service will benefit Burr Ridge and its residents.

b. The establishment, maintenance, or operation of the special use will not be detrimental to, or endanger the public health, safety, morals, comfort, or general welfare.

The proposed personal wireless service facility will not be detrimental to or endanger the public health, safety, morals, comfort, or general welfare. Wireless facilities provide an alternate communication system which has repeatedly proven its effectiveness in emergency situations and is commonly being used by police and fire departments to protect the general public's health, safety, and welfare. Also, wireless facilities do not interfere with any other form of communications whether public or private, or in any way endanger the general welfare by reason of excessive production of traffic, noise, smoke, fumes, glare, or odors. Lastly, all personal wireless service facilities are governed by FCC and FAA regulations. As such, all spectrum used to provide a wireless signal are allocated by the FCC which has deemed the signals will not cause any healthrelated affects.

c. The special use will not be injurious to the uses and enjoyment of other property in the immediate vicinity for the purposes already permitted, nor substantially diminish or impair property values within the neighborhood in which it is to be located.

The proposed personal wireless service facility will be designed, constructed, operated, and maintained so as not to diminish the opportunity for surrounding properties to be used, enjoyed, and developed as zoned. The facility will be situated on a portion of the existing structure roof which will minimize the visual impact from ground level. The site does not generate noise or traffic which would be detrimental to surrounding properties. The proposed facility also will not impair an adequate supply of light and air to adjacent property, increase the danger of fire, nor will it substantially diminish or impair property values within the General Business District. Overall, the improved wireless signal aims to enhance the usage and development of the surrounding properties.

d. The establishment of the special use will not impeded the normal and orderly development and improvement of the surrounding property for uses permitted in the district.

The operation of the proposed personal wireless service facility will not impede on normal and orderly development and improvement of surrounding properties due to its diminutive size, discreet location on the roof of an existing building, and being unstaffed.

e. Adequate utilities, access roads, drainage and/ or necessary facilities have been or will be provided.

No access road or drainage is necessary for the proposed co-location of a personal wireless service facility. The facility will only use power and fiber utilities that are already existing on site.

f. Adequate measures have been or will be taken to provide ingress and egress so designed as to minimize traffic congestion in the public streets.

The proposed personal wireless service facility will use the existing roof access for the building. This facility is unstaffed and will be visited approximately once per month by a technician in a van sized vehicle. There will be no traffic congestion in the public streets as a result of the installation at this property.

g. The proposed special use is not contrary to the objectives of the Official Comprehensive Plan of the Village of Burr Ridge as amended.

The proposed personal wireless service facility will align with the general spirit and objectives of the Official Comprehensive Plan of the Village of Burr Ridge.

h. The special use shall, in other respects, conform to the applicable regulations of the district in which it is located, except as such regulations may, in each instance, be modified pursuant to the recommendations of the Plan Commission or, if applicable, the Zoning Board of Appeals.

The proposed personal wireless service facility is permitted as a special use in the B-2, General Business District. The proposed use will comply with all appropriate regulations and conditions of the Burr Ridge Zoning Ordinance.

Special Use Permit Standards

For each application for a Special Use Permit, the Community Development Director verifies if the application is complete, and then forwards the complete applications to the Plan Commission who reports to the Village Board of Trustees its findings and recommendations. The findings and recommendations from the Plan Commission include any stipulations of additional conditions and guarantees that such conditions will be complied with when they are deemed necessary for the protection of the public interest. The Plan Commission will not recommend a special use approval to the Village Board of Trustees unless the following standards are met.

1. The use meets a public necessity or otherwise provides a service or opportunity that is not otherwise available within the Village and is of benefit to the Village and its residents.

   Personal wireless service systems operate on a grid system where overlapping cells mesh together, forming a seamless network. No single site can function as a stand-alone entity as each site is interconnected, forming the network. The technical criteria for establishing cell sites are very exacting as to the location and height. The proposed site at 525 Village Center Drive is within the geographic area deemed necessary for AT&T and various other wireless telecommunications providers to deliver uninterrupted services. The proposed site will particularly provide improved voice and data services to businesses and visitors to the Burr Ridge Center complex. This improved service will benefit Burr Ridge and its residents.

2. The establishment, maintenance, or operation of the special use will not be detrimental to, or endanger the public health, safety, morals, comfort, or general welfare.

   The proposed personal wireless service facility will not be detrimental to or endanger the public health, safety, morals, comfort, or general welfare. To the contrary, enhanced wireless telecommunications will be beneficial to the health, safety, morals, comfort, and welfare of the area. Wireless facilities provide an alternate communication system which has repeatedly proven its effectiveness in emergency situations and is commonly being used by police and fire departments to protect the general public's health, safety, and welfare. Also, the location on an existing structure and due to the diminutive size of the proposed equipment and lease area, the proposed site will not have an adverse effect on the surrounding properties nor the character of the area. Wireless facilities do not interfere with any other form of communications whether public or private, or in any way endanger the general welfare by reason of excessive production of traffic, noise, smoke, fumes, glare, or odors. Lastly, all personal wireless service facilities are governed by FCC and FAA regulations. As such, all spectrum

used to provide a wireless signal are allocated by the FCC which has deemed the signals will not cause any health-related affects.

3. The special use will not be injurious to the uses and enjoyment of other property in the immediate vicinity for the purposes already permitted, nor substantially diminish or impair property values within the neighborhood in which it is to be located.

   The proposed personal wireless service facility will be designed, constructed, operated, and maintained so as not to diminish the opportunity for surrounding properties to be used, enjoyed, and developed as zoned. The facility will be situated on a portion of the existing structure roof which will minimize the visual impact from ground level. The site does not generate noise or traffic which would be detrimental to surrounding properties. The proposed facility also will not impair an adequate supply of light and air to adjacent property, increase the danger of fire, nor will it substantially diminish or impair property values within the General Business District. Overall, the improved wireless signal aims to enhance the usage and development of the surrounding properties.

4. The establishment of the special use will not impede the normal and orderly development and improvement of the surrounding property for uses permitted in the district.

   The operation of the proposed personal wireless service facility will not impede on normal and orderly development and improvement of surrounding properties due to its diminutive size, discreet location on the roof of an existing building, and being unstaffed.

5. Adequate utilities, access roads, drainage and/or necessary facilities have been or will be provided.

   No access road or drainage is necessary for the proposed co-location of a personal wireless service facility. The facility will only use power and fiber utilities that are already existing on site.

6. Adequate measures have been or will be taken to provide ingress and egress so designed as to minimize traffic congestion in the public streets.

   The proposed personal wireless service facility will use the existing roof access for the building. This facility is unstaffed and will be visited approximately once per month by a technician in a van sized vehicle. There will be no traffic congestion in the public streets as a result of the installation at this property.

7. The proposed special use is not contrary to the objectives of the Official Comprehensive Plan of the Village of Burr Ridge as amended.

The proposed personal wireless service facility will align with the general spirit and objectives of the Official Comprehensive Plan of the Village of Burr Ridge.

8. The special use shall, in all other respects, conform to the applicable regulations of the district in which it is located, except as such regulations may, in each instance, be modified pursuant to the recommendations of the Plan Commission or, if applicable, the Zoning Board of Appeals.

   The proposed personal wireless service facility is permitted as a special use in the B-2, General Business District. The proposed use will comply with all appropriate regulations and conditions of the Burr Ridge Zoning Ordinance.

SITE PHOTO



PROJECT : NSB
SITE # : IL4218
FA # : 15515920
PTN # : 3301A0YCJ5
PACE # : MRCHI058280
JURISDICTION : VILLAGE OF BURR RIDGE

SITE NAME : ILL04218
ADDRESS : 525 VILLAGE CENTER DRIVE
BURR RIDGE, IL 60527

AT&T MOBILITY

CONTRACTOR SHALL CONTACT LANDLORD PRIOR TO CONSTRUCTION TO CONFIRM IF ROOF VENDOR OR WARRANTY IS IN PLACE. ALL WORK WILL BE COORDINATED WITH LANDLORD ROOFER FOR REPAIRS.

PROJECT INFORMATION

SITE NAME:	ILL04218
COUNTY:	COOK
ADDRESS:	525 VILLAGE CENTER DRIVE BURR RIDGE, IL 60527
ZONING DISTRICT:	N/A
SITE NUMBER:	IL4218
FA NUMBER:	15515920
PTN #:	3301A0YCJ5
PACE:	MRCHI058280
USID:	317314
LATITUDE:	41° 45' 9.468" N (41.7526300°)
LONGITUDE:	87° 54' 44.748" W (-87.9124300°)
PROPERTY OWNER:	TBD
POWER COMPANY:	COMED PHONE (800) 334-7661
FIBER VENDOR:	AT&T PHONE (888) 901-2779
APPLICANT:	AT&T WIRELESS 95 W. ALGONQUIN ROAD, ARLINGTON HEIGHTS, IL 60005

EQUIPMENT LEASE AREA:	210 SQ FT
ANTENNAS LEASE AREAS:	380 SQ FT
TOTAL LEASE AREAS:	590 SQ FT

PROJECT CONSULTANTS

PROJECT MANAGEMENT: EMAIL:	NEXIUS CONTACT: KRISTEN WEISS KRISTEN.WEISS@NEXIUS.COM PHONE: (412) 443-1985
ARCHITECTURE & ENGINEERING:	JOHN M BANKS 604 FOX GLEN BARRINGTON, IL 60010 PHONE: (847)-277-0070
SITE ACQUISITION:	LCC TELECOM SERVICE 10700 WEST HIGGINS RD., SUITE 240 ROSEMONT, IL 60018 CONTACT: MARK KORSO PHONE: (847)380-2484 EMAIL: MKORSO@LCCTELECOM.COM
AT&T CONSTRUCTION MANAGER:	IFEY ONUA PHONE: (847) 330-3471 EMAIL: IO1826@ATT.COM

SCOPE OF WORK

THIS IS NOT AN ALL INCLUSIVE LIST. CONTRACTOR SHALL UTILIZE SPECIFIED EQUIPMENT PART OR ENGINEER APPROVED EQUIVALENT. CONTRACTOR SHALL VERIFY ALL NEEDED EQUIPMENT TO PROVIDE A FUNCTIONAL SITE.
THE PROJECT GENERALLY CONSISTS OF THE FOLLOWING:
INSTALL (12) PROPOSED AT&T PANEL ANTENNAS (4) PER SECTOR (TYP. OF 3 SECTORS), INSTALL (15) PROPOSED AT&T RRUS (5) PER SECTOR (TYP. OF 3 SECTORS), INSTALL PROPOSED AT&T WUC, PPC AND GENERATOR ON PLATFORM. INSTALL (6) PROPOSED AT&T DC TRUNK LINES, INSTALL PROPOSED AT&T CIENA & ELECTRIC PANEL ON HANDRAIL, INSTALL (2) PROPOSED AT&T 24 PAIR FIBER LINES, INSTALL PROPOSED DC/FIBER JUMPERS.

VICINITY MAP

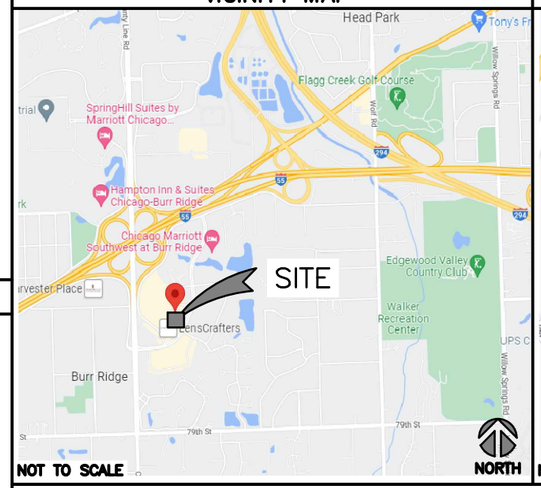

NOT TO SCALE

LOCAL MAP

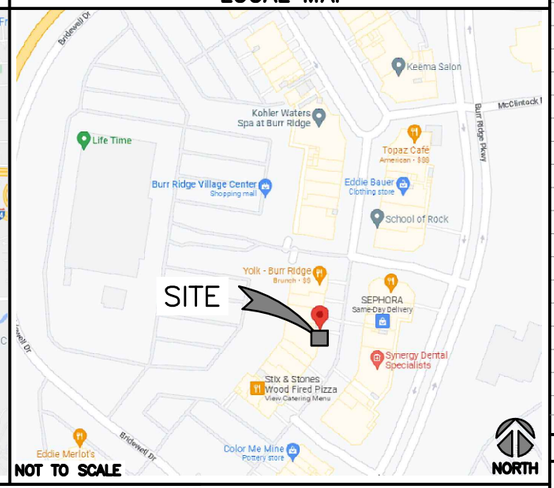

NOT TO SCALE

SCAN FOR DRIVING DIRECTIONS

DRAWING INDEX

T1	TITLE SHEET
SP1	NOTES & SPECIFICATIONS
SP2	NOTES & SPECIFICATIONS
SP3	NOTES & SPECIFICATIONS
SP4	NOTES & SPECIFICATIONS
A1	SITE PLAN
A2	COMPOUND PLAN & LEGEND
A3	BUILDING ELEVATION
A3.1	BUILDING ELEVATION
A4	ANTENNA PLAN
A5	SCHEDULE & CABLE NOTES
A6	ANTENNA, RRH, RRUS, RAYCAP DETAILS
A6.1	ANTENNA, RRH, RRUS, RAYCAP DETAILS
A7, A7.1	EQUIPMENT DETAILS
A8	CABLE TRAY DETAILS
E1	UTILITY PLAN AND DETAILS
E2	ELECTRICAL PANEL SCHEDULE
E3	SHELTER GROUNDING PLAN & DETAILS
E4	GENERIC ANTENNA CABLING DIAGRAM
E5, E6	GROUNDING DETAILS
RF	RFDS PLUMBING DIAGRAM
SIGNAGE	SIGNAGE REQUIREMENTS
S1	EQUIPMENT PLATFORM STRUCTURAL DETAILS
S2	EQUIPMENT PLATFORM STRUCTURAL DETAILS
S3	EQUIPMENT PLATFORM STRUCTURAL DETAILS
S4, S5	ANTENNAS FRAME STRUCTURAL DETAILS
	RAYCAP FINAL ENGINEERING DRAWINGS BY VECTOR ENGINEERS, DATED 06/22/2022

811 Know what's below. Call before you dig.

TO OBTAIN LOCATION OF PARTICIPANTS UNDERGROUND FACILITIES BEFORE YOU DIG IN ILLINOIS, CALL ILLINOIS ONE CALL
TOLL FREE: 1-800-892-0123 OR
www.illinois1call.com
ILLINOIS STATUTE REQUIRES MIN OF 2 WORKING DAYS NOTICE BEFORE YOU EXCAVATE

CODE COMPLIANCE

- TIA/EIA-222-H
- 2012 INTERNATIONAL BUILDING CODE (IBC)
- NFPA 70, NATIONAL ELECTRIC CODE (NEC), 2011 EDITION
- 2015 INTERNATIONAL ENERGY CODE

REFERENCE MATERIALS

- CONTRACTOR TO USE LATEST VERSION OF THE RFDS DATED 05/03/22 WITH THE CD's PER SCOPE OF WORK.

SPECIAL NOTES

- ALL WORK SHALL BE INSTALLED IN CONFORMANCE WITH CURRENT AT&T CONSTRUCTION INSTALLATION GUIDE.
- EXISTING CONDITIONS WILL BE CHANGED & VERIFIED IN FIELD. IF SIGNIFICANT DEVIATIONS OR DETERIORATION ARE ENCOUNTERED AT THE TIME OF CONSTRUCTION, A REPAIR PERMIT WILL BE OBTAINED & CONTRACTOR SHALL NOTIFY ENGINEER IMMEDIATELY.
- THESE DRAWINGS ARE FULL SIZE & SCALEABLE ON 11"X17" SHEET SIZE.
- STATEMENT THAT COMPLIANCE WITH THE ENERGY CODE IS NOT REQUIRED. -SCOPE OF WORK DOES NOT INVOLVE MODIFICATIONS TO EXTERIOR ENVELOPE OF BUILDING, HVAC SYSTEMS OR ELECTRICAL LIGHTING.

DO NOT SCALE DRAWINGS

CONTRACTOR SHALL VERIFY ALL PLANS & EXISTING DIMENSIONS & CONDITIONS ON THE JOB SITE & SHALL IMMEDIATELY NOTIFY THE ARCHITECT OR ENGINEER IN WRITING OF ANY DISCREPANCIES BEFORE PROCEEDING WITH THE WORK OR BE RESPONSIBLE FOR SAME.

THE INFORMATION CONTAINED IN THIS SET OF CONSTRUCTION DOCUMENTS IS PROPRIETARY BY NATURE. ANY USE OR DISCLOSURE OTHER THAN THAT WHICH RELATES TO CARRIER SERVICES IS STRICTLY PROHIBITED.

AT&T
930 NATIONAL PARKWAY
SCHAUMBURG, IL 60173

NEXIUS
DANIEL KALINA
SITE ACQUISITION SPECIALIST
PHONE: 630-946-7741
DANIEL.KALINA@NEXIUS.COM

WESTCHESTER SERVICES LLC
604 FOX GLEN
BARRINGTON, IL 60010
PHONE: 847-277-0070
AE@Westchesterservices.com

JOHN M. BANKS
ARCHITECT
604 FOX GLEN
BARRINGTON, IL 60010
TELEPHONE: 847-277-0070
FAX : 847-277-0080
jbanks@westchesterservices.com

NSB
15515920/IL4218
ILL04218
525 VILLAGE CENTER DRIVE
BURR RIDGE, IL 60527

REVISIONS

REV.	DATE	DESCRIPTION	INITIALS
0	07/05/22	PERMIT/CONSTRUCTION	CG
A	06/09/22	PRELIMINARY CD	DS

NOT FOR CONSTRUCTION UNLESS LABELED AS CONSTRUCTION SET

07/05/22

STATE OF ILLINOIS JOHN M. BANKS 001-014586 REGISTERED ARCHITECT

"I HEREBY CERTIFY THAT THESE PLANS WERE PREPARED BY ME OR UNDER MY DIRECT SUPERVISION AND THAT I AM A DULY REGISTERED ARCHITECT UNDER THE LAWS OF THE STATE OF ILLINOIS"
EXP. DATE 11/30/22

SHEET TITLE
TITLE SHEET

SHEET NUMBER
T1

GENERAL NOTES:

1. FOR THE PURPOSE OF CONSTRUCTION DRAWING, THE FOLLOWING DEFINITIONS SHALL APPLY:
   CONTRACTOR / CM – NEXIUS
   SUB–CONTRACTOR – PER TRADE
   OWNER – AT&T WIRELESS
2. SITE WORK (IF APPLICABLE) SHALL BE COMPLETED AS INDICATED ON THE DRAWINGS AND PROJECT SPECIFICATIONS.
3. DRAWINGS PROVIDED HERE ARE NOT TO BE SCALED AND ARE INTENDED TO DEPICT THE DESIGN INTENT OF THE INSTALLATION.
4. ANY MATERIALS FURNISHED AND INSTALLED SHALL BE IN STRICT ACCORDANCE WITH ALL APPLICABLE CODES, REGULATIONS, AND ORDINANCES. SUBCONTRACTOR SHALL ISSUE ALL APPROPRIATE NOTICES AND COMPLY WITH ALL LAWS, ORDINANCES, RULES, REGULATIONS, AND LAWFUL ORDERS OF ANY PUBLIC AUTHORITY REGARDING THE PERFORMANCE OF THE WORK.
5. THE SUBCONTRACTOR SHALL INSTALL ALL EQUIPMENT AND MATERIALS IN ACCORDANCE WITH MANUFACTURER'S RECOMMENDATIONS UNLESS SPECIFICALLY STATED OTHERWISE.
6. IF THE SPECIFIED EQUIPMENT CANNOT BE INSTALLED AS SHOWN ON THESE DRAWINGS, THE SUBCONTRACTOR SHALL DOCUMENT & PROPOSE AN ALTERNATIVE INSTALLATION SPACE FOR APPROVAL BY THE CONTRACTOR.
7. CONTRACTOR / SUBCONTRACTOR SHALL RESTORE AND REPAIR ANY DAMAGED AREAS CAUSED BY CONSTRUCTION.
8. SUBCONTRACTOR SHALL VERIFY ALL EXISTING DIMENSIONS AND CONDITIONS PRIOR TO COMMENCING ANY WORK. ALL DIMENSIONS OF EXISTING CONSTRUCTION SHOWN ON THE DRAWINGS MUST BE VERIFIED. SUBCONTRACTOR SHALL NOTIFY THE CONTRACTOR OF ANY DISCREPANCIES PRIOR TO PROCEEDING WITH CONSTRUCTION. CONTRACTOR SHALL VERIFY EXISTING BURIED AND OVERHEAD UTILITIES PRIOR TO EXCAVATION. CONTRACTOR SHALL REPAIR ANY UTILITIES DAMAGED DURING THE COURSE OF CONSTRUCTION AND COORDINATE ANY REPAIRS WITH UTILITY COMPANY.
9. N /A
10. N/A
11. SUBCONTRACTOR SHALL LEGALLY AND PROPERLY DISPOSE OF ALL SCRAP MATERIALS SUCH AS COAXIAL CABLES AND OTHER ITEMS REMOVED FROM THE EXISTING FACILITY.

SITE PREPARATION:

SUB–CONTRACTOR'S SCOPE OF WORK

1. PROTECTION OF EXISTING TREES,VEGETATION AND LANDSCAPING MATERIALS WHICH MIGHT BE DAMAGED BY CONSTRUCTION ACTIVITIES.
2. CLEARING AND GRUBBING OF STUMPS, VEGETATION, DEBRIS, RUBBISH, DESIGNATED TREES, AND SITE IMPROVEMENTS.
3. TOPSOIL STRIPPING AND STOCKPILING.
4. TEMPORARY PROTECTION OF ADJACENT PROPERTY, STRUCTURES, BENCHMARKS, AND MONUMENTS.

SUB–CONTRACTORS QUALITY ASSURANCE

1. SUB–CONTRACTOR SHALL BE COMPLETELY RESPONSIBLE FOR CONTAINMENT OF SEDIMENT AND CONTROL OF EROSION ON SITE, ANY DAMAGE TO ADJACENT OR DOWNSTREAM PROPERTIES WILL BE CORRECTED BY THE SUB–CONTRACTOR AT NO EXPENSE TO THE OWNER.
2. SUB–CONTRACTOR SHALL MAINTAIN ADEQUATE DRAINAGE AT ALL TIMES. DO NOT ALLOW WATER TO STAND OR POND. ANY DAMAGE TO STRUCTURES OR WORK ON SITE CAUSED BY INADEQUATE MAINTENANCE OF DRAINAGE WILL BE THE RESPONSIBILITY OF THE SUB–CONTRACTOR AND COST ASSOCIATED WITH REPAIRS FOR SUCH DAMAGE WILL BE AT THE SUB–CONTRACTORS EXPENSE.

SITE WORK:

EARTHWORK AND DRAINAGE

PART 1 – GENERAL

1. WORK INCLUDED: SEE SITE PLAN.

2. DESCRIPTIONS

ACCESS DRIVE W/ TURNAROUND AREA, LEASE AREA, AND IF APPLICABLE UNDERGROUND UTILITY EASEMENTS ARE TO BE CONSTRUCTED TO PROVIDE A WELL DRAINED, EASILY MAINTAINED, EVEN SURFACE FOR MATERIAL AND EQUIPMENT DELIVERIES AND MAINTENANCE PERSONNEL ACCESS.

3. QUALITY ASSURANCE

A. APPLY SOIL STERILIZER IN ACCORDANCE WITH MANUFACTURER'S RECOMMENDATIONS (AS NEEDED).
B. APPLY AND MAINTAIN GRASS SEED AS RECOMMENDED BY THE SEED PRODUCER (IF REQUIRED).
C. PLACE AND MAINTAIN VEGETATION LANDSCAPING, IF INCLUDED WITHIN THE CONTRACT, AS RECOMMENDED BY NURSERY INDUSTRY STANDARDS.

4. SEQUENCING

A. CONFIRM SURVEY STAKES AND SET ELEVATION STAKES PRIOR TO ANY CONSTRUCTION.
B. COMPLETELY GRUB THE ACCESS DRIVE W/ TURNAROUND, UNDERGROUND UTILITY EASEMENTS, (IF APPLICABLE) AND LEASE AREA PRIOR TO FOUNDATION CONSTRUCTION, PLACEMENT OF BACKFILL AND SUB–BASE MATERIAL.
C. CONSTRUCT TEMPORARY CONSTRUCTION AREA ALONG ACCESS DRIVE.
D. BRING THE LEASE AREA AND ACCESS DRIVE W/ TURNAROUND TO BASE COURSE ELEVATION PRIOR TO INSTALLING FOUNDATION.
E. APPLY SOIL STERILIZER PRIOR TO PLACING BASE MATERIALS.
F. GRADE, SEED, FERTILIZE, AND MULCH ALL AREAS DISTURBED BY CONSTRUCTION (INCLUDING UNDERGROUND UTILITY EASEMENTS) IMMEDIATELY AFTER BRINGING LEASE AREA AND ACCESS DRIVE W/ TURNAROUND TO BASE COURSE ELEVATION, WATER TO ENSURE GROWTH.
G. REMOVE GRAVEL FROM TEMPORARY CONSTRUCTION ZONE TO AN AUTHORIZED AREA OR AS DIRECTED BY PROJECT MANAGER.
H. AFTER APPLICATIONS OF FINAL SURFACES, APPLY SOIL STERILIZER TO STONE SURFACES.

5. SUBMITTALS

A. BEFORE CONSTRUCTION IF LANDSCAPING IS APPLICABLE TO THE CONTRACT, SUBMIT TWO COPIES OF THE LANDSCAPE PLAN UNDER NURSERY LETTERHEAD. IF A LANDSCAPE ALLOWANCE WAS INCLUDED IN THE CONTRACT, PROVIDE AN ITEMIZED LISTING OF PROPOSED COSTS ON NURSERY LETTERHEAD (REFER TO PLANS FOR LANDSCAPING REQUIREMENTS).

B. AFTER CONSTRUCTION
1. MANUFACTURER'S DESCRIPTION OF PRODUCT AND WARRANTY STATEMENT ON SOIL STERILIZED.
2. MANUFACTURER'S DESCRIPTION OF PRODUCT ON GRASS SEED AND FERTILIZER
3. LANDSCAPING WARRANTY STATEMENT.

6. WARRANTY

A. IN ADDITION TO THE WARRANTY ON ALL CONSTRUCTION COVERED IN THE CONTRACT DOCUMENTS, THE CONTRACTOR SHALL REPAIR ALL DAMAGE AND RESTORE AREA AS CLOSE TO ORIGINAL CONDITION AS POSSIBLE AT SITE AND SURROUNDINGS.
B. SOIL STERILIZATION APPLICATION TO GUARANTEE VEGETATION FREE ROAD AND SITE AREAS FOR ONE YEAR FROM DATE OF FINAL INSPECTION.
C. DISTURBED AREAS WILL REFLECT GROWTH OF NEW GRASS COVER PRIOR TO FINAL INSPECTION.
D. LANDSCAPING, IF INCLUDED WITHIN THE SCOPE OF THE CONTRACT, WILL BE GUARANTEED FOR ONE YEAR FROM DATE OF FINAL INSPECTION.

PART 2 – PRODUCTS

1. MATERIALS

A. SOIL STERILIZER SHALL BE EPA–REGISTERED, PRE–EMERGENCE LIQUID:

TOTAL KILL PRODUCT 910 EPA 10292–7
PHASAR CORPORATION P.O. BOX 5123 DEARBORN, MI 48128 (313) 563–8000
AMBUSH HERBICIDE EPA REGISTERED
FRAMAR INDUSTRIAL PRODUCTS 1435 MORRIS AVE. UNION, NJ 07083 (800) 526–4924

B. ROAD AND SITE MATERIALS SHALL CONFORM TO TDOT SPECIFICATIONS FILL MATERIAL (UNLESS OTHERWISE NOTED) – ACCEPTABLE SELECT FILL SHALL BE IN ACCORDANCE WITH STATE DEPARTMENT OF HIGHWAY AND TRANSPORTATION STANDARD SPECIFICATIONS.

C. SOIL STABILIZER FABRIC SHALL BE MIRAFI – 500X.

PART 3 – EXECUTION

1. INSPECTIONS

LOCAL BUILDING INSPECTORS SHALL BE NOTIFIED NO LESS THAN 48 HOURS IN ADVANCE OF CONCRETE POURS, UNLESS OTHERWISE SPECIFIED BY JURISDICTION.

2. PREPARATION

A. CLEAR TREES, BRUSH AND DEBRIS FROM LEASE AREA, ACCESS DRIVE W/ TURN–AROUND AND UNDER GROUND UTILITY EASEMENTS AS REQUIRED FOR CONSTRUCTION.
B. PRIOR TO OTHER EXCAVATION AND CONSTRUCTION, GRUB ORGANIC MATERIAL TO A MINIMUM OF SIX (6) INCHES BELOW GRADE.
C. UNLESS OTHERWISE INSTRUCTED BY AT&T, TRANSPORT ALL REMOVED TREES, BRUSH AND DEBRIS FROM THE PROPERTY TO AN AUTHORIZED LANDFILL.
D. PRIOR TO PLACEMENT OF FILL OR BASE MATERIALS, ROLL THE SOIL.
E. WHERE UNSTABLE SOIL CONDITIONS ARE ENCOUNTERED, LINE THE AREAS WITH STABILIZER MAT PRIOR TO PLACEMENT OF FILL OR BASE MATERIAL.

3. INSTALLATION

A. GRADE OR FILL THE LEASE AREA AND ACCESS DRIVE W/ TURNAROUND AS REQUIRED IN ORDER THAT UPON DISTRIBUTION OF SPOILS, RESULTING FROM EXCAVATIONS, THE RESULTING GRADE WILL CORRESPOND WITH SAID SUB–BASE COURSE. ELEVATIONS ARE TO BE CALCULATED FROM BENCHMARK, FINISHED GRADES, OR INDICATED SLOPES.
B. CLEAR EXCESS SPOILS, IF ANY, FROM JOB SITE AND DO NOT SPREAD BEYOND THE LIMITS OF PROJECT AREA UNLESS AUTHORIZED BY PROJECT MANAGER AND AGREED TO BY LANDOWNER.
C. BRING THE ACCESS DRIVE W/ TURNAROUND TO BASE COURSE ELEVATION TO FACILITATE CONSTRUCTION AND OBSERVATION DURING CONSTRUCTION OF THE SITE.
D. AVOID CREATING DEPRESSIONS WHERE WATER MAY POND.
E. THE CONTRACT SHALL INCLUDE GRADING, BANKING, AND DITCHING, UNLESS OTHERWISE INDICATED.
F. WHEN IMPROVING AN EXISTING ACCESS DRIVE, GRADE THE EXISTING DRIVE TO REMOVE ANY ORGANIC MATTER AND SMOOTH THE SURFACE BEFORE PLACING FILL OR STONE.
G. PLACE FILL OR STONE IN SIX (6) INCH MAXIMUM LIFTS, AND COMPACT BEFORE PLACING NEXT LIFT.
H. THE TOP SURFACE COURSE, SHALL EXTEND A MINIMUM OF ONE (1) FOOT BEYOND THE SITE FENCE (UNLESS OTHERWISE NOTED) AND SHALL COVER THE AREA AS INDICATED.
I. APPLY RIPRAP TO THE SIDE SLOPES OF ALL FENCED SITE AREAS, PARKING AREAS, AND ALL OTHER SLOPES GREATER THAN 2:1.
J. APPLY RIPRAP TO THE SIDES OF DITCHES OR DRAINAGE SWALES.
K. RIPRAP ENTIRE DITCH FOR SIX (6) FEET IN ALL DIRECTIONS AT CULVERT OPENINGS.
L. APPLY SEED, FERTILIZER, AND STRAW COVER TO ALL OTHER DISTURBED AREAS, DITCHES, AND DRAINAGE SWALES, NOT OTHERWISE RIPRAPPED.
M. UNDER NO CIRCUMSTANCES WILL DITCHES, SWALES, OR CULVERTS BE PLACED SO THAT THEY DIRECT WATER TOWARDS, OR PERMIT STANDING WATER IMMEDIATELY ADJACENT TO SHELTER OR EQUIPMENT. IF DESIGNS OR ELEVATIONS ARE IN CONFLICT WITH THIS, ADVISE CONSTRUCTION MANAGER IMMEDIATELY.
N. IN DITCHES WITH SLOPES GREATER THAN 10%, MOUND DIVERSIONARY HEADWALLS IN THE DITCH AT CULVERT ENTRANCES. POSITION THE HEADWALL AT AN ANGLE NO GREATER THAT 60 DEGREES OFF THE DITCH LINE. RIPRAP THE UPSTREAM SIDE OF THE HEADWALL AS WELL AS THE DITCH FOR SIX (6) FEET ABOVE THE CULVERT ENTRANCE.
O. APPLY SEED AND FERTILIZER TO SURFACE CONDITIONS WHICH WILL ENCOURAGE ROOTING. RAKE AREAS TO BE SEEDED TO EVEN THE SURFACE AND LOOSEN THE SOIL.
P. SOW SEED IN TWO DIRECTIONS IN TW.U.C.E THE QUANTITY RECOMMENDED BY THE SEED PRODUCER.

THE INFORMATION CONTAINED IN THIS SET OF CONSTRUCTION DOCUMENTS IS PROPRIETARY BY NATURE. ANY USE OR DISCLOSURE OTHER THAN THAT WHICH RELATES TO CARRIER SERVICES IS STRICTLY PROHIBITED.

AT&T
930 NATIONAL PARKWAY
SCHAUMBURG, IL 60173

NEXIUS
DANIEL KALINA
SITE ACQUISITION SPECIALIST
PHONE: 630-946-7741
DANIEL.KALINA@NEXIUS.COM

WESTCHESTER SERVICES LLC
604 FOX GLEN
BARRINGTON, IL 60010
PHONE: 847–277–0070
AE@Westchesterservices.com

JOHN M. BANKS
ARCHITECT
604 FOX GLEN
BARRINGTON, IL 60010
TELEPHONE: 847–277–0070
FAX : 847–277–0080
jbanks@westchesterservices.com

NSB
15515920/IL4218
ILL04218
525 VILLAGE CENTER DRIVE
BURR RIDGE, IL 60527

REVISIONS

REV.	DATE	DESCRIPTION	INITIALS
0	07/05/22	PERMIT/CONSTRUCTION	CG
A	06/09/22	PRELIMINARY CD	DS

NOT FOR CONSTRUCTION UNLESS LABELED AS CONSTRUCTION SET

07/05/22

STATE OF ILLINOIS
JOHN M. BANKS
001-014586
LICENSED ARCHITECT

EXP. DATE: 11/30/22

"I HEREBY CERTIFY THAT THESE PLANS WERE PREPARED BY ME OR UNDER MY DIRECT SUPERVISION AND THAT I AM A DULY REGISTERED ARCHITECT UNDER THE LAWS OF THE STATE OF ILLINOIS"

SHEET TITLE
NOTES & SPECIFICATIONS

SHEET NUMBER
SP1

Q. ENSURE GROWTH OF SEEDED AND LANDSCAPED AREAS, BY WATERING, UP TO THE POINT OF RELEASE FROM THE CONTRACT. CONTINUE TO REWORK THE BARE AREAS UNTIL COMPLETE COVERAGE IS OBTAINED.

4. FIELD QUALITY CONTROL

COMPACT SOILS TO MAXIMUM DENSITY IN ACCORDANCE WITH ASTM D-1557. AREAS OF SETTLEMENT WILL BE EXCAVATED AND REFILLED AT CONTRACTOR'S EXPENSE. INDICATE PERCENTAGE OF COMPACTION ACHIEVED ON AS-BUILT DRAWINGS.

5. PROTECTION

A. PROTECT SEEDED AREAS FROM EROSION BY SPREADING STRAW TO A UNIFORM LOOSE DEPTH OF 1-2 INCHES, STAKE AND TIE DOWN AS REQUIRED. USE OF EROSION CONTROL MESH OR MULCH NET WILL BE AN ACCEPTABLE ALTERNATE.
B. ALL TREES PLACED IN CONJUNCTION WITH A LANDSCAPE CONTRACT WILL BE WRAPPED, TIED WITH HOSE PROTECTED WIRE, AND SECURED TO 2" X 2" X 4'-0" WOODEN STAKES EXTENDING TWO-FEET INTO THE GROUND ON FOUR SIDES OF THE TREE.
C. PROTECT ALL EXPOSED AREAS AGAINST WASHOUTS AND SOIL EROSION. PLACE STRAW BALES AT THE INLET APPROACH TO ALL NEW OR EXISTING CULVERTS. WHERE THE SITE OR ROAD AREAS HAVE BEEN ELEVATED IMMEDIATELY ADJACENT TO THE RAIL LINE, STAKE EROSION CONTROL FABRIC FULL LENGTH IN THE SWALE TO PREVENT CONTAMINATION OF THE RAIL BALLAST. ALL EROSION CONTROL METHODS SHALL CONFORM TO APPLICABLE BUILDING CODE REQUIREMENTS.

TRENCHING:

MATERIALS SUB-CONTRACTOR SHALL:

1. FILL MATERIAL SHALL BE OBTAINED TO THE MAXIMUM EXTENT POSSIBLE FROM EXCAVATIONS ON SITE. THE STRUCTURAL FILL SHOULD BE SAND AND SHALL BE APPROVED BY THE CONSTRUCTION MANAGER AND SHALL CONFORM TO LOCAL GOVERNING JURISDICTION AND UTILITY COMPANY REQUIREMENTS. THE FILL MATERIAL SHALL CONTAIN NO ORGANIC MATERIAL, ROCKS, OR OBJECTIONABLE MATERIALS AND/OR MATERIALS DESIGNATED AS HAZARDOUS OR INDUSTRIAL BY THE EPA. THE FILL MATERIAL SHALL CONTAIN FINES SUFFICIENT TO FILL ALL VOIDS IN THE MATERIAL. BACKFILL OR BORROW SOIL SHALL BE PLACED IN 6" LOOSE LIFTS.

PIPE DETECTION AND IDENTIFICATION SUB-CONTRACTOR SHALL:

1. UTILIZE WARNING TAPE. ALL UTILITY SERVICE TRENCHES SHALL BE MARKED WITH WARNING TAPE.

TRENCH EXCAVATION SUB-CONTRACTOR SHALL:

1. DIG TRENCH TO LINES AND GRADES SHOWN ON THE PLANS OR AS DIRECTED BY THE CONSTRUCTION MANAGER.
2. TRENCH LENGTH SHALL BE SUFFICIENT TO ALLOW FOR SATISFACTORY CONSTRUCTION AND INSPECTION OF THE PROJECT WITHOUT ENDANGERING OTHER CONSTRUCTION WORK OR ADJACENT FACILITIES.
3. DISPOSAL OF EXCESS AND UNSUITABLE EXCAVATION MATERIAL PROPERLY AS DIRECTED BY THE CONSTRUCTION MANAGER.
4. USE HAND TRENCHING METHODS FOR EXCAVATION THAT CANNOT BE ACCOMPLISHED WITHOUT ENDANGERING EXISTING OR NEW STRUCTURES AND OTHER FACILITIES.

TRENCH PROTECTION SUB-CONTRACTOR SHALL:

1. PROVIDE MATERIALS, LABOR, AND EQUIPMENT NECESSARY TO PROTECT TRENCHES AT ALL TIMES.
2. SHEETING AND BRACING TO MEET OR EXCEED OSHA REQUIREMENTS.

BACKFILLING SUB-CONTRACTOR SHALL:

1. NOTIFY THE CONSTRUCTION MANAGER AT LEAST 24 HOURS IN ADVANCE OF BACKFILLING.
2. BACKFILL TRENCH WITH LIFTS UP TO 6" LOOSE MEASURE.
3. PROTECT CONDUIT FROM LATERAL MOVEMENT AND DAMAGE FROM IMPACT OR UNBALANCED LOADING TO AVOID DISPLACEMENT OF CONDUIT AND/OR STRUCTURES. DO NOT FREE FALL BACKFILL INTO TRENCH UNTIL AT LEAST 6" OF COVER IS OVER CONDUIT.

COMPACTION SUB-CONTRACTOR SHALL:

1. COMPACT BACKFILL TO 95% MAXIMUM DRY DENSITY AS DETERMINED BY ASTM D-1557 WITH PLUS OR MINUS 3% OF OPTIMUM MOISTURE CONTENT.
2. IF REQUIRED COMPACTION DENSITY HAS NOT BEEN OBTAINED REMOVE THE BACKFILL FROM THE TRENCH OR STRUCTURE, REPLACE WITH APPROVED BACKFILL AND RE-COMPACT AS SPECIFIED.

3. ANY SUBSEQUENT SETTLEMENT OF TRENCH OR STRUCTURE BACKFILL DURING THE MAINTENANCE PERIOD SHALL BE CONSIDERED THE RESULT OF IMPROPER COMPACTION AND SHALL PROMPTLY CORRECTED.

FENCING AND GATE(S)

PART 1 – GENERAL

1. WORK INCLUDED SEE PLAN FOR SITE AND LOCATION OF FENCE AND GATE(S).
2. QUALITY ASSURANCE ALL STEEL MATERIALS UTILIZED IN CONJUNCTION WITH THIS SPECIFICATION WILL BE GALVANIZED OR STAINLESS STEEL. WEIGHT OF ZINC COATING ON THE FABRIC SHALL NOT BE LESS THAN 12 OUNCES PER SQUARE FOOT OF MATERIAL COVERED. POSTS SHALL BE HOT-DIPPED IN GRADE 'E' ZINC, 18 OUNCES PER SQUARE FOOT.
3. SEQUENCING IF THE SITE AREA HAS BEEN BROUGHT UP TO SURFACE COURSE ELEVATION (PRIOR TO THE FENCE CONSTRUCTION), FENCE POST EXCAVATION SPOILS MUST BE CONTROLLED TO PRECLUDE CONTAMINATION OF SAID SURFACE COURSE.
4.SUBMITTALS
A. MANUFACTURER'S DESCRIPTIVE LITERATURE.
B. CERTIFICATE OR STATEMENT OF COMPLIANCE WITH THE SPECIFICATIONS.

PART 2 – PRODUCTS

1. FENCE MATERIAL
A. ALL FABRIC WIRE, RAILS, HARDWARE, AND OTHER STEEL MATERIALS SHALL BE HOT-DIPPED GALVANIZED.
B. FABRIC SHALL BE SIX-FOOT HIGH TWO-INCH CHAIN LINK MESH OF NO. 9 GAUGE (0.148") WIRE. THE FABRIC SHALL HAVE A KNUCKLED FINISH FOR THE TOP SELVAGES. FABRIC SHALL CONFORM TO THE SPECIFICATIONS OF ASTM A-392 CLASS 1.
C. BARBED WIRE SHALL BE DOUBLE-STRAND, 12-1/2 GAUGE TWISTED WIRE, WITH 14-GAUGE, 4-POINT ROUND BARBS SPACED ON FIVE-INCH CENTERS.
D. ALL POSTS SHALL BE SCHEDULE – 40 MECHANICAL SERVICE PIPE AND SHALL BE TYPE 1 ASTM A-128 AND OF THE FOLLOWING DIAMETER POST 2" SCHEDULE 40 (2 3/8" O.D.) CORNER 3" SCHEDULE 40 (3 1/2" O.D.) GATE 3" SCHEDULE 40 (3 1/2" O.D.)
E. GATE POSTS SHALL BE EXTENDED 12 INCHES, INCLUDING DOME CAP, TO PROVIDE FOR ATTACHMENT OF BARBED WIRE.
F. ALL TOP AND BRACE RAILS SHALL BE $1\frac{1}{2}$" DIAMETER SCHEDULE – 40 MECHANICAL-SERVICE PIPE.
G. GATE FRAMES AND BRACES SHALL BE 1.90 INCH DIAMETER SCHEDULE 40 MECHANICAL-SERVICE PIPE. FRAMES SHALL HAVE WELDED CORNERS.
H. GATE FRAMES SHALL HAVE A FULL-HEIGHT VERTICAL BRACE, AND A FULL-WIDTH HORIZONTAL BRACE, SECURED IN PLACE BY USE OF GATE BRACE CLAMPS.
I. GATE HINGES SHALL BE MERCHANTS METAL MODEL 64386 HINGE ADAPTER WITH MODEL 6409, 188-DEGREE ATTACHMENT.
J. THE GUIDE (LATCH ASSEMBLY) SHALL BE HEAVY INDUSTRIAL DOUBLE GATE LATCH. SEE DETAIL.
K. LATCHES AND STOPS SHALL BE PROVIDED FOR ALL GATES.
L. PLUNGER ROD COMPLETE WITH RECEPTOR TO BE PROVIDED AT THE INACTIVE LEAF OF ALL DOUBLE GATE INSTALLATIONS.
M. ALL STOPS SHALL HAVE KEEPERS CAPABLE OF HOLDING THE GATE LEAF IN THE OPEN POSITION
N. A NO. 7 GAUGE ZINC COATED TENSION WIRE SHALL BE USED AT THE BOTTOM OF THE FABRIC, TERMINATED WITH BAND CLIPS AT CORNER AND GATE POSTS. ATOP EACH LINE/CORNER POST.
O. A SIX-INCH BY 1/2-INCH DIAMETER EYEBOLT TO HOLD TENSION WIRE SHALL BE PLACED AT LINE POSTS.
P. STRETCHER BARS SHALL BE 3/16-INCH BY 3/4-INCH OR HAVE EQUIVALENT CROSS-SECTIONAL AREA.
Q. ALL CORNER GATE AND PANELS SHALL HAVE A 3/8-INCH TRUSS ROD WITH TURNBUCKLES.
R. ALL POSTS EXCEPT GATE POSTS SHALL HAVE A COMBINATION CAP AND BARBED WIRE SUPPORTING ARM. GATE POSTS SHALL HAVE A DOME CAP.
S. OTHER HARDWARE INCLUDES BUT MAY NOT BE LIMITED TO TIE CLIPS, BAND CLIPS AND TENSION BAND CLIPS.
T. BARBED WIRE GATE GUARDS SHALL BE FITTED WITH DOME CAPS.
U. BARBED WIRE SUPPORT ARMS SHALL BE PRESSED STEEL COMPLETE WITH SET BOLT AND LOCK WIRE IN THE ARM.
V. ALL CAPS SHALL BE MALLEABLE IRON, DOME OR ACORN SHAPED AS REQUIRED BY PIPE SIZE.
W. WHERE THE USE OF CONCERTINA HAS BEEN SPECIFIED, 24-INCH DIAMETERS COIL. BARBED TAPE, STAINLESS STEEL, CYCLONE FENCE MODEL G8P TO TYPE III SHALL BE FURNISHED. IT SHALL BE SUPPORTED ABOVE THE TOP RAIL BY USE OF SIX(6) WIRE BARBED WIRE ARMS POSITIONED ATOP EACH LINE/CORNER POST.

PART 3 – EXECUTION

1. INSPECTION

TO CONFIRM PROPER DEPTH AND DIAMETER OF POST HOLE EXCAVATIONS. ALL POST HOLES WILL BE EXCAVATED AS PER CONSTRUCTION DOCUMENTS.

2. INSTALLATION

A. FOUNDATIONS SHALL HAVE A MINIMUM SIX (6) INCH CONCRETE COVER UNDER POST.
B. ALL FENCE POSTS SHALL BE VERTICALLY PLUMB ; ONE QUARTER (1/4) INCH
C. AT CORNER POSTS, GATE POSTS, AND SIDES OF GATE FRAME, FABRIC SHALL BE ATTACHED WITH STRETCHER AND TENSION BAND-CLIPS AT FIFTEEN(15) INCH INTERVALS.
D. AT LINE POSTS, FABRIC SHALL BE ATTACHED WITH BAND-CLIPS AT FIFTEEN (15) INCH INTERVALS.
E. FABRIC SHALL BE ATTACHED TO BRACE RAILS, TENSION WIRE AND TRUSS RODS WITH TIE-CLIPS AT TWO (2) FOOT INTERVALS.
F. A MAXIMUM GAP OF ONE INCH WILL BE PERMITTED BETWEEN TIE CHAIN LINE FABRIC AND THE FINAL GRADE.
G. GATE SHALL BE INSTALLED SO LOCKS ARE ACCESSIBLE FROM BOTH SIDES.
H. GATE HINGE BOLTS SHALL HAVE THEIR THREADS PEENED OR WELDED TO PREVENT UNAUTHORIZED REMOVAL.
I. CONCRETE TO BE A MINIMUM OF 3,000 PSI.

3. PROTECTION

UPON COMPLETION OF ERECTION, INSPECT FENCE MATERIAL AND PAINT FIELD CUTS OR GALVANIZING BREAKS WITH ZINC-BASED PAINT, COLOR TO MATCH THE GALVANIZED METAL.

APPLICABLE STANDARDS

ASTM-A120	SPECIFICATION FOR PIPE, STEEL BLACK AND HOT-DIPPED ZINC COATED (GALVANIZED) WELDED AND SEAMLESS, FOR ORDINARY USES.
ASTM-A123	ZINC (HOT-DIP GALVANIZED) COATING ON IRON AND STEEL PRODUCTS.
ASTM-A153	STANDARD SPECIFICATION FOR ZINC COATING (HOT-DIP) ON IRON AND STEEL HARDWARE.
ASTM-A392	SPECIFICATION FOR ZINC-COATED STEEL CHAIN LINK FENCE
FABRIC. ASTM-A491	SPECIFICATION FOR ALUMINUM-COATED STEEL CHAIN LINK FENCE
FABRIC ASTM-A525	STANDARD SPECIFICATION FOR STEEL SHEET ZINC COATED (GALVANIZED) BY THE HOT-DIPPED PROCESS.
ASTM-A570	SPECIFICATION FOR HOT-ROLLED CARBON STEEL SHEET AND STRIP. STRUCTURAL QUALITY.
ASTM-A535	SPECIFICATION FOR ALUMINUM COATED STEEL BARBED WIRE.

FEDERAL SPECIFICATION RR-F-191- FENCING, WIRE AND POST METAL (AND GATES, CHAIN LINK FENCE FABRIC, AND ACCESSORIES)

METALS

PART 1 – GENERAL

SECTION INCLUDES:

1. STRUCTURAL STEEL FRAMING MEMBERS, BASE PLATES, PLATES, BARS, THREADED STRUCTURAL FASTENERS, ANTENNA SUPPORT ASSEMBLIES, GRATING, STEEL PLATFORMS AND PEDESTAL SUPPORTS, AND GROUTING UNDER BASE PLATES.

QUALITY ASSURANCE

1. FABRICATE STRUCTURAL STEEL MEMBERS IN ACCORDANCE WITH AISC SPECIFICATIONS FOR THE DESIGN, FABRICATION AND ERECTION OF STRUCTURAL STEEL FOR BUILDINGS.
2. PERFORM DESIGN UNDER DIRECT SUPERVISION OF A PROFESSIONAL STRUCTURAL ENGINEER LICENSED IN THE STATE.

PART 2 – PRODUCTS

1. MATERIALS:

A. STRUCTURAL STEEL MEMBERS:	ASTM A572, GRADE 50
B. STRUCTURAL TUBING:	ASTM A500, GRADE B
C. PIPE:	ASTM A53, TYPE E OR S, GRADE B
D. BOLTS, NUTS, AND WASHERS:	ASTM A325
E. ANCHOR BOLTS:	ASTM A307
F. WELDING MATERIALS:	AWS D1.1, TYPE REQUIRED FOR MATERIALS BEING WELDED

THE INFORMATION CONTAINED IN THIS SET OF CONSTRUCTION DOCUMENTS IS PROPRIETARY BY NATURE. ANY USE OR DISCLOSURE OTHER THAN THAT WHICH RELATES TO CARRIER SERVICES IS STRICTLY PROHIBITED.

AT&T
930 NATIONAL PARKWAY
SCHAUMBURG, IL 60173

NEXIUS
DANIEL KALINA
SITE ACQUISITION SPECIALIST
PHONE: 630-946-7741
DANIEL.KALINA@NEXIUS.COM

WESTCHESTER SERVICES LLC
604 FOX GLEN
BARRINGTON, IL 60010
PHONE: 847-277-0070
AE@Westchesterservices.com

JOHN M. BANKS
ARCHITECT
604 FOX GLEN
BARRINGTON, IL 60010
TELEPHONE: 847-277-0070
FAX : 847-277-0080
jbanks@westchesterservices.com

NSB
15515920/IL4218
ILL04218
525 VILLAGE CENTER DRIVE
BURR RIDGE, IL 60527

REVISIONS

REV.	DATE	DESCRIPTION	INITIALS
0	07/05/22	PERMIT/CONSTRUCTION	CG
A	06/09/22	PRELIMINARY CD	DS

NOT FOR CONSTRUCTION UNLESS LABELED AS CONSTRUCTION SET

07/05/22
STATE OF ILLINOIS
JOHN M. BANKS
001-014586
EXP. DATE 11/30/22
"I HEREBY CERTIFY THAT THESE PLANS WERE PREPARED BY ME OR UNDER MY DIRECT SUPERVISION AND THAT I AM A DULY REGISTERED ARCHITECT UNDER THE LAWS OF THE STATE OF ILLINOIS"

SHEET TITLE
NOTES & SPECIFICATIONS

SHEET NUMBER
SP2

THE INFORMATION CONTAINED IN THIS SET OF CONSTRUCTION DOCUMENTS IS PROPRIETARY BY NATURE. ANY USE OR DISCLOSURE OTHER THAN THAT WHICH RELATES TO CARRIER SERVICES IS STRICTLY PROHIBITED.

METALS CONTINUED

G. GROUT: NON-SHRINK TYPE, PREMIXED COMPOUND CONSISTING OF NONMETALLIC AGGREGATE, CEMENT, WATER REDUCING AND PLASTICIER ADDITIVES, CAPABLE OF DEVELOPING A MINIMUM COMPRESSIVE STRENGTH OF 7000 psi AT 28 DAYS.

H. SHOP AND TOUCH-UP PRIMER: SSPC 15, TYPE 1, RED OXIDE

I. TOUCH-UP PRIMER FOR GALV. SURFACES: ZINC RICH TYPE

2. FABRICATION: CONTINUOUSLY SEAL JOINTED MEMBERS BY CONTINUOUS WELDS. GRIND EXPOSED WELDS SMOOTH.

3. FINISH:

A. PREPARE STRUCTURAL COMPONENT SURFACES IN ACCORDANCE WITH SSPC SP-1 TO SP-10 PROCEDURES.
B. STRUCTURAL STEEL MEMBERS SHALL BE HOT DIPPED GALVANIZED.

PART 3 - EXECUTION

EXAMINATION AND PREPARATION:

1. VERIFY THAT THE FIELD CONDITIONS ARE ACCEPTABLE TO PERFORM THE WORK.

ERECTION:

1. ALLOW FOR ERECTION LOADS. PROVIDE TEMPORARY BRACING TO MAINTAIN FRAMING IN ALIGNMENT UNTIL COMPLETION OF ERECTION AND INSTALLATION OF PERMANENT BRIDGING AND BRACING.
2. NO UNAUTHORIZED WELDING SHALL BE PERFORMED ON CROWN CASTLE USA, INC TOWERS. ALL OTHER WELDING SHALL BE IN ACCORDANCE WITH AMERICAN WELDING SOCIETY AWS 01.1 STRUCTURAL STEEL WELDING CODE-STEEL WELD ELECTRODES SHALL BE E70XX.
3. DO NOT FIELD CUT OR ALTER STRUCTURAL MEMBERS WITHOUT APPROVAL OF THE ARCHITECT/ENGINEER.
4. AFTER ERECTION, TOUCH-UP WELDS, ABRASIONS, AND SURFACES NOT SHOP PRIMED OR GALVANIZED WITH ZINC RICH PAINT (ALL EXISTING AND NEW AREAS).

FIELD QUALITY CONTROL:

1. FIELD INSPECTION OF MEMBERS, CONNECTIONS, WELDS AND BOLT / NUT TORQUE .

CONCRETE:

PART 1 - GENERAL

1. WORK INCLUDES FORMWORK, REINFORCEMENT, ACCESSORIES, CAST-IN-PLACE CONCRETE, FINISHING, AND CURING.

2. INSPECTIONS

A. CONTRACTOR IS RESPONSIBLE FOR SCHEDULING BUILDING DEPARTMENT INSPECTIONS REQUIRED FOR THE SCOPE OF WORK BEING PERFORMED.

B. ALL REINFORCING STEEL SHALL BE INSPECTED AND APPROVED BY THE AT&TWIRELESS CONSTRUCTION MANAGER PRIOR TO PLACEMENT OF CONCRETE.

C. THE AT&TWIRELESS CONSTRUCTION MANAGER SHALL BE NOTIFIED NO LESS THAN 48 HOURS IN ADVANCE OF CONCRETE POURS.

3. QUALITY ASSURANCE

A. CONSTRUCT AND ERECT CONCRETE FORM WORK IN ACCORDANCE WITH ACI 301 AND ACI 318.

B. PERFORM CONCRETE REINFORCING WORK IN ACCORDANCE WITH ACI 301, ACI 318, AND ASTM A184.

C. PERFORM CAST-IN-PLACE CONCRETE WORK IN ACCORDANCE WITH ACI 301, ACI 318, AND ACI 117-90.

4. SUBMITTALS

SUBMIT CONCRETE MIX DESIGN AND REINFORCING STEEL SHOP DRAWINGS FOR APPROVAL BY AT&TWIRELESS CONSTRUCTION MANAGER/ENGINEER. THE SHOP DRAWINGS SHALL BE SUBMITTED IN EH FORM OF TWO (2) CONCRETE MIX DESIGN INFORMATION SHEETS AND TWO (2) BLUELINE DRAWINGS FOR REINFORCING STEEL.

PART 2 - PRODUCTS

1. REINFORCEMENT MATERIALS

A. REINFORCEMENT STEEL, ASTM A615, 60KSI YIELD GRADE, REINFORCING STEEL RODS, PLAIN FINISH.

B. WELDED STEEL WIRE FABRIC ASTM A185 PLAIN TYPE, IN FLAT SHEETS, PLAIN FINISH.

C. CHAIRS, BOLSTERS, BAR SUPPORTS, SPACERS, SIZED AND SHAPED FOR SUPPORTS OF REINFORCING.

D. FABRICATE CONCRETE REINFORCING IN ACCORDANCE WITH ACI 315, AND ACI 318, AND ASTM A184.

2. CONCRETE MATERIALS

A. CEMENT: ASTM C150, PORTLAND TYPE.

B. FINE AND COURSE AGGREGATES: ASTM C33 - MAXIMUM SIZE OF CONCRETE AGGREGATE SHALL NOT EXCEED ONE (1) INCH SIZE SUTABLE FOR INSTALLATION METHOS UTILIZED FOR ONE-THIRD CLEAR DISTANCE BEHIND OR BETWEEN REINFORCING.

C. WATER: CLEAN AND NOT DETRIMENTAL TO CONCRETE.

D. AIR ENTRAINING ADMIZTURE: ASTM C260.

E. BONDING AGENT: LATEX EMULSION FOR BONDING NEW TO OLD CONCRETE AS MANUFACTURED BY DAYTON SUPERIOR.

F. NON-SHRINK GROUT: PREMIXED COMPOUND CONSISTING OF NONMETALLIC AGGREGATE, CEMENT, WATER REDUCING AND PLASTICISING AGENTS.

3. CONCRETE MIX

A. CONCRETE MATERIALS SHALL CONFORM TO THE APPROPRIATE A.C.I. REQUIREMENTS FOR EXPOSED STRUCTURAL CONCRETE.

B. MIX AND DELIVER CONCRETE IN ACCORDANCE WITH ASTM C94, ALT, 3.

C. PROPORTIONS OF CONCRETE MATERIALS SHALL BE SUITABLE FOR THE INSTALLATION METHOD UTILIZED AND SHALL RESULT IN DURABLE CONCRETE FOR LOCAL ANTICIPATED AGGRESSIVE ACTIONS. THE DURABILITY REQUIREMENTS OF ACI 318 CHAPTER F4 SHALL BE SATASFIED BASED ON THE CONDITIONS EXPECTED AT THE SITE. PROVIDE CONCRETE AS FOLLOWS:
   1. COMPRESSIVE STRENGTH 4000 PSI AT 28 DAYS.
   2. SLUMP : 3 INCHES.

EXECUTION:

1. INSERTS, EMBEDDED COMPONENTS AND OPENINGS

A. THE CONTRACTOR SHALL COORDINATE AND CROSS CHECK ARCHITECTURAL, BUILDING AND ELECTRICAL DRAWINGS FOR OPENINGS, SLEEVES, ANCHORS, HANGERS, AND OTHER ITEMS RELATED TO CONCRETE WORK AND SHALL ASSUME FULL RESPONSIBILITY FOR THE PROPER LOCATION BEFORE PLACING CONCRETE.

B. PROVIDE FORMED OPENINGS WHERE REQUIRED FOR WORK TO BE EMBEDED IN AND PASSING THROUGH CONCRETE MEMBERS.

C. COORDINATE WORK OF OTHER SECTIONS IN FORMING AND SETTING OPENINGS, SLOTS, RECESSES, CHASES, SLEEVES, BOLTS, ANCHORS, AND OTHER INSERTS.

D. INSTALL CONCRETE ACCESSORIES STRAIGHT, LEVEL ND PLUMB.

2. REINFORCEMENT PLACEMENT

A. PLACE REINFORCEMENT, SUPPORTED AND SECURED AGAINST DISPLACEMENT.

B. ENSURE REINFORCING IS CLEAN, FREE OF LOOSE SCALE, DIRT, OR OTHER FOREIGN COATINGS.

C. WELDING IS PROHIBITED ON REINFORCING STEEL AND EMBEDMENTS.

D. MINIMUM CONCRETE COVER FOR REINFORCING SHALL BE 3 INCHES UNLESS NOTED OTHERWISE.

E. CONCRETE COVER FROM TOP OF FOUNDATION TO ENDS OF VERTICAL REINFORCEMENT SHALL NOT EXCEED 3 INCHES OR BE LESS THAN 2 INCHES.

3. PLACING CONCRETE

A. VIBRATE ALL CONCRETE.

B. ALL CONCRETE WORK SHALL ADHERE TO THE LATEST A.C.I. STANDARDS FOR WINTER POURING AND CURING PROCEDURES IF SEASONAL CONDITIONS APPLY.

4. CURING

A. AFTER PLACEMENT, PROTECT CONCRETE FROM PREMATURE DRYING.

B. MAINTAIN CONCRETE WITH MINIMAL MOISTURE LOSS AT RELATIVELY CONSISTENT TEMPERATURE FOR A PERIOD NECESSARY FOR HYDRATION OF CEMENT AND HARDENING OF CONCRETE.

5. PROVIDE HAND RUBBED SMOOTH FINISH TO ALL EXPOSED VERTIACAL FORMED CONCRETE SURFACES.

6. FIELD QUALITY CONTROL

A. SUBMIT THREE (3) CONCRETE TEST CYLINDERS - TAKEN EVERY 15 CUBIC YARDS OR LESS. SUBMIT CONCRETE TESTS TO THE PROJECT MANAGER IN ACCORDANCE TO ASTM C-31 AND C-39.

B. SUBMIT ONE (1) ADDITIONAL TEST CYLINDER - TAKEN DURING COLD WEATHER POURS, AND CURED ON JOB SITE UNDER THE SAME CONDITIONS AS THE CONCRETE IT REPRESENTS.

C. SUBMIT ONE (1) SLUMP TEST - TAKEN FOR EACH SET OF TEST CYLINDERS TAKEN.

7. DEFECTIVE CONCRETE

MODIFY OR REPLACE CONCRETE NOT CONFORMING TO REQUIRED SPECIFICATIONS, DETAILS OR ELEVATIONS AS DIRECTED BY THE AT&TWIRELESS CONSTRUCTION MANAGER.

GENERAL ELECTRICAL NOTES:

1. ALL ELECTRICAL MATERIALS, EQUIPMENT AND INSTALLATION PROCEDURES TO CONFORM WITH AT&TWIRELESS SPECIFICATIONS.
2. CONTRACTOR SHALL PERFORM ALL VERIFICATION TESTS AND EXAMINATION WORK PRIOR TO THE ORDERING OF THE ELECTRICAL EQUIPMENT AND THE ACTUAL CONSTRUCTION. CONTRACTOR SHALL ISSUE A WRITTEN NOTICE OF ALL FINDINGS TO THE ENGINEER LISTING ALL MALFUNCTIONS, FAULTY EQUIPMENT AND DISCREPANCIES.
3. ALL MATERIALS SHALL BE MANUFACTURED IN ACCORDANCE WITH APPLICABLE STANDARDS ESTABLISHED BY ANSI, NEMA, NFPA, AND 'UL' LISTED.
4. THE ENTIRE ELECTRICAL INSTALLATION SHALL BE GROUNDED AS REQUIRED PER THE NEC, AND ALL APPLICABLE LOCAL CODES.
5. ALL CIRCUIT BREAKERS, FUSES AND ELECTRICAL EQUIPMENT SHALL HAVE A MINIMUM INTERRUPTING RATING OF 42,000 AIC.
6. FOR COMPLETE INTERNAL WIRING AND ARRANGEMENT REFER TO VENDOR PRINTS PROVIDED BY AT&TWIRELESS FOR BTS CABINET.
7. PATCH, REPAIR, AND PAINT ANY AREA THAT HAS BEEN DAMAGED IN THE COURSE OF THE ELECTRICAL WORK.
8. PROVIDE AT&TWIRELESS WITH ONE SET OF COMPLETE ELECTRICAL 'AS-BUILT' DRAWINGS AT THE COMPLETION OF THE JOB SHOWING ACTUAL ROUTINGS AND WIRING CONNECTIONS.
9. ALL SINGLE-PHASE SELF CONTAINED METER CONNECTION DEVICES MUST INCLUDE HORN TYPE BY-PASS PROVISION SO THAT SERVICES WILL NOT BE INTERRUPTED WHEN A METER IS REMOVED FROM THE SOCKET.
10. ALL EQUIPMENT PUNCH OUTS AND CONDUITS (USED AND SPARE) TO BE RODENT PROOFED WITH CAPS, STEEL MESH, AND/OR FOAM FILL BY CONTRACTOR AS NEEDED.
11. NO SPOILS TO BE LEFT ON SITE WITHOUT THE WRITTEN CONSENT OF THE LANDOWNER.
12. CONTRACTOR TO PROVIDE 2 PHENOLIC LABELS AT METER ONE TO IDENTIFY 'AT&TWIRELESS DISCONNECT' AND THE OTHER TO GIVE THE SITE ADDRESS.
13. ALL CONTRACTOR FURNISHED MATERIALS AND EQUIPMENT SPECIFIED ON THE PROJECT SHALL BE NEW AND UNUSED, OF CURRENT MANUFACTURE AND OF THE HIGHEST GRADE.

AT&T
930 NATIONAL PARKWAY
SCHAUMBURG, IL 60173

NEXIUS
DANIEL KALINA
SITE ACQUISITION SPECIALIST
PHONE: 630-946-7741
DANIEL.KALINA@NEXIUS.COM

WESTCHESTER SERVICES LLC
604 FOX GLEN
BARRINGTON, IL 60010
PHONE: 847-277-0070
AE@Westchesterservices.com

JOHN M. BANKS
ARCHITECT
604 FOX GLEN
BARRINGTON, IL 60010
TELEPHONE: 847-277-0070
FAX : 847-277-0080
jbanks@westchesterservices.com

NSB
15515920/IL4218
ILL04218
525 VILLAGE CENTER DRIVE
BURR RIDGE, IL 60527

REVISIONS

REV.	DATE	DESCRIPTION	INITIALS
0	07/05/22	PERMIT/CONSTRUCTION	CG
A	06/09/22	PRELIMINARY CD	DS

NOT FOR CONSTRUCTION UNLESS LABELED AS CONSTRUCTION SET

07/05/22

STATE OF ILLINOIS
JOHN M. BANKS
001-014586
LICENSED ARCHITECT

EXP. DATE: 11/30/22

"I HEREBY CERTIFY THAT THESE PLANS WERE PREPARED BY ME OR UNDER MY DIRECT SUPERVISION AND THAT I AM A DULY REGISTERED ARCHITECT UNDER THE LAWS OF THE STATE OF ILLINOIS"

SHEET TITLE
NOTES & SPECIFICATIONS

SHEET NUMBER
SP3

GENERAL ELECTRICAL NOTES (CONTINUED):

14. ALL EQUIPMENT, MATERIAL AND THE INSTALLATION METHODS SPECIFIED ON THE PROJECT DRAWINGS SHALL BE DESIGNED AND FABRICATED IN COMPLIANCE WITH APPLICABLE FEDERAL, STATE, AND LOCAL CODES AND REGULATIONS, AND APPROPRIATE INDUSTRIAL CONSENSUS STANDARDS AND CODES INCLUDING ANSI, IEEE, NEMA, NFPA AND UL, ALL AS REVISED AS OF THE DATE OF THIS WORK PACKAGE.

15. ALL ELECTRICAL ITEMS BOTH CONTRACTOR AND OWNER FURNISHED SHALL BE CHECKED FOR AGREEMENT WITH THE PROJECT DRAWINGS AND SPECIFICATIONS AND SHALL BE VISUALLY INSPECTED TO ENSURE THAT EQUIPMENT IS UNDAMAGED AND IS IN PROPER ALIGNMENT, INSTALLED PER MANUFACTURER'S INSTRUCTIONS, ELECTRICAL CONNECTIONS ARE TIGHT AND PROPERLY INSULATED WHERE REQUIRED, FUSES ARE OF THE PROPER TYPE AND SIZE, AND ELECTRICAL ENCLOSURES ARE OF THE PROPER NEMA TYPE.

16. NOTIFY OWNER IN WRITING OF ALL DISCREPANCIES BETWEEN DRAWINGS / SPECIFICATIONS AND FIELD INSTALLATIONS, OR IF THE VISUAL INSPECTIONS SHOW DAMAGE OR IMPROPER INSTALLATION.

17. THE EQUIPMENT AND MATERIALS SHALL BE FURNISHED AND INSTALLED TO OPERATE SAFELY AND CONTINUOUSLY WITH NO PROTECTION FROM THE WEATHER.

18. ELECTRICAL WORK REPRESENTED ON THE PROJECT DRAWINGS IS SHOWN DIAGRAMMATICALLY. EXACT LOCATIONS AND ELEVATIONS OF ELECTRICAL EQUIPMENT SHALL BE DETERMINED IN THE FIELD AND VERIFIED WITH THE OWNER'S REPRESENTATIVE.

19. CONTRACTOR SHALL COORDINATE THE INSTALLATION OF TEMPORARY, IF REQUIRED, AND PERMANENT POWER WITH THE LOCAL UTILITY COMPANY. THE TEMPORARY POWER AND ALL HOOKUP COSTS ARE TO BE PAID BY THE CONTRACTOR.

20. PROVIDE MOLDED CASE, BOLT ON, THERMAL MAGNETIC TRIP, SINGLE TWO OR THREE POLE CIRCUIT BREAKERS. MULTIPLE POLE CIRCUIT BREAKERS SHALL BE SINGLE HANDLE COMMON TRIP. SHORT CIRCUIT INTERRUPTING RATING SHALL BE AS REQUIRED FOR AVAILABLE FAULT CURRENTS. ALL CIRCUIT BREAKERS, FUSES AND ELECTRICAL EQUIPMENT SHALL HAVE A SHORT CIRCUIT INTERRUPTING RATING EQUAL TO OR GREATER THAN THAT SHOWN ON THE PROJECT DRAWINGS.

21. CONTRACTOR SHALL PERFORM ALL EXCAVATION, TRENCHING, BACKFILLING, AND REMOVAL OF DEBRIS IN CONNECTION WITH THE ELECTRICAL WORK IN ACCORDANCE WITH THE PROJECT DRAWINGS. CONTRACTOR SHALL COORDINATE THE INSTALLATION OF UNDERGROUND UTILITIES AND GROUND WITH THE FOUNDATION INSTALLATION. HAND DIGGING WILL BE REQUIRED IN THE COMPOUND ONLY.

22. CONTRACTOR SHALL PROVIDE ALL NECESSARY SUPPORTS FOR EQUIPMENT INSTALLED AS PART OF THIS PROJECT. SUPPORTS SHALL CONSIST OF GALVANIZED STEEL FRAMES, PLATES, BRACKETS, RACKS AND OTHER SHAPES OF ADEQUATE SIZE AND FASTENED WITH BOLTS, SCREWS OR BY WELDING TO PROVIDE RIGID SUPPORT.

23. CONTRACTOR SHALL CALL THE APPROPRIATE UTILITIES PROTECTION SERVICE BEFORE ANY UNDERGROUND WORK IS PERFORMED, SUCH AS TRENCHING, EXCAVATING, AND DRIVING GROUNDING RODS.

24. ALL ELECTRICAL EQUIPMENT SHALL BE LABELED WITH PERMANENTLY ENGRAVED LAMINATED PHENOLIC NAMEPLATES. (MINIMUM LETTER HEIGHT SHALL BE 1/2") NAMEPLATES SHALL BE FASTENED WITH STAINLESS STEEL SCREWS AND AS PER AT&TWIRELESS SPECIFICATIONS.

GENERAL RACEWAY NOTES:

1. CONDUIT AND CONDUIT FITTINGS SHALL MEET ANSI AND NEC STANDARDS FOR MATERIAL AND WORKMANSHIP AND SHALL BE UL LISTED.

   A. RIGID STEEL CONDUIT SHALL CONFORM TO ANSI C801 AND REQUIREMENTS OF NEC, PARAGRAPH 346 AND BE STANDARD WEIGHT, MILD RIGID STEEL, HOT DIP GALVANIZED WITH INSIDE AND OUTSIDE FINISHED WITH A PROTECTIVE ZINC COATING. COUPLING ELBOWS AND BENDS SHALL MEET THESE SAME REQUIREMENTS. FITTINGS SHALL BE OF THE GALVANIZED IRON OR STEEL THREADED TYPE.

   B. PVC CONDUIT SHALL CONFORM TO UL STANDARD 651–89 AND THE REQUIREMENTS OF NEC, PARAGRAPH 347. CONDUIT SHALL BE HEAVY WALL TYPE, SCHEDULE 40 OR 80, AND SUNLIGHT RESISTANT. FITTINGS SHALL BE OF THE UNTHREADED SOLVENT CEMENT TYPE.

   C. EMT CONDUIT (FOR USE BEHIND WALLS OR ABOVE SUSPENDED CEILINGS ONLY). ELECTRIC METALLIC TUBING SHALL CONFORM TO ANSI C803 AND THE REQUIREMENTS OF NEC, PARAGRAPH 348 AND BE PROTECTED ON EXTERIOR WITH A ZINC COATING AND ON INTERIOR SURFACES WITH EITHER A ZINC COATING OR LACQUER ENAMEL. FITTINGS SHALL BE ZINC COATED STEEL.

2. MINIMUM CONDUIT SIZE SHALL BE 3/4", SIZES NOT SHOWN ON DRAWINGS SHALL BE PER NEC.

3. ALL SPARE CONDUITS SHALL HAVE A METALLIC PULL WIRE.

4. CONDUIT SUPPORTS SHALL BE FURNISHED AND INSTALLED BY THE ELECTRICAL CONTRACTOR AND IN ACCORDANCE WITH THE NEC.

5. UNDERGROUND CONDUITS.

   A. INSTALL A WARNING TAPE TWELVE INCHES ABOVE EACH CONDUIT OR SET OF CONDUITS.

   B. IDENTIFY EACH CONDUIT AT BOTH ENDS. INSTALL MINIMUM OF 3'–0" BELOW THE FINISHED GRADE, OR DEEPER IF NOTED ON PLAN DRAWINGS.

   C. SLOPE A MINIMUM OF 4" PER 100'–0" TO DRAIN AWAY FROM BUILDINGS AND EQUIPMENT.

   D. USE MANUFACTURED ELECTRICAL ELBOWS AND FITTINGS FOR BELOW GRADE BENDS.

   E. MAKE JOINTS AND FITTINGS WATERTIGHT ACCORDING TO MANUFACTURER'S INSTRUCTIONS.

   F. INSTALL A COUPLING BEFORE EACH WALL PENETRATION.

   G. RESTORE SURFACE FEATURES DISTURBED BY EXCAVATION (AND TRENCHING) IN ALL AREAS.

GENERAL CONDUCTOR NOTES:

1. ALL POWER, CONTROL AND COMMUNICATION WIRING SHALL MEET NEMA–WC, ASTM, UL, AND NEC STANDARDS FOR MATERIAL AND WORKMANSHIP UNLESS OTHERWISE SPECIFIED.

   A. SERVICE ENTRANCE CONDUCTORS SHALL BE COPPER, 600 VOLT, SUNLIGHT RESISTANT, SUITABLE FOR WET LOCATIONS, TYPE USE–2. THE GROUNDED NEUTRAL CONDUCTOR SHALL BE IDENTIFIED WITH A WHITE MARKING AT EACH TERMINATION.

   B. CONDUCTORS FOR FEEDER AND BRANCH CIRCUITS SHALL BE COPPER 600 VOLT, TYPE THHN / THWN WITH A MINIMUM SIZE OF #12 AWG.

2. ALL CONDUCTOR ACCESSORIES INCLUDING CONNECTORS, TERMINATIONS, INSULATING MATERIALS, SUPPORT GRIPS, MARKER AND CABLE TIES SHALL BE FURNISHED AND INSTALLED SUPPLIER'S INSTALLATION INSTRUCTIONS SHALL BE OBTAINED FOR CABLE ACCESSORIES. THESE INSTRUCTIONS SHALL BE IN THE POSSESSION OF THE CRAFTSMAN WHILE INSTALLING THE ACCESSORIES AND SHALL BE AVAILABLE TO THE COMPANY FOR REFERENCE.

3. WHERE POSSIBLE, NO. 6 AWG AND SMALLER WIRE SHALL BE COLORED CODED BY THE COLOR OF THE INSULATION COVERING. COLOR CODING OF WIRE LARGER THAN NO. 6 AWG MAY BE BY MEANS OF SELF–ADHESIVE WRAP AROUND TYPE MARKERS, PER NEC.

4. TERMINAL CONNECTOR FOR CONDUCTORS 8 AWG AND LARGER SHALL BE PRESSURE OR BOLTED CLAMP TYPE BURNDY QUIKLUG, VARILUG OR ACCEPTABLE EQUAL: OR COMPRESSION TYPE, BURNDY TYPE YAV OR YA (LONG BARREL), PANDUIT TYPE LCA OR LCC, OR ACCEPTABLE EQUAL. ACCEPTABLE CONNECTORS INCLUDED WITH COMPANY–FURNISHED EQUIPMENT MAY BE USED.

5. TERMINATION PROVISIONS OF EQUIPMENT FOR CIRCUITS RATED 100 AMPERES OR LESS OR MARKED FOR NOS. 14 THROUGH 1 CONDUCTORS, SHALL BE USED ONLY FOR CONDUCTORS RATED 66°C (140°F). CONDUCTORS WITH HIGHER TEMPERATURE RATINGS SHALL BE PERMITTED, PROVIDED THE AMPACITY OR THE CONDUCTOR SIZE USED.

6. TERMINATION PROVISIONS OF EQUIPMENT FOR CIRCUITS RATED OVER 100 AMPERES, OR MARKED FOR CONDUCTORS LARGER THAN NO.1 SHALL BE USED ONLY FOR CONDUCTORS RATED 75°C (167°F) CONDUCTORS WITH HIGHER TEMPERATURE RATINGS SHALL BE PERMITTED, PROVIDED THE AMPACITY OF EACH CONDUCTOR IS DETERMINED BASED UPON THE 75°C (167°F) AMPACITY OF THE CONDUCTOR SIZE USED.

7. ALL 600 VOLT OR LESS WIRING, WHERE COMPRESSION TYPE CONNECTORS ARE USED, SHALL BE INSULATED WITH AT LEAST ONE TURN OF 'SCOTCHFILL' ELECTRICAL INSULATING PUTTY AND THEN COVERED WITH TWO HALF TURNS OF TAPE SIMILAR TO 3M COMPANY'S '33 PLUS (33+) PLASTIC TAPE OR 88 OUTDOOR TAPE.

8. TERMINAL CONNECTORS FOR CONDUCTORS SMALLER THAN 8 AWG SHALL BE COMPRESSION TYPE CONNECTORS SIZED FOR THE CONDUCTOR AND THE TERMINAL. THE CONNECTORS SHALL BE CONSTRUCTED OF FINE GRADE HIGH CONDUCTIVITY COPPER IN ACCORDANCE WITH QQ–C–516 AND SHALL BE TIN–PLATED IN ACCORDANCE WITH MIL–T–10727. THE INTERIOR SURFACE OF THE CONNECTOR WIRE BARREL SHALL BE SERRATED AND THE EXTERIOR SURFACE OF THE CONNECTOR WIRE BARREL SHALE BE PROVIDED WITH CRIMP GUIDES.

GENERAL GROUNDING NOTES:

1. ALL WORK SHALL COMPLY WITH THE LATEST AT&TWIRELESS GROUNDING SPECIFICATIONS AND REQUIREMENTS.

2. ALL METALLIC COMPONENTS ON THE SITE MUST BE GROUNDED TO THE GROUND RING. THIS INCLUDES STEEL CONDUITS USED TO DELIVER THE TELCO AND POWER UTILITY LINES TO THE SITE OR USED TO PROVIDE ACCESS BY UTILITIES OR CONTRACTORS TO THE VARIOUS CABINETS.

3. ALL GROUND LEADS ABOVE GRADE SHALL BE INSTALLED IN 1/2" SEAL TIGHT.

4. WHEN EARTH RESISTANCE TEST INDICATES THAT THE SOIL IS ABOVE MINIMUM ALLOWABLE RESISTANCE, THAN THE CONTRACTOR SHALL ESTIMATE THE TYPE, NUMBER AND ARRANGEMENT OF EARTH ELECTRODES. CONTRACTOR SHALL ALSO CONSIDER COMPANY'S SITE SPECIFIC APPROACHES FOR IMPROVING EARTH RESISTANCE AT THE SITE BY METHODS INDICATED BELOW:

   RAW LAND
   A. USE MULTIPLE RODS
   B. LENGTHEN THE EARTH ELECTRODE
   C. TREAT THE SOIL
   D. USE CHEMICAL RODS

5. THE CONTRACTOR MUST VERIFY THAT NEW GROUNDING SYSTEM RESISTANCE IS EQUAL TO OR LESS THAN FIVE (5) OHMS PER AT&TWIRELESS SPECIFICATIONS.

6. RUN ALL GROUND WIRES IN AN ORGANIZED MANNER, AVOID CROSSING OF WIRES WHEREVER POSSIBLE. DO NOT RUN WIRES OVER CONCRETE SLAB.

7. INSTALL ALL GROUND WIRES IN A DOWNWARD SLOPE FOR MAXIMUM LIGHTNING PROTECTION.

8. MAINTAIN ALL MINIMUM BENDING RADII OF THE GROUNDING WIRES.

9. DO NOT REMOVE MORE INSULATION FROM THE GROUND WIRES THAN NECESSARY WHEN CADWELDING OR CRIMPING IF EXCESS INSULATION IS REMOVED, THE CONNECTION WILL BE CONSIDERED UNACCEPTABLE AND WILL BE CORRECTED PER THE AT&TWIRELESS REPRESENTATIVES'S DIRECTION.

10. DOWN LEAD FOR ANTENNA SECTORS MUST BE CONNECTED DIRECTLY TO THE GROUND RING.

11. ALL BASE TRANSCEIVER SITE EQUIPMENT SHALL BE GROUNDED IN ACCORDANCE WITH THE INTERNATIONAL ELECTRICAL CODE (NEC), AND THE LATEST EDITION OF LIGHTNING PROTECTION CODE NFPA 780 AND AT&TWIRELESS STANDARDS.

12. THE ELECTRICAL SERVICE TO THE SITE SHALL BE GROUNDED AT THE SERVICE DISCONNECTING MEANS REQUIRED IN ARTICLE 250 OF THE NATIONAL ELECTRIC CODE, IN ACCORDANCE WITH ANY LOCAL CODE.

13. ALL UNDERGROUND (BELOW GRADE) GROUNDING CONNECTIONS SHALL BE MADE BY THE CADWELD PROCESS (MECHANICAL LUG ATTACHMENTS BELOW GRADE ARE NOT ACCEPTABLE). CONNECTIONS SHALL INCLUDE ALL CABLE SPLICES (TEES, X'S, ETC.) ALL CABLE CONNECTIONS TO GROUND RODS, GROUND ROD SPLICES, AND LIGHTING PROTECTION SYSTEM AS INDICATED. ALL MATERIALS USED (MOLDS, WELDING METALS, TOOLS, ETC.) SHALL BE BY CADWELD AND INSTALLED PER MANUFACTURERS RECOMMENDATION AND PROCEDURES.

14. ALL GROUNDING AND BONDING CONDUCTORS THAT ARE CONNECTED ABOVE GRADE INTERIOR TO A BUILDING SHALL BE CONNECTED USING TWO HOLE CRIMP TYPE (COMPRESSION) CONNECTORS FOR #2 AND #6 AWG INSULATED COPPER CONDUCTOR.

15. ALL GROUNDING CONNECTIONS, INTERIOR AND EXTERIOR, MADE THROUGHOUT THIS DOCUMENT SHALL BE MADE USING AN ANTI–OXIDATION COMPOUND, THE ANTI–OXIDATION COMPOUND SHALL BE 'THOMAS AND BETTS' KOPR–SHIELD (TIM OF JET LUBE, INC.) THERE IS NO EQUIVALENT FOR THIS PRODUCT: NO OTHER COMPOUND WILL BE ACCEPTED. COAT ALL WIRES BEFORE LUGGING. COAT ALL SURFACES BEFORE CONNECTING.

16. ALL CONNECTIONS SHALL BE MADE TO BARE METAL. ALL PAINTED SURFACES SHALL BE FIELD INSPECTED AND MODIFIED TO ENSURE PROPER CONTACT PRIOR TO CADWELD, GALVANIZING SHALL BE REMOVED BY GRINDING SURFACE TO BARE METAL 'SLAG' FROM CADWELD MUST BE REMOVED AND WELD SHALL BE SPRAYED WITH COLD GALVANIZE AFTER COMPLETION.

GENERAL GROUNDING NOTES CONTINUED:

17. FERROUS METAL CLIPS WHICH COMPLETELY SURROUND THE GROUNDING CONDUCTOR SHALL NOT BE USED. CLIPS OF THE FOLLOWING MATERIALS AND TYPES MAY BE USED TO SUPPORT GROUNDING CONDUCTORS.

   - PLASTIC CLIPS
   - STAINLESS STEEL CLIPS WHICH DO NOT COMPLETELY SURROUND THE GROUNDING CONDUCTOR.
   - FERROUS METAL CLIPS WHICH DO NOT COMPLETELY SURROUND THE GROUNDING CONDUCTOR.

18. ALL BELOW GRADE GROUNDING CONDUCTORS SHALL BE BARE SOLID COPPER WIRE. ABOVE–GRADE GROUNDING CONDUCTORS MAY BE EITHER OR AS INDICATED ON THE DRAWINGS:

   - BARE TINNED SOLID COPPER WIRE
   - THWN–INSULATED, CONTINUOUS GREEN COLOR, SOLID COPPER WIRE
   - THWN–INSULATED, CONTINUOUS GREEN COLOR STRANDED COPPER WIRE

   A. THE UNDERGROUND GROUND RING SHALL HAVE A #2 AWG BARE TINNED SOLID COPPER WIRE.

   B. #2 THWN SHALL BE STRANDED COPPER WITH GREEN THWN INSULATION SUITABLE FOR WET INSTALLATION (OR SOME ABOVE GROUND APPLICATIONS, I.E. INDOOR GROUNDING RING)

   C. #2 BARE TINNED COPPER SHALL BE SOLID. ALL BURIED WIRE SHALL MEET THIS CRITERIA INCLUDING CABLE TRAY GROUNDING WIRES AND WIRES INDICATED ON THE DRAWINGS.

   (THE MINIMUM BEND RADIUS IS 8" FOR #6 AWG AND SMALLER, AND 12 INCHES FOR WIRE LARGER THAN #6 AWG)

19. ALL HARDWARE, BOLTS, NUTS, WASHERS, AND LOCK WASHERS SHALL BE 18–8 STAINLESS STEEL. EVERY CONNECTION SHALL BE (BOLT–FLATWASHER–BUSS–LUG–FLATWASHER–LOCKWASHER–NUT), IN THAT EXACT ORDER WITH NUT FACING OUTWARD, BACK TO BACK LUGGING SHALL BE (BOLT–FLATWASHER–LUG–FLATWASHER–LUG –BUSS–LUG–FLATWASHER–LOCK WASHER–NUT), IN THAT EXACT ORDER IS ACCEPTED WHERE NECESSARY TO CONNECT MANY LUGS TO A BUSS BAR. STACKING OF LUGS, BUS–LUG–LUG, IS NOT ACCEPTABLE.

20. THE COMPRESSION GROUND LUG FOR #2 AWG BARE SOLID GROUNDING CONDUCTORS SHALL BE BURNDY TYPE YA3C–2TC.

21. THE ANTENNA CABLES SHALL BE GROUNDED AT THE TOP AND BOTTOM OF THE VERTICAL RUN. THE ANTENNA CABLE SHIELD SHALL BE BONDED TO A COPPER GROUND BUS AT THE LOWEST POINT OF THE VERTICAL RUN. THE ANTENNA CABLE SHELD SHALL BE GROUNDED JUST BEFORE ENTERING THE BTS. GROUNDING KITS ON COAX CABLE SHALL HAVE A MINIMUM BEND OF 6" AND SHALL BE KEPT AS CLOSE TO VERTICAL AS POSSIBLE. FLAT WASHER SUPPLIED WITH GROUND KITS MUST BE REPLACED WITH SMALLER STAINLESS STEEL FLAT WASHERS, WASHERS MUST REMAIN FLAT AGAINST GROUND BAR, ALL FASTENERS MUST BE STAINLESS STEEL AND KOPR–SHIELD MUST BE USED ON BOTH SIDES OF THE GROUND BAR.

THE INFORMATION CONTAINED IN THIS SET OF CONSTRUCTION DOCUMENTS IS PROPRIETARY BY NATURE. ANY USE OR DISCLOSURE OTHER THAN THAT WHICH RELATES TO CARRIER SERVICES IS STRICTLY PROHIBITED.

AT&T
930 NATIONAL PARKWAY
SCHAUMBURG, IL 60173

NEXIUS
DANIEL KALINA
SITE ACQUISITION SPECIALIST
PHONE: 630-946-7741
DANIEL.KALINA@NEXIUS.COM

WESTCHESTER SERVICES LLC
604 FOX GLEN
BARRINGTON, IL 60010
PHONE: 847–277–0070
AE@Westchesterservices.com

JOHN M. BANKS
ARCHITECT
604 FOX GLEN
BARRINGTON, IL 60010
TELEPHONE: 847–277–0070
FAX : 847–277–0080
jbanks@westchesterservices.com

NSB
15515920/IL4218
ILL04218
525 VILLAGE CENTER DRIVE
BURR RIDGE, IL 60527

REVISIONS			
REV.	DATE	DESCRIPTION	INITIALS
0	07/05/22	PERMIT/CONSTRUCTION	CG
A	06/09/22	PRELIMINARY CD	DS

NOT FOR CONSTRUCTION UNLESS LABELED AS CONSTRUCTION SET

07/05/22

STATE OF ILLINOIS — JOHN M. BANKS — 001-014586 — LICENSED ARCHITECT

EXP. DATE: 11/30/22

"I HEREBY CERTIFY THAT THESE PLANS WERE PREPARED BY ME OR UNDER MY DIRECT SUPERVISION AND THAT I AM A DULY REGISTERED ARCHITECT UNDER THE LAWS OF THE STATE OF ILLINOIS"

SHEET TITLE
NOTES & SPECIFICATIONS

SHEET NUMBER
SP4

THE INFORMATION CONTAINED IN THIS SET OF CONSTRUCTION DOCUMENTS IS PROPRIETARY BY NATURE. ANY USE OR DISCLOSURE OTHER THAN THAT WHICH RELATES TO CARRIER SERVICES IS STRICTLY PROHIBITED.

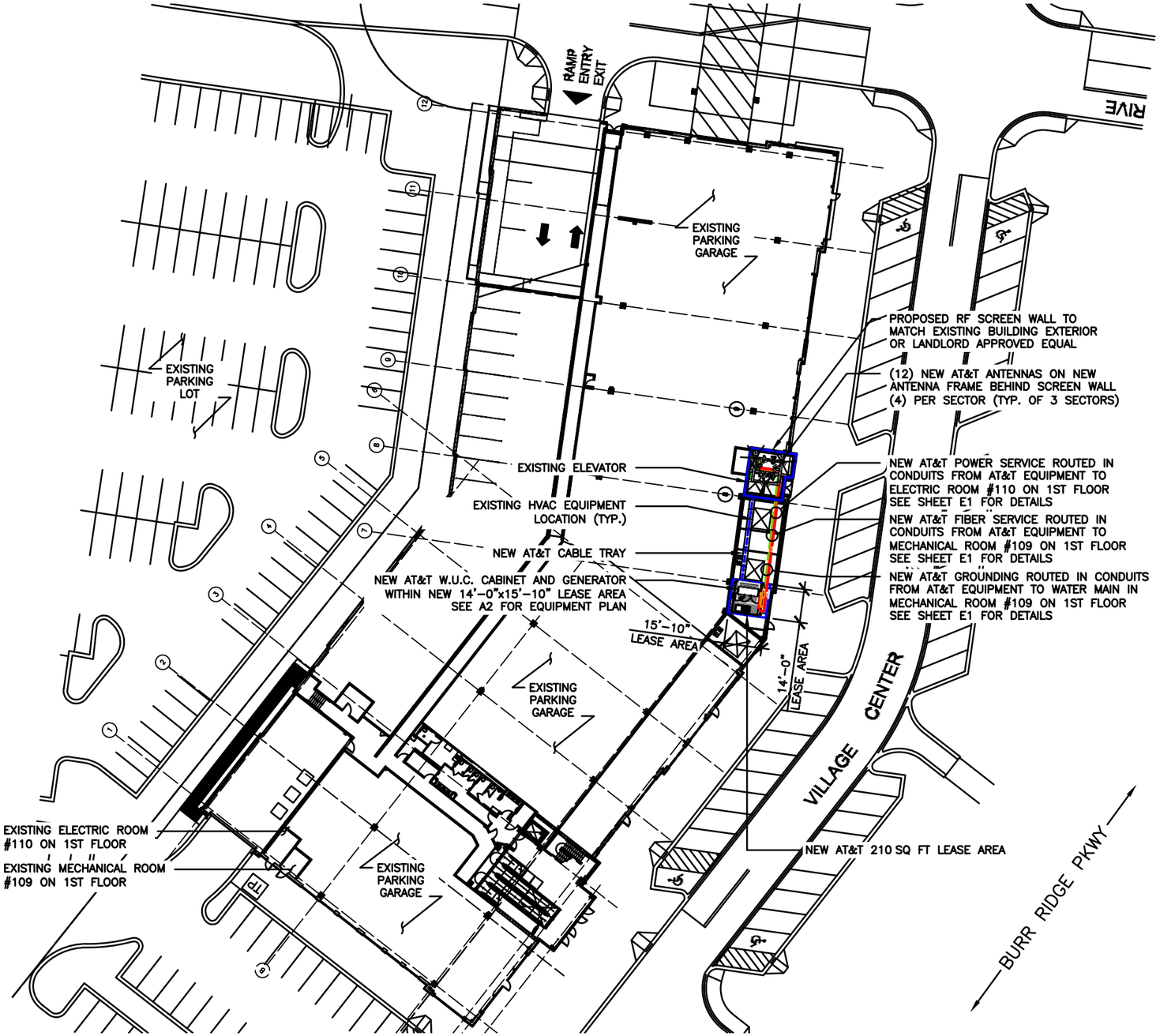

OVERALL SITE PLAN

0 25' 50'

SCALE: 1"=50'-0" (11x17)
(OR) 2"=50'-0" (22x34)

2



AERIAL

SCALE: N.T.S.

1

AT&T
930 NATIONAL PARKWAY
SCHAUMBURG, IL 60173

NEXIUS
DANIEL KALINA
SITE ACQUISITION SPECIALIST
PHONE: 630-946-7741
DANIEL.KALINA@NEXIUS.COM

WESTCHESTER SERVICES LLC
604 FOX GLEN
BARRINGTON, IL 60010
PHONE: 847-277-0070
AE@Westchesterservices.com

JOHN M. BANKS ARCHITECT
604 FOX GLEN
BARRINGTON, IL 60010
TELEPHONE: 847-277-0070
FAX : 847-277-0080
jbanks@westchesterservices.com

NSB
15515920/IL4218
ILL04218
525 VILLAGE CENTER DRIVE
BURR RIDGE, IL 60527

REVISIONS

REV.	DATE	DESCRIPTION	INITIALS
0	07/05/22	PERMIT/CONSTRUCTION	CG
A	06/09/22	PRELIMINARY CD	DS

NOT FOR CONSTRUCTION UNLESS LABELED AS CONSTRUCTION SET

07/05/22

STATE OF ILLINOIS — JOHN M. BANKS — 001-014586 — LICENSED ARCHITECT

EXP. DATE: 11/30/22

"I HEREBY CERTIFY THAT THESE PLANS WERE PREPARED BY ME OR UNDER MY DIRECT SUPERVISION AND THAT I AM A DULY REGISTERED ARCHITECT UNDER THE LAWS OF THE STATE OF ILLINOIS"

SHEET TITLE
SITE PLAN

SHEET NUMBER
A1

THE INFORMATION CONTAINED IN THIS SET OF CONSTRUCTION DOCUMENTS IS PROPRIETARY BY NATURE. ANY USE OR DISCLOSURE OTHER THAN THAT WHICH RELATES TO CARRIER SERVICES IS STRICTLY PROHIBITED.

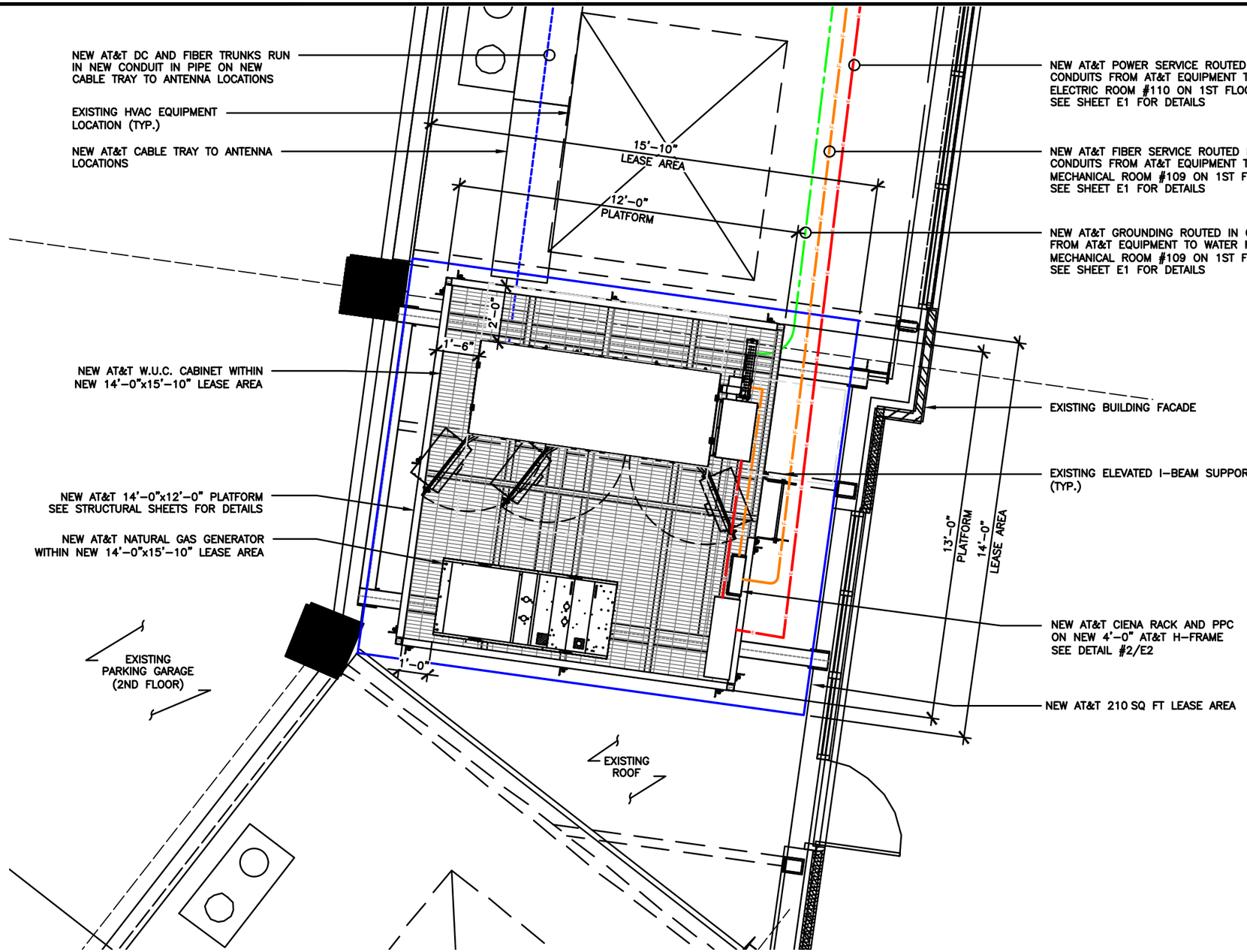

NOTE:
SEE S-1 FOR DIMENSIONAL LOCATIONS OF EQUIPMENT AND ANTENNA MOUNTS.



1. ELEVATIONS ARE ABOVE MEAN SEA LEVEL.
2. DO NOT SCALE DIMENSIONS FROM THIS DRAWING.
3. ALL EXISTING RECORDED EASEMENTS ARE INDICATED ON THIS DRAWING TO THE BEST OF THE ARCHITECT'S KNOWLEDGE PER VISUAL INSPECTION, SURVEY DRAWINGS, AND INFORMATION RECEIVED FROM AT&T WIRELESS.
4. REFER TO SP1 AND SP2 FOR EROSION CONTROL AND SOIL STABILIZATION METHODS IF NECESSARY.

GENERAL NOTES — 2

LOCATION:	BASE OF BUILDING
ELEVATION:	TBD' A.M.S.L. (@ BASE BUILDING)
LATITUDE:	41° 45' 9.468" 41.7526300
LONGITUDE:	-87° 54' 44.748" -87.9124300
HORIZONTAL DATUM:	NAD83
VERTICAL DATUM:	NAVD88

NORTH

SCALE: 1/4"=1'-0" (11x17)
(OR) 1/2"=1'-0" (22x34)

COMPOUND PLAN — 3

SURVEY BENCHMARK/PROJECT DATUM — 1

AT&T
930 NATIONAL PARKWAY
SCHAUMBURG, IL 60173

NEXIUS
DANIEL KALINA
SITE ACQUISITION SPECIALIST
PHONE: 630-946-7741
DANIEL.KALINA@NEXIUS.COM

WESTCHESTER SERVICES LLC
604 FOX GLEN
BARRINGTON, IL 60010
PHONE: 847-277-0070
AE@Westchesterservices.com

JOHN M. BANKS ARCHITECT
604 FOX GLEN
BARRINGTON, IL 60010
TELEPHONE: 847-277-0070
FAX : 847-277-0080
jbanks@westchesterservices.com

NSB
15515920/IL4218
ILL04218
525 VILLAGE CENTER DRIVE
BURR RIDGE, IL 60527

REVISIONS			
REV.	DATE	DESCRIPTION	INITIALS
0	07/05/22	PERMIT/CONSTRUCTION	CG
A	06/09/22	PRELIMINARY CD	DS

NOT FOR CONSTRUCTION UNLESS LABELED AS CONSTRUCTION SET

07/05/22
JOHN M. BANKS
001-014586
EXP. DATE: 11/30/22
"I HEREBY CERTIFY THAT THESE PLANS WERE PREPARED BY ME, OR UNDER MY DIRECT SUPERVISION AND THAT I AM A DULY REGISTERED ARCHITECT UNDER THE LAWS OF THE STATE OF ILLINOIS"

SHEET TITLE
COMPOUND PLAN & LEGEND

SHEET NUMBER
A2

ANTENNA NOTES:

1. THE SIZE, HEIGHT, AND DIRECTION OF THE ANTENNAS SHALL BE ADJUSTED TO ACHIEVE THE AZIMUTHS SPECIFIED AND LIMIT SHADOWING AND TO MEET THE SYSTEM REQUIREMENTS.

2. CONTRACTOR SHALL VERIFY HEIGHT OF THE ANTENNA WITH THE AT&T WIRELESS PROJECT MANAGER.

3. VERIFY TYPE AND SIZE OF TOWER LEG PRIOR TO ORDERING ANY ANTENNA MOUNT.

4. UNLESS NOTED OTHERWISE THE CONTRACTOR MUST PROVIDE ALL MATERIAL NECESSARY.

5. ANTENNA AZIMUTHS ARE DEGREES OFF OF TRUE NORTH, BEARING CLOCKWISE, IN WHICH ANTENNA FACE IS DIRECTED. ALL ANTENNAS (AND SUPPORTING STRUCTURES AS PRACTICAL) SHALL BE ACCURATELY ORIENTED IN THE SPECIFIED DIRECTION.

6. CONTRACTOR SHALL VERIFY ALL RF INFORMATION PRIOR TO CONSTRUCTION.

7. SWEEP TEST SHALL BE PERFORMED BY GENERAL CONTRACTOR AND SUBMITTED TO AT&T WIRELESS CONSTRUCTION SPECIALIST. TEST SHALL BE PERFORMED PER AT&T WIRELESS STANDARDS.

STRUCTURAL NOTES:

1. STRUCTURAL CALCULATIONS PREPARED BY JOHN M BANKS ARCHITECT. CONTRACTOR TO VERIFY WITH PROJECT MANAGER TO OBTAIN A COPY.

2. CONTRACTOR TO REFER TO STRUCTURAL CALCULATIONS FOR ADDITIONAL LOADS. NO ERECTION OR MODIFICATION OF BUILDING SHALL BE MADE WITHOUT APPROVAL OF STRUCTURAL ENGINEER.

THE INFORMATION CONTAINED IN THIS SET OF CONSTRUCTION DOCUMENTS IS PROPRIETARY BY NATURE. ANY USE OR DISCLOSURE OTHER THAN THAT WHICH RELATES TO CARRIER SERVICES IS STRICTLY PROHIBITED.

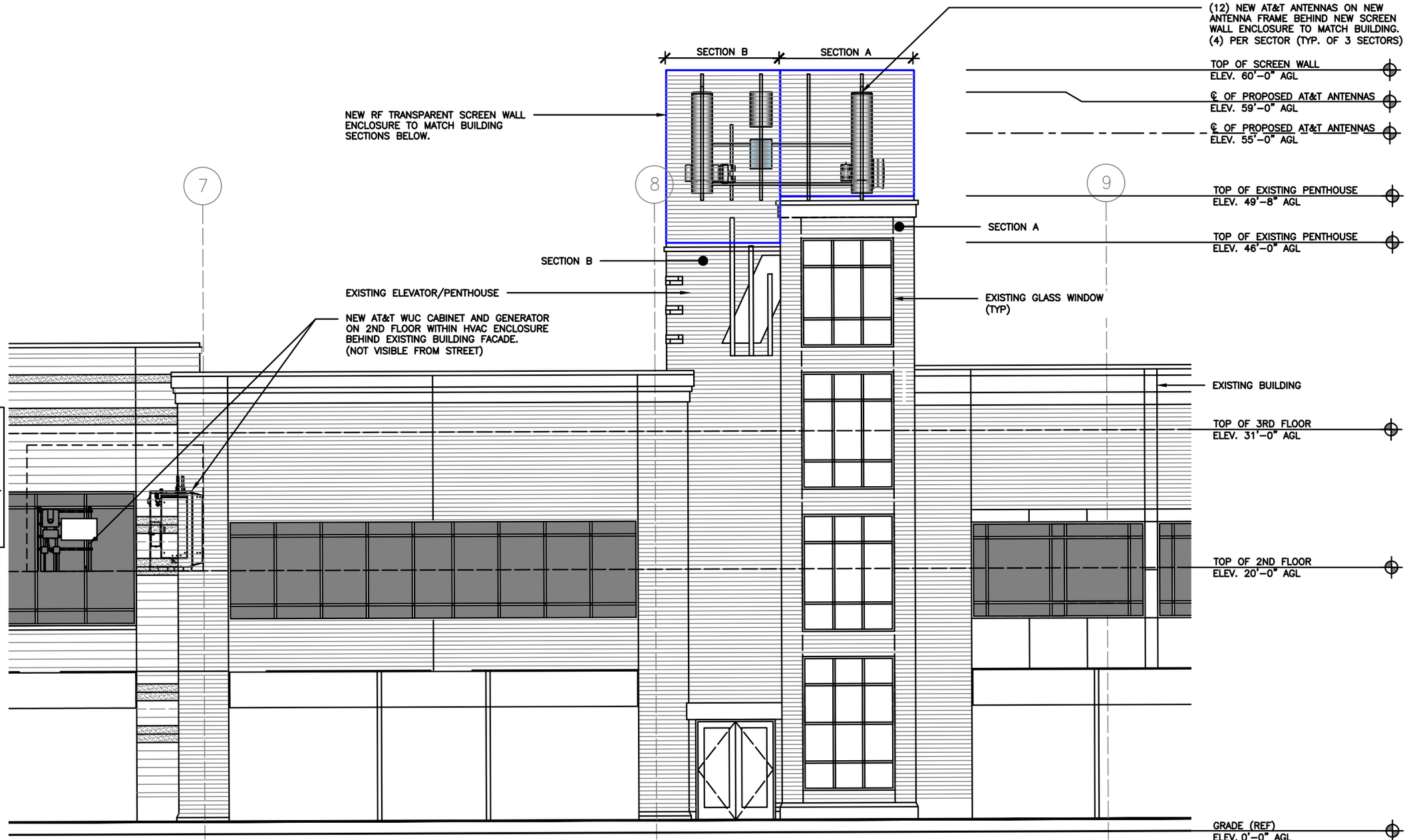

PROPOSED SOUTH BUILDING ELEVATION

0 4' 8'

SCALE: 1/8"=1'-0" (11x17)
(OR) 1/16"=1'-0" (22x34)

1

AT&T
930 NATIONAL PARKWAY
SCHAUMBURG, IL 60173

NEXIUS
DANIEL KALINA
SITE ACQUISITION SPECIALIST
PHONE: 630-946-7741
DANIEL.KALINA@NEXIUS.COM

WESTCHESTER SERVICES LLC
604 FOX GLEN
BARRINGTON, IL 60010
PHONE: 847-277-0070
AE@Westchesterservices.com

JOHN M. BANKS ARCHITECT
604 FOX GLEN
BARRINGTON, IL 60010
TELEPHONE: 847-277-0070
FAX : 847-277-0080
jbanks@westchesterservices.com

NSB
15515920/IL4218
ILL04218
525 VILLAGE CENTER DRIVE
BURR RIDGE, IL 60527

REVISIONS			
REV.	DATE	DESCRIPTION	INITIALS
0	07/05/22	PERMIT/CONSTRUCTION	CG
A	06/09/22	PRELIMINARY CD	DS

NOT FOR CONSTRUCTION UNLESS LABELED AS CONSTRUCTION SET

07/05/22

STATE OF ILLINOIS
JOHN M. BANKS
001-014586
LICENSED ARCHITECT

EXP. DATE: 11/30/22

"I HEREBY CERTIFY THAT THESE PLANS WERE PREPARED BY ME OR UNDER MY DIRECT SUPERVISION AND THAT I AM A DULY REGISTERED ARCHITECT UNDER THE LAWS OF THE STATE OF ILLINOIS"

SHEET TITLE
BUILDING ELEVATION

SHEET NUMBER
A3

NOTE:
SEE S4 FOR DIMENSIONAL LOCATIONS OF EQUIPMENT AND ANTENNA MOUNTS.

EQUIPMENT LEASE AREA:	210 SQ FT
ANTENNAS LEASE AREAS:	380 SQ FT
TOTAL LEASE AREAS:	590 SQ FT

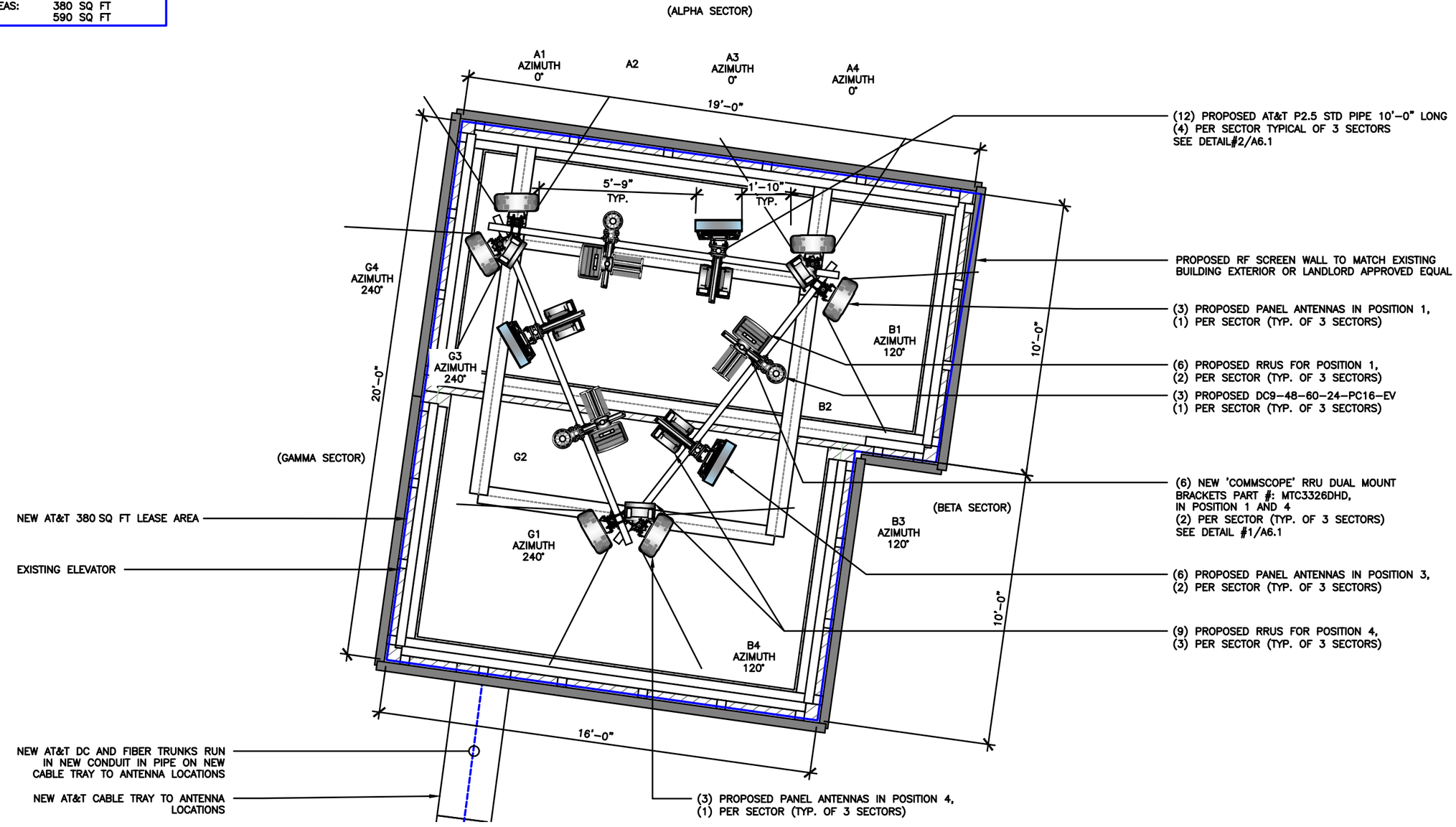

PROPOSED ANTENNA PLAN

0 2' 4'

SCALE: 1/4"=1'-0" (11x17)
(OR) 1/2"=1'-0" (22x34)

1

AT&T
930 NATIONAL PARKWAY
SCHAUMBURG, IL 60173

NEXIUS
DANIEL KALINA
SITE ACQUISITION SPECIALIST
PHONE: 630-946-7741
DANIEL.KALINA@NEXIUS.COM

WESTCHESTER SERVICES LLC
604 FOX GLEN
BARRINGTON, IL 60010
PHONE: 847-277-0070
AE@Westchesterservices.com

JOHN M. BANKS
ARCHITECT
604 FOX GLEN
BARRINGTON, IL 60010
TELEPHONE: 847-277-0070
FAX : 847-277-0080
jbanks@westchesterservices.com

NSB
15515920/IL4218
ILL04218
525 VILLAGE CENTER DRIVE
BURR RIDGE, IL 60527

REVISIONS

REV.	DATE	DESCRIPTION	INITIALS
0	07/05/22	PERMIT/CONSTRUCTION	CG
A	06/09/22	PRELIMINARY CD	DS

NOT FOR CONSTRUCTION UNLESS LABELED AS CONSTRUCTION SET

07/05/22
JOHN M. BANKS
001-014586
EXP. DATE: 11/30/22
"I HEREBY CERTIFY THAT THESE PLANS WERE PREPARED BY ME OR UNDER MY DIRECT SUPERVISION AND THAT I AM A DULY REGISTERED ARCHITECT UNDER THE LAWS OF THE STATE OF ILLINOIS"

SHEET TITLE
ANTENNA PLAN

SHEET NUMBER
A4

THE INFORMATION CONTAINED IN THIS SET OF CONSTRUCTION DOCUMENTS IS PROPRIETARY BY NATURE. ANY USE OR DISCLOSURE OTHER THAN THAT WHICH RELATES TO CARRIER SERVICES IS STRICTLY PROHIBITED.

1. CONTRACTOR IS TO REFER TO AT&T'S MOST CURRENT RADIO FREQUENCY DATA SHEET (RFDS) PRIOR TO CONSTRUCTION.
2. CABLE LENGTHS WERE DETERMINED BASED ON THE DESIGN DRAWING. CONTRACTOR TO VERIFY ACTUAL LENGTH DURING PRE-CONSTRUCTION WALK.
3. CONTRACTOR TO USE ROSENBERGER FIBER LINE HANGER COMPONENTS (OR ENGINEER APPROVED EQUAL).

NOTES

SCALE N.T.S. | 3

CABLE MARKING LOCATIONS TABLE

NO	LOCATIONS
1	EACH TOP-JUMPER SHALL BE COLOR CODED WITH (1) SET OF 3" WIDE BANDS.
2	EACH MAIN COAX SHALL BE COLOR CODED WITH (1) SET OF 3" WIDE BANDS NEAR THE TOP-JUMPER CONNECTION AND WITH (1) SET OF 3/4" WIDE COLOR BANDS JUST PRIOR TO ENTERING THE BTS OR TRANSMITTER BUILDING.
3	CABLE ENTRY PORT ON THE INTERIOR OF THE SHELTER.
4	ALL BOTTOM JUMPERS SHALL BE COLOR CODED WITH (1) SET OF 3/4" WIDE BANDS ON EACH END OF THE BOTTOM JUMPER.
5	ALL BOTTOM JUMPERS SHALL BE COLOR CODED WITH (1) SET OF 3/4" WIDE BANDS ON EACH END OF THE BOTTOM JUMPER.

1. THE ANTENNA SYSTEM COAX SHALL BE LABELED WITH VINYL TAPE.
2. THE STANDARD IS BASED ON EIGHT COLORED TAPES-RED, BLUE, GREEN, YELLOW, ORANGE, BROWN, WHITE, AND VIOLET. THESE TAPES MUST BE 3/4" WIDE & UV RESISTANT SUCH AS SCOTCH 35 VINYL ELECTRICAL COLOR CODING TAPE AND SHOULD BE READILY AVAILABLE TO THE ELECTRICIAN OR CONTRACTOR ON SITE. ALL TAPE SHALL BE INSTALLED USING A MINIMUM OF (3) THREE WRAPS OF TAPE AND SHALL BE NEATLY TRIMMED AND SMOOTHED OUT SO AS TO AVOID UNRAVELING.
3. USING COLOR BANDS ON THE CABLES, MARK ALL RF CABLE BY SECTOR AND CABLE NUMBER AS SHOWN ON "CABLE COLOR CHART".
4. WHEN AN EXISTING COAXIAL LINE THAT IS INTENDED TO BE A SHARED LINE BETWEEN TECHNOLOGIES IS ENCOUNTERED, THE CONTRACTOR SHALL REMOVE THE EXISTING COLOR CODING SCHEME AND REPLACE IT WITH THE COLOR CODING STANDARD. IN THE ABSENCE OF AN EXISTING COLOR CODING AND TAGGING SCHEME, OR WHEN INSTALLING PROPOSED COAXIAL CABLES, THIS GUIDELINE SHALL BE IMPLEMENTED AT THAT SITE REGARDLESS OF TECHNOLOGY.
5. ALL COLOR BANDS INSTALLED AT THE TOP OF THE TOWER SHALL BE A MINIMUM OF 3" WIDE, AND SHALL HAVE A MINIMUM OF 3/4" OF SPACE BETWEEN EACH COLOR.
6. ALL COLOR CODES SHALL BE INSTALLED SO AS TO ALIGN NEATLY WITH ONE ANOTHER FROM SIDE-TO-SIDE.
7. IF EXISTING CABLES AT THE SITE ALREADY HAVE A COLOR CODING SCHEME AND THEY ARE NOT INTENDED TO BE REUSED OR SHARED WITH THE NEW TECHNOLOGY, THE EXISTING COLOR CODING SCHEME SHALL REMAIN UNTOUCHED.

ANTENNA AND CABLING INFORMATION

SCALE N.T.S. | 2

PROPOSED ANTENNA CONFIGURATION AND CABLE SCHEDULE BASED ON RFDS DATES 05/03/22

SECTOR	POS	TECH	ANTENNA	ANTENNA ℄ HEIGHT	AZ	TMA/RRU	DC SURGE AND DISTRIBUTION	CABLE TYPE	CABLE LENGTH	DOWN TILTS
A	1	LTE 700 5G 850 LTE 1900 LTE AWS 5G AWS	NNH4-65B-R6H4 (N)	55'-0" AGL	0°	(1) RRH 4449 B5/B12 (N) (1) RRH 8843 B2/B66A (N)	(1) DC9-48-60-24-PC16-EV (N)	(2) DC TRUNK (N) (1) 24 PAIR FIBER (N)	130'	0
	2	EMPTY	-		-	-		-		0
	3	5G CBAND 5G DoD	AIR6449 B77D AIR6419 B77G		0°			DC (SHARED WITH A1) FIBER (SHARED WITH A1)		
	4	LTE 700 LTE 1900 5G 1900 LTE WCS	NNH4-65B-R6H4 (N)		0°	(1) RRH 4478 B14 (N) (1) RRH 4415 B25 (N) (1) RRH 4415 B30 (N)		DC (SHARED WITH A1) FIBER (SHARED WITH A1)		0
B	1	LTE 700 5G 850 LTE 1900 LTE AWS 5G AWS	NNH4-65B-R6H4 (N)	55'-0" AGL	120°	4449 B5/B12 (N) 4415 B30 (N)	(1) DC9-48-60-24-PC16-EV (N)	(2) DC TRUNK (N) (1) 24 PAIR FIBER (N)	130'	0
	2	EMPTY	-		-	-		-		0
	3	5G CBAND 5G DoD	AIR6449 B77D AIR6419 B77G		120°			DC (SHARED WITH B1) FIBER (SHARED WITH B1)		
	4	LTE 700 LTE 1900 5G 1900 LTE WCS	NNH4-65B-R6H4 (N)		120°	4478 B14 (N) 8843 B2/B66A (N)		DC (SHARED WITH B1) FIBER (SHARED WITH B1)		0
C	1	LTE 700 5G 850 LTE 1900 LTE AWS 5G AWS	NNH4-65B-R6H4 (N)	55'-0" AGL	240°	4449 B5/B12 (N) 4415 B30 (N)	(1) DC9-48-60-24-PC16-EV (N)	(2) DC TRUNK (N) (1) 24 PAIR FIBER (N)	130'	0
	2	EMPTY	-		-	-		-		0
	3	5G CBAND 5G DoD	AIR6449 B77D AIR6419 B77G		240°			DC (SHARED WITH C1) FIBER (SHARED WITH C1)		
	4	LTE 700 LTE 1900 5G 1900 LTE WCS	NNH4-65B-R6H4 (N)		240°	4478 B14 (N) 8843 B2/B66A (N)		DC (SHARED WITH C1) FIBER (SHARED WITH C1)		0

CABLE MARKING COLOR CONVENTION TABLE

ALPHA, A, X, #1	A1-1 +45	A1-2 -45	A2-1 +45	A2-2 -45	A3-1 +45	A3-2 -45	A4-1 +45	A4-2 -45
Sector	RED	RED	RED	RED	RED	RED	RED	RED
Antenna	WHITE	WHITE	ORANGE	ORANGE	BROWN	BROWN	VIOLET	VIOLET
Port (+/-)	SLATE	BROWN	SLATE	BROWN	SLATE	BROWN	SLATE	BROWN
BAND (Low/Hi)	ORANGE/	ORANGE/	ORANGE/	ORANGE/	ORANGE/	ORANGE/	ORANGE/	ORANGE/
*See notes 13 and	VIOLET	VIOLET	VIOLET	VIOLET	VIOLET	VIOLET	VIOLET	VIOLET
BEAM (Left/Right)	SLATE/	SLATE/	SLATE/	SLATE/	SLATE/	SLATE/	SLATE/	SLATE/
*See note 14 below	YELLOW	YELLOW	YELLOW	YELLOW	YELLOW	YELLOW	YELLOW	YELLOW
BETA, B, Y, #2	B1-1 +45	B1-2 -45	B2-1 +45	B2-2 -45	B3-1 +45	B3-2 -45	B4-1 +45	B4-2 -45
Sector	BLUE	BLUE	BLUE	BLUE	BLUE	BLUE	BLUE	BLUE
Antenna	WHITE	WHITE	ORANGE	ORANGE	BROWN	BROWN	VIOLET	VIOLET
Port	SLATE	BROWN	SLATE	BROWN	SLATE	BROWN	SLATE	BROWN
BAND (Low/Hi)	ORANGE/	ORANGE/	ORANGE/	ORANGE/	ORANGE/	ORANGE/	ORANGE/	ORANGE/
*See notes 13 and	VIOLET	VIOLET	VIOLET	VIOLET	VIOLET	VIOLET	VIOLET	VIOLET
BEAM (Left/Right)	SLATE/	SLATE/	SLATE/	SLATE/	SLATE/	SLATE/	SLATE/	SLATE/
*See note 14 below	YELLOW	YELLOW	YELLOW	YELLOW	YELLOW	YELLOW	YELLOW	YELLOW
GAMMA, C, Z, #3	C1-1 +45	C1-2 -45	C2-1 +45	C2-2 -45	C3-1 +45	C3-2 -45	C4-1 +45	C4-2 -45
Sector	GREEN	GREEN	GREEN	GREEN	GREEN	GREEN	GREEN	GREEN
Antenna	WHITE	WHITE	ORANGE	ORANGE	BROWN	BROWN	VIOLET	VIOLET
Port	SLATE	BROWN	SLATE	BROWN	SLATE	BROWN	SLATE	BROWN
BAND (Low/Hi)	ORANGE/	ORANGE/	ORANGE/	ORANGE/	ORANGE/	ORANGE/	ORANGE/	ORANGE/
*See notes 13 and	VIOLET	VIOLET	VIOLET	VIOLET	VIOLET	VIOLET	VIOLET	VIOLET
BEAM (Left/Right)	SLATE/	SLATE/	SLATE/	SLATE/	SLATE/	SLATE/	SLATE/	SLATE/
*See note 14 below	YELLOW	YELLOW	YELLOW	YELLOW	YELLOW	YELLOW	YELLOW	YELLOW

Site Fiber Color Code Chart

Sector A

Fiber Cable Pair #	Tape Band Color: Red	Function
1		LTE-700-A-RRH-A1
2		LTE-AWS-A-RRH-A2
3		LTE/UMTS-850/1900-A-RRH-A3
4		Sector A Spare

Sector B

Fiber Cable Pair #	Tape Band Color: Blue	Function
5		LTE-700-B-RRH-B1
6		LTE-AWS-B-RRH-B2
7		LTE/UMTS-850/1900-B-RRH-B3
8		Sector B Spare

Sector C

Fiber Cable Pair #	Tape Band Color: Green	Function
9		LTE-700-C-RRH-C1
10		LTE-AWS-C-RRH-C2
11		LTE/UMTS-850/1900-C-RRH-C3
12		Sector C Spare

= No Tape Band

* INCLUDES SAFETY FACTOR OF 20' FT. (10 FT. AT BOTH ENDS OF CABLE RUN). CONTRACTOR TO VERIFY RF DATA WITH AT&T WIRELESS CONSTRUCTION MANAGER AND/OR RF ENGINEER PRIOR TO INSTALLATION

(N) = NEW
(X) = EXISTING
(XR) = EXISTING/RELOCATED
(E) = ELECTRICAL
(M) = MECHANICAL

SCHEDULE

SCALE N.T.S. | 1

THE INFORMATION CONTAINED IN THIS SET OF CONSTRUCTION DOCUMENTS IS PROPRIETARY BY NATURE. ANY USE OR DISCLOSURE OTHER THAN THAT WHICH RELATES TO CARRIER SERVICES IS STRICTLY PROHIBITED.

AT&T
930 NATIONAL PARKWAY
SCHAUMBURG, IL 60173

NEXIUS
DANIEL KALINA
SITE ACQUISITION SPECIALIST
PHONE: 630-946-7741
DANIEL.KALINA@NEXIUS.COM

WESTCHESTER SERVICES LLC
604 FOX GLEN
BARRINGTON, IL 60010
PHONE: 847-277-0070
AE@Westchesterservices.com

JOHN M. BANKS
ARCHITECT
604 FOX GLEN
BARRINGTON, IL 60010
TELEPHONE: 847-277-0070
FAX : 847-277-0080
jbanks@westchesterservices.com

NSB
15515920/IL4218
ILL04218
525 VILLAGE CENTER DRIVE
BURR RIDGE, IL 60527

REVISIONS			
REV.	DATE	DESCRIPTION	INITIALS
0	07/05/22	PERMIT/CONSTRUCTION	CG
A	06/09/22	PRELIMINARY CD	DS

NOT FOR CONSTRUCTION UNLESS LABELED AS CONSTRUCTION SET

07/05/22

STATE OF ILLINOIS JOHN M. BANKS 001-014586 LICENSED ARCHITECT

EXP. DATE 11/30/22

"I HEREBY CERTIFY THAT THESE PLANS WERE PREPARED BY ME OR UNDER MY DIRECT SUPERVISION AND THAT I AM A DULY REGISTERED ARCHITECT UNDER THE LAWS OF THE STATE OF ILLINOIS"

SHEET TITLE: SCHEDULE & CABLE NOTES

SHEET NUMBER: A5

THE INFORMATION CONTAINED IN THIS SET OF CONSTRUCTION DOCUMENTS IS PROPRIETARY BY NATURE. ANY USE OR DISCLOSURE OTHER THAN THAT WHICH RELATES TO CARRIER SERVICES IS STRICTLY PROHIBITED.

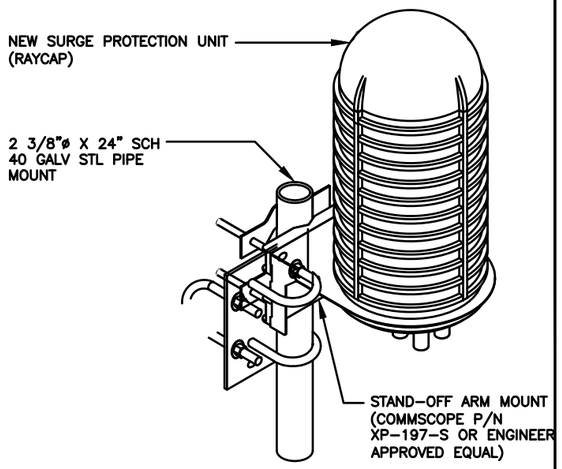

DC9-48-60-24-PC16-EV DETAIL

SCALE N.T.S. | 8

ERICSSON RRUS 4415 B25
DIMENSIONS, HxWxD: 14.96"x13.19"x5.39"

WEIGHT, WITHOUT MOUNTING KIT: ±21 kg (46 lbs)

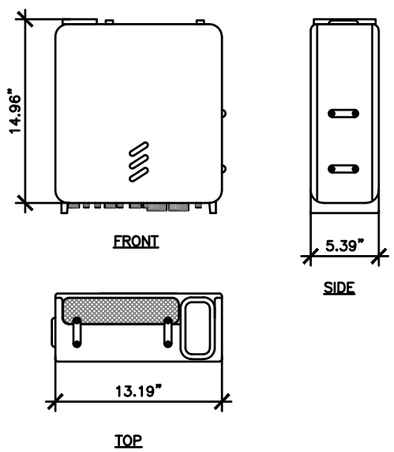

RRU DETAIL

SCALE N.T.S. | 7

ERICSSON RRUS 4478 B14
DIMENSIONS, HxWxD: 16.5"x13.4"x7.7"

WEIGHT, WITHOUT MOUNTING KIT: ±27.2 kg (59.9 lbs)

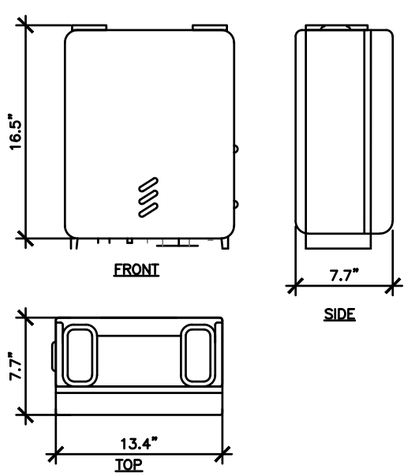

RRU DETAIL

SCALE N.T.S. | 5

ERICSSON RRUS 4415 B30
DIMENSIONS, HxWxD: 14.96"x13.19"x5.39"

WEIGHT, WITHOUT MOUNTING KIT: ±21 kg (46 lbs)

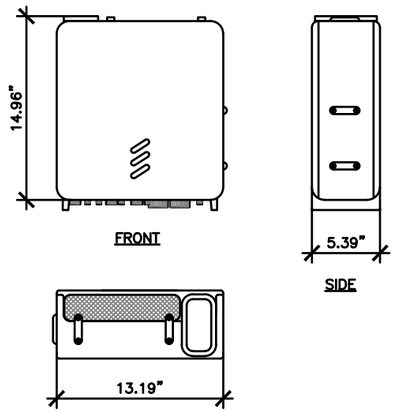

RRU DETAIL

SCALE N.T.S. | 4

ERICSSON RRUS 4449 B5/B12
DIMENSIONS, HxWxD: 28"x15"x10"

WEIGHT, WITHOUT MOUNTING KIT: 85 lbs

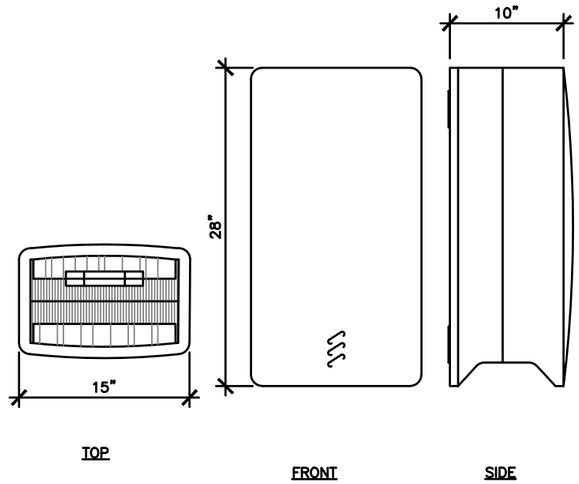

RRU DETAIL

SCALE N.T.S. | 3

ERICSSON RRUS 8843 B2/B66A

DIMENSIONS, HxWxD: 14.96"x13.19"x9.25"

WEIGHT, WITHOUT MOUNTING KIT: 70 lbs

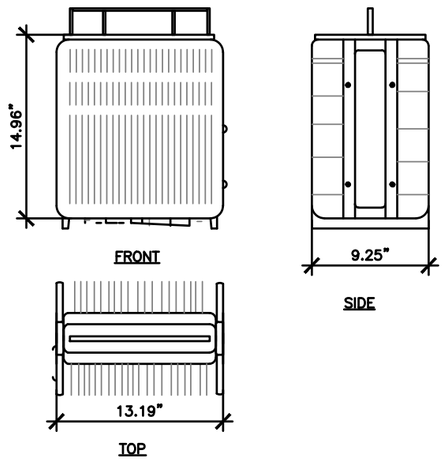

NOT USED

SCALE N.T.S. | 2

ANTENNA DETAIL

SCALE N.T.S. | 1

COMMSCOPE ANTENNAS NNH4-65B-R6H4

DIMENSIONS, HXWXD:	72.0"X19.6"X7.8"
SURVIVAL WIND SPEED:	>150 MPH
WEIGHT, WITHOUT MOUNTING:	83.0 LBS.
CONNECTOR POSITION:	BOTTOM

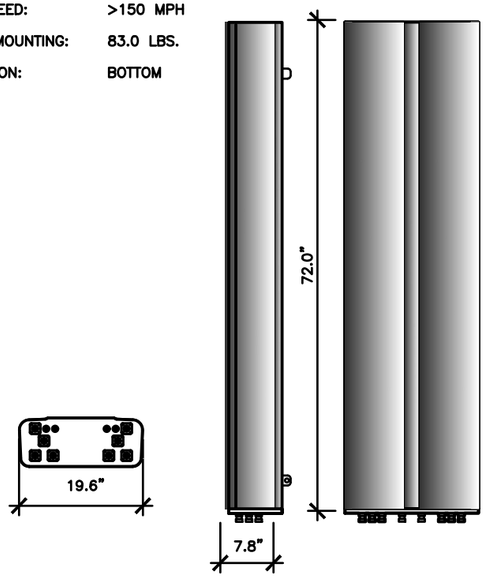

AT&T
930 NATIONAL PARKWAY
SCHAUMBURG, IL 60173

NEXIUS
DANIEL KALINA
SITE ACQUISITION SPECIALIST
PHONE: 630-946-7741
DANIEL.KALINA@NEXIUS.COM

WESTCHESTER SERVICES LLC
604 FOX GLEN
BARRINGTON, IL 60010
PHONE: 847-277-0070
AE@Westchesterservices.com

JOHN M. BANKS ARCHITECT
604 FOX GLEN
BARRINGTON, IL 60010
TELEPHONE: 847-277-0070
FAX : 847-277-0080
jbanks@westchesterservices.com

NSB
15515920/IL4218
ILL04218
525 VILLAGE CENTER DRIVE
BURR RIDGE, IL 60527

REVISIONS

REV.	DATE	DESCRIPTION	INITIALS
0	07/05/22	PERMIT/CONSTRUCTION	CG
A	06/09/22	PRELIMINARY CD	DS

NOT FOR CONSTRUCTION UNLESS LABELED AS CONSTRUCTION SET

07/05/22
JOHN M. BANKS
001-014586
EXP. DATE: 11/30/22
"I HEREBY CERTIFY THAT THESE PLANS WERE PREPARED BY ME OR UNDER MY DIRECT SUPERVISION AND THAT I AM A DULY REGISTERED ARCHITECT UNDER THE LAWS OF THE STATE OF ILLINOIS"

SHEET TITLE
ANTENNA, RRUS & RAYCAP DETAILS

SHEET NUMBER
A6

ERICSSON AIR6449 N77D

DIMENSIONS, HxWxD: (30.4"x15.9"x8.0")
WEIGHT, WITHOUT MOUNTING BRACKET: (81.6 lbs)

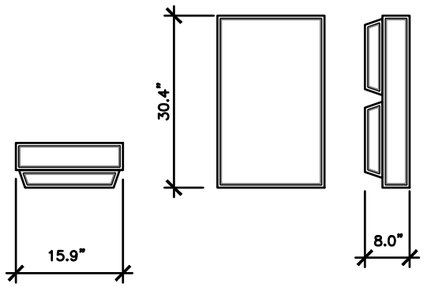

ANTENNA DETAIL

SCALE N.T.S. 4

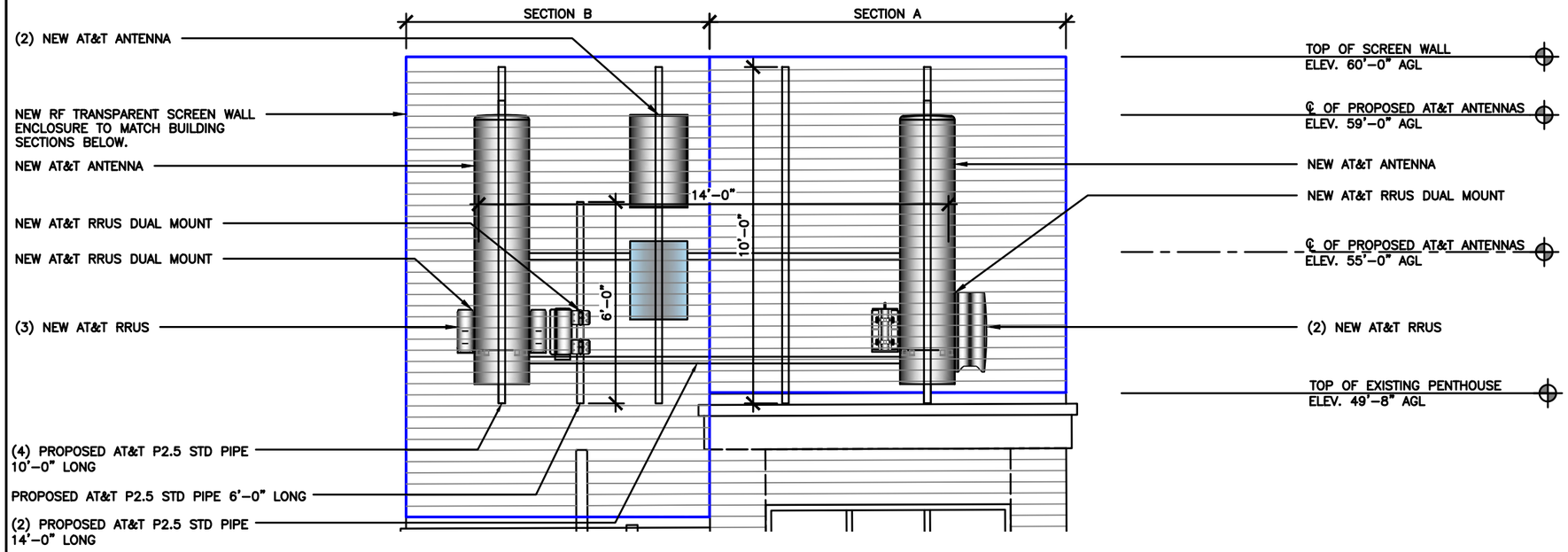

WALK STEP DETAIL

SCALE N.T.S. 2

ERICSSON AIR6419 N77G

DIMENSIONS, HxWxD: (28.3"x16.1"x7.9")
WEIGHT, WITHOUT MOUNTING BRACKET: (66.1 lbs)

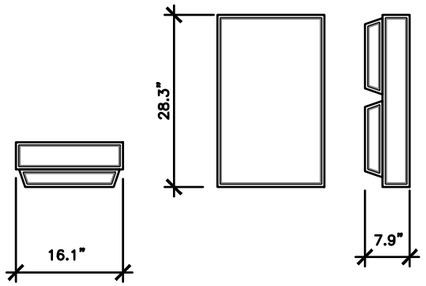

ANTENNA DETAIL

SCALE N.T.S. 3

ITEM	PART NO.	DESCRIPTION	QTY.	WEIGHT
1	MTC332625	HD Swing Arm RRU Mount	2	7.58 LBS
2	MTC332626	Dual RRU Mount Weldment	2	9.00 LBS
3	MTC332629	Back Clamp Dual RRU Mount	2	2.13 LBS
4	MTC978703	M-10 X 30mm Hex Bolt, SS	8	0 LBS
5	SWF-03	3/8" SS FLAT WASHER	8	0.01 LBS
6	SWL-03	3/8" SS LOCK WASHER	8	0.00 LBS
7	GD03800	3/8" X 8" GALV THREADED ROD	8	0.25 LBS
8	GWL-03	3/8" GALV LOCK WASHER	16	0.00 LBS
9	GN-03	3/8" GALV HEX NUT	24	0.04 LBS
10	GB-03505	3/8" X 5" GALV BOLT KIT	4	0.18 LBS

COMMSCOPE
PART#: MTC3326DHD

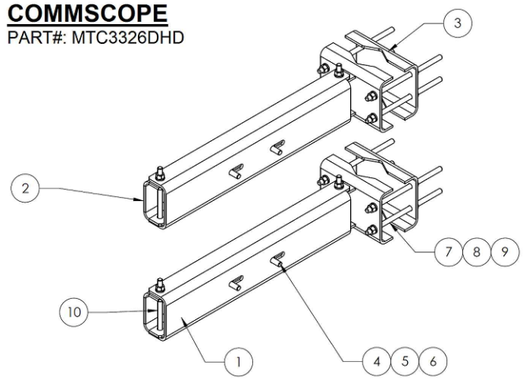

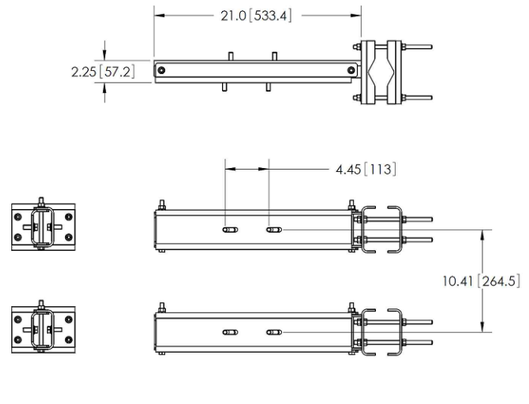

DUAL RRUS MOUNTING DETAIL

SCALE N.T.S. 1

AT&T
930 NATIONAL PARKWAY
SCHAUMBURG, IL 60173

NEXIUS
DANIEL KALINA
SITE ACQUISITION SPECIALIST
PHONE: 630-946-7741
DANIEL.KALINA@NEXIUS.COM

WESTCHESTER SERVICES LLC
604 FOX GLEN
BARRINGTON, IL 60010
PHONE: 847-277-0070
AE@Westchesterservices.com

JOHN M. BANKS ARCHITECT
604 FOX GLEN
BARRINGTON, IL 60010
TELEPHONE: 847-277-0070
FAX : 847-277-0080
jbanks@westchesterservices.com

NSB
15515920/IL4218
ILL04218
525 VILLAGE CENTER DRIVE
BURR RIDGE, IL 60527

REVISIONS

REV.	DATE	DESCRIPTION	INITIALS
0	07/05/22	PERMIT/CONSTRUCTION	CG
A	06/09/22	PRELIMINARY CD	DS

NOT FOR CONSTRUCTION UNLESS LABELED AS CONSTRUCTION SET

07/05/22
STATE OF ILLINOIS
JOHN M. BANKS
001-014586
LICENSED ARCHITECT
EXP. DATE: 11/30/22
"I HEREBY CERTIFY THAT THESE PLANS WERE PREPARED BY ME OR UNDER MY DIRECT SUPERVISION AND THAT I AM A DULY REGISTERED ARCHITECT UNDER THE LAWS OF THE STATE OF ILLINOIS"

SHEET TITLE
ANTENNA, RRUS & RAYCAP DETAILS

SHEET NUMBER
A6.1

THE INFORMATION CONTAINED IN THIS SET OF CONSTRUCTION DOCUMENTS IS PROPRIETARY BY NATURE. ANY USE OR DISCLOSURE OTHER THAN THAT WHICH RELATES TO CARRIER SERVICES IS STRICTLY PROHIBITED.

THE INFORMATION CONTAINED IN THIS SET OF CONSTRUCTION DOCUMENTS IS PROPRIETARY BY NATURE. ANY USE OR DISCLOSURE OTHER THAN THAT WHICH RELATES TO CARRIER SERVICES IS STRICTLY PROHIBITED.

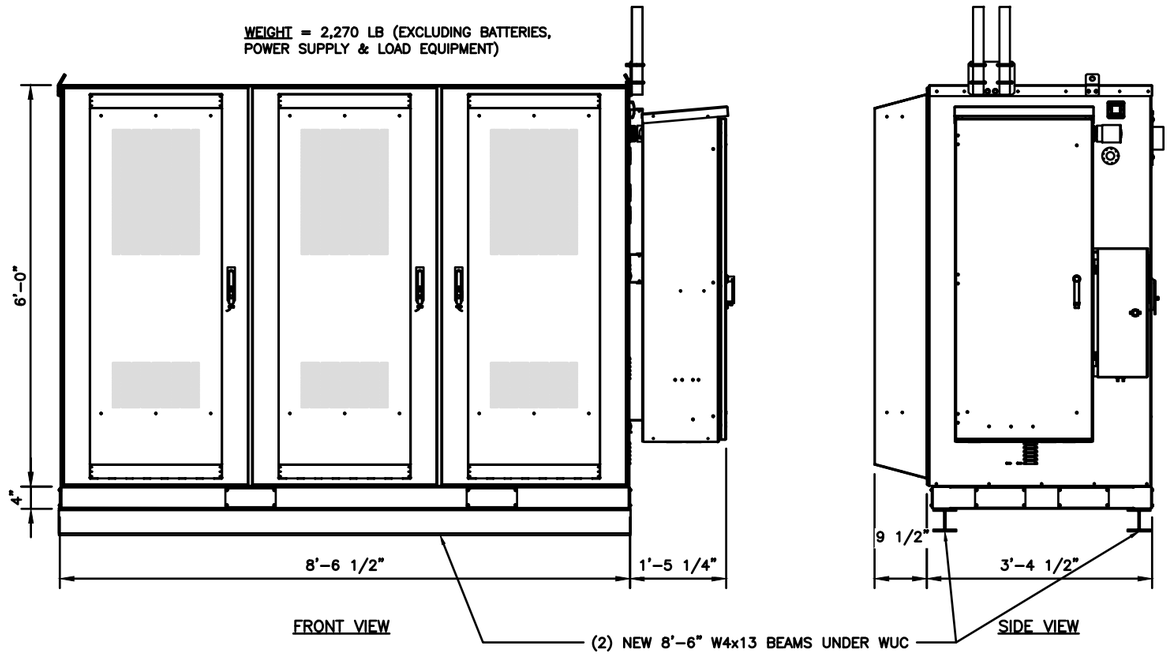

W.U.C. ELEVATIONS

SCALE N.T.S. 2

NOT USED

SCALE N.T.S. 1

AT&T
930 NATIONAL PARKWAY
SCHAUMBURG, IL 60173

NEXIUS
DANIEL KALINA
SITE ACQUISITION SPECIALIST
PHONE: 630-946-7741
DANIEL.KALINA@NEXIUS.COM

WESTCHESTER SERVICES LLC
604 FOX GLEN
BARRINGTON, IL 60010
PHONE: 847-277-0070
AE@Westchesterservices.com

JOHN M. BANKS ARCHITECT
604 FOX GLEN
BARRINGTON, IL 60010
TELEPHONE: 847-277-0070
FAX : 847-277-0080
jbanks@westchesterservices.com

NSB
15515920/IL4218
ILL04218
525 VILLAGE CENTER DRIVE
BURR RIDGE, IL 60527

REVISIONS

REV.	DATE	DESCRIPTION	INITIALS
0	07/05/22	PERMIT/CONSTRUCTION	CG
A	06/09/22	PRELIMINARY CD	DS

NOT FOR CONSTRUCTION UNLESS LABELED AS CONSTRUCTION SET

07/05/22

STATE OF ILLINOIS JOHN M. BANKS 001-014586 LICENSED ARCHITECT

EXP. DATE: 11/30/22

"I HEREBY CERTIFY THAT THESE PLANS WERE PREPARED BY ME OR UNDER MY DIRECT SUPERVISION AND THAT I AM A DULY REGISTERED ARCHITECT UNDER THE LAWS OF THE STATE OF ILLINOIS"

SHEET TITLE
EQUIPMENT DETAILS

SHEET NUMBER
A7

THE INFORMATION CONTAINED IN THIS SET OF CONSTRUCTION DOCUMENTS IS PROPRIETARY BY NATURE. ANY USE OR DISCLOSURE OTHER THAN THAT WHICH RELATES TO CARRIER SERVICES IS STRICTLY PROHIBITED.

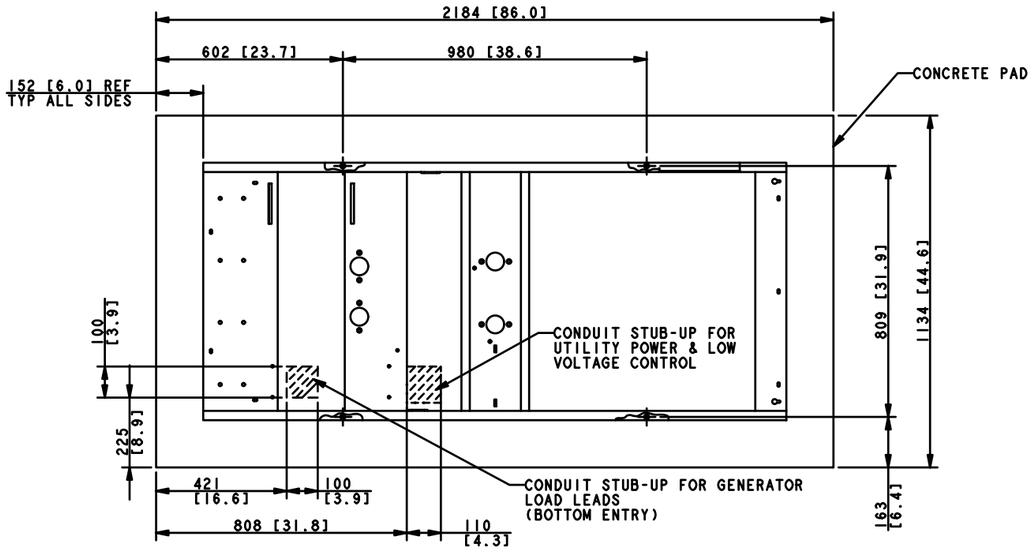

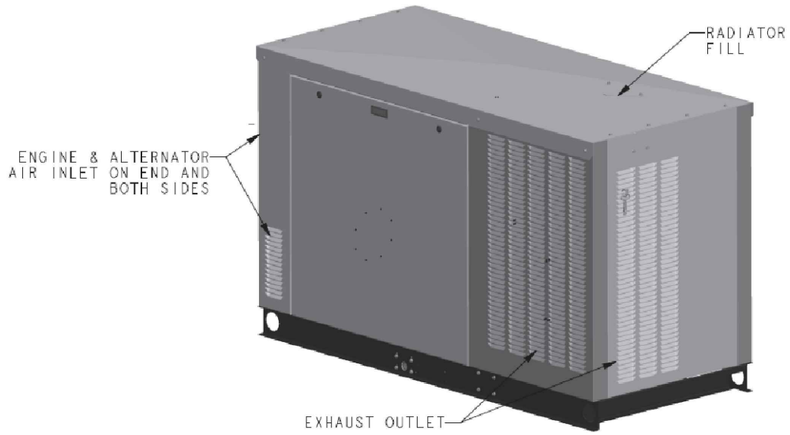

SCALE 0.1

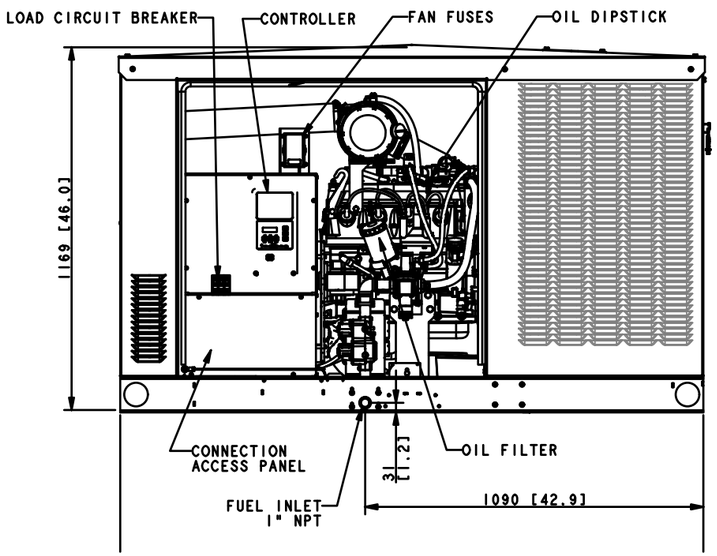

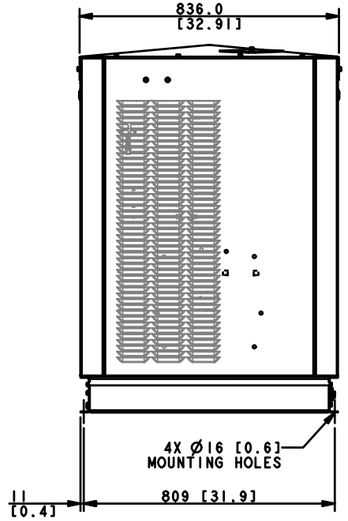

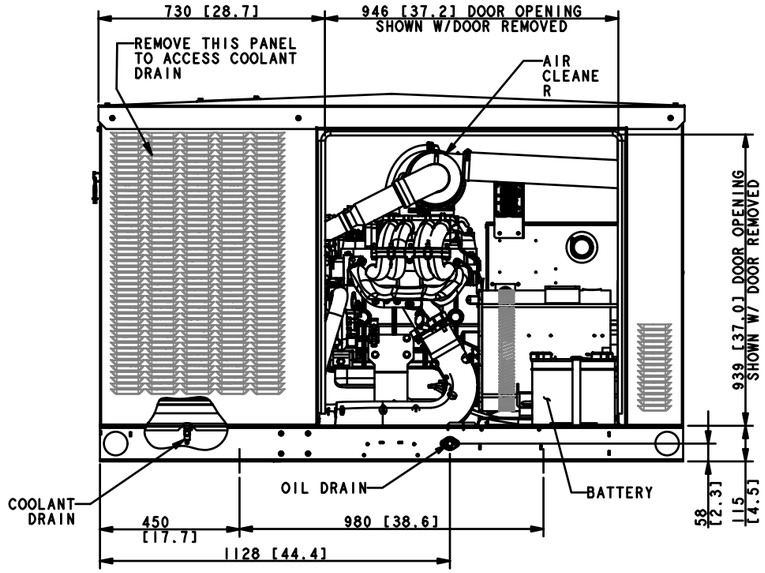

NOTE: DIMENSIONS IN [ ] ARE ENGLISH STANDARD EQUIVALENTS.

REV	DATE	OR COMPOSITE DWGS, SEE PART NO. FOR REVISION LEVEL	BY
-	10-31-13	NEW DRAWING [CT79277]	DRA
A	6-3-14	(C-8) 225 WAS 211, 100 WAS 123, (C-7) 421 WAS 392, 100 WAS 216 [CT83066]	DRA
B	6-10-15	UPDATED VIEWS TO SHOW CROSS BENT, PITCHED ROOF [CT115573]	BGP
C	2-25-19	SEE SHEET 2 [CT193814]	HM

UNLESS OTHERWISE SPECIFIED -
1) DIMENSIONS ARE IN MILLIMETERS
2) TOLERANCES ARE:
X.X ± 0.25
X.XX ± 0.13
ANGLES ± 0° 30'
SURFACE FINISH 63 MAX.
THIRD ANGLE PROJECTION

APPROVALS	DATE
DRAWN DRA	10-31-13
CHECKED GFR	10-31-13
APPROVED JJR	10-31-13

KOHLER CO. METRIC | PRO-E
POWER SYSTEMS, KOHLER, WI 53044 U.S.A.
THIS DRAWING IN DESIGN AND DETAIL IS KOHLER CO. PROPERTY AND MUST NOT BE USED EXCEPT IN CONNECTION WITH KOHLER CO. WORK. ALL RIGHTS OF DESIGN OR INVENTION ARE RESERVED.

TITLE: DIMENSION PRINT
SCALE 0.13 | CAD ID. | SHEET 1 of 2
DWG NO. ADV-9641 | D

24RCL

KOHLER 24 RCL, 60HZ, NATURAL GAS GENERATOR DETAIL

SCALE N.T.S. | 1

AT&T
930 NATIONAL PARKWAY
SCHAUMBURG, IL 60173

NEXIUS
DANIEL KALINA
SITE ACQUISITION SPECIALIST
PHONE: 630-946-7741
DANIEL.KALINA@NEXIUS.COM

WESTCHESTER SERVICES LLC
604 FOX GLEN
BARRINGTON, IL 60010
PHONE: 847-277-0070
AE@Westchesterservices.com

JOHN M. BANKS
ARCHITECT
604 FOX GLEN
BARRINGTON, IL 60010
TELEPHONE: 847-277-0070
FAX : 847-277-0080
jbanks@westchesterservices.com

NSB
15515920/IL4218
ILL04218
525 VILLAGE CENTER DRIVE
BURR RIDGE, IL 60527

REVISIONS

REV.	DATE	DESCRIPTION	INITIALS
0	07/05/22	PERMIT/CONSTRUCTION	CG
A	06/09/22	PRELIMINARY CD	DS

NOT FOR CONSTRUCTION UNLESS LABELED AS CONSTRUCTION SET

07/05/22
JOHN M. BANKS
001-014586
STATE OF ILLINOIS
LICENSED ARCHITECT
EXP. DATE 11/30/22
"I HEREBY CERTIFY THAT THESE PLANS WERE PREPARED BY ME OR UNDER MY DIRECT SUPERVISION AND THAT I AM A DULY REGISTERED ARCHITECT UNDER THE LAWS OF THE STATE OF ILLINOIS"

SHEET TITLE
EQUIPMENT DETAILS

SHEET NUMBER
A7.1

MAT18: Rubber Mats

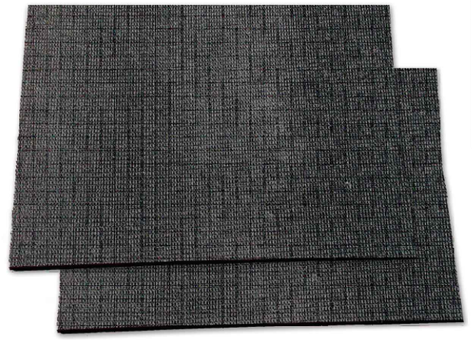

Features:

- Manufactured from UV-resistant 1/2" thick rubber
- Six mats required for use with Non-Penetrating Tripods
- Four mats required for use with Non-Penetrating Roof-Top Frames

Part #	Size
MAT18	1/2" x 18" x 48"

NOTE:
PROVIDE 20 LBS OF BALLAST FOR EVERY 10FT OF CABLE TRAY

PARTS LIST

ITE	QTY	PART NO.	PART DESCRIPTION	LENGTH	UNIT WT.	NET WT.
1	3	SLPR8	PVC ROOFTOP SLEEPER	31 7/8 in	3.03	9.10
2	6	RCCLIP	ROOFTOP COVER CLIP ANGLE		0.36	2.14
3	1	X-SP1543	8 RUN ROOFTOP COVER		75.89	75.89
4	12	G38114	3/8" x 1-1/4" HDG HEX BOLT GR5		0.06	0.75
5	18	G38FW	3/8" HDG USS FLATWASHER		0.01	0.21
6	12	G38LW	3/8" HDG LOCKWASHER		0.01	0.08
7	12	G38NUT	3/8" HDG HEAVY 2H HEX NUT		0.03	0.41
8	3	RN38	RETAINING NUT 3/8" X 1-1/4"		0.04	0.12
9	3	SS38114	SS 3/8" X 1-1/4" BOLT	1 1/4 in	0.06	0.18
10	3	SS38FW	3/8" STAINLESS FLATWASHER		0.01	0.03
					TOTAL WT. #	88.91

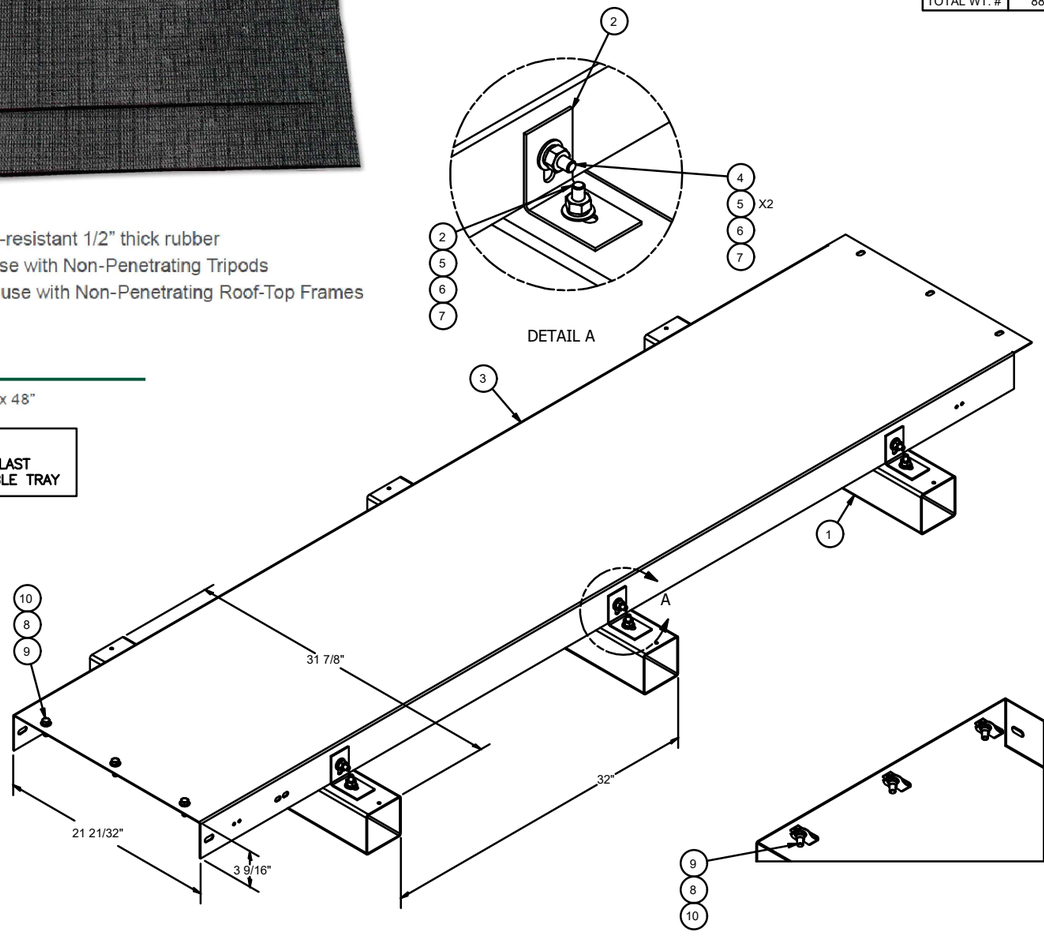

PARTS LIST

ITE	QTY	PART NO.	PART DESCRIPTION	LENGTH	UNIT WT.	NET WT.
1	2	SP1587	WALL MOUNT BRACKET FOR 8 RUNS OF COAX		4.82	9.64
2	1	X-WMC8	16 GA SHEET (FY=35 KSI MIN)		54.38	54.38
3	7	RN38	RETAINING NUT 3/8" X 1-1/4"		0.04	0.27
4	7	G38FW	3/8" HDG USS FLATWASHER		0.01	0.08
5	7	G38LW	3/8" HDG LOCKWASHER		0.01	0.05
6	7	G38114	3/8" x 1-1/4" HDG HEX BOLT GR5		0.06	0.44
					TOTAL WT. #	64.86

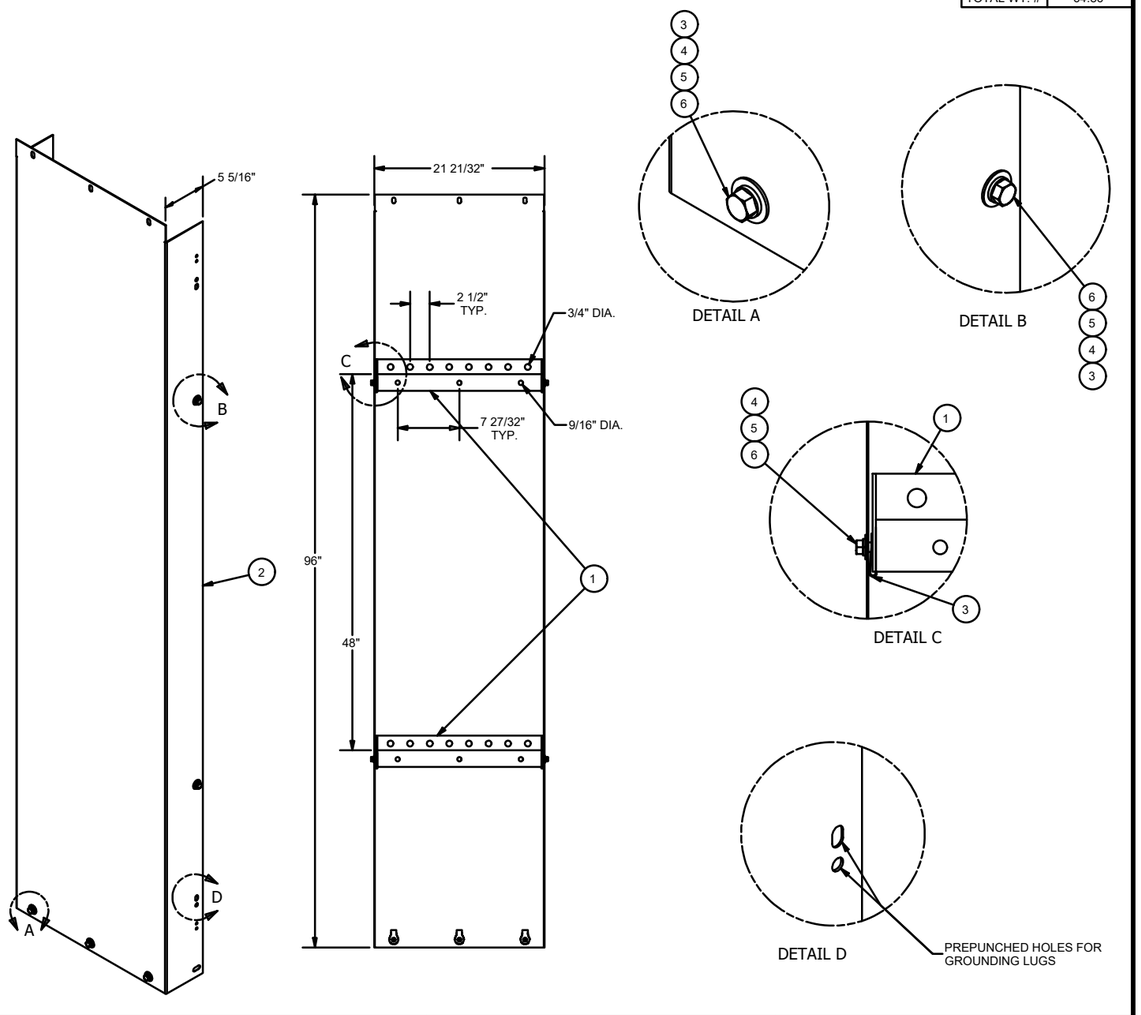

TOLERANCE NOTES

TOLERANCES ON DIMENSIONS, UNLESS OTHERWISE NOTED ARE:
SAWED, SHEARED AND GAS CUT EDGES (± 0.030")
DRILLED AND GAS CUT HOLES (± 0.030") - NO CONING OF HOLES
LASER CUT EDGES AND HOLES (± 0.010") - NO CONING OF HOLES
BENDS ARE ± 1/2 DEGREE
ALL OTHER MACHINING (± 0.030")
ALL OTHER ASSEMBLY (± 0.060")

PROPRIETARY NOTE:
THE DATA AND TECHNIQUES CONTAINED IN THIS DRAWING ARE PROPRIETARY INFORMATION OF VALMONT INDUSTRIES AND CONSIDERED A TRADE SECRET. ANY USE OR DISCLOSURE WITHOUT THE CONSENT OF VALMONT INDUSTRIES IS STRICTLY PROHIBITED.

DESCRIPTION: ROOFTOP COAX KITS FOR 8 RUNS OF COAX

SITE PRO 1 — A valmont COMPANY
Engineering Support Team: 1-888-753-7446
Locations: New York, NY; Atlanta, GA; Los Angeles, CA; Plymouth, IN; Salem, OR; Dallas, TX

CPD NO.	DRAWN BY	ENG. APPROVAL	PART NO.	PAGE
ile0	CEK 8/30/2011		SP1543	1 OF 1
CLASS SUB	DRAWING USAGE	CHECKED BY	DWG. NO.	
81 01	CUSTOMER	BMC 9/2/2011	SP1543	

HORIZONTAL ROOFTOP CABLE TRAY DETAIL

SCALE: N.T.S. — 2

TOLERANCE NOTES

TOLERANCES ON DIMENSIONS, UNLESS OTHERWISE NOTED ARE:
SAWED, SHEARED AND GAS CUT EDGES (± 0.030")
DRILLED AND GAS CUT HOLES (± 0.030") - NO CONING OF HOLES
LASER CUT EDGES AND HOLES (± 0.010") - NO CONING OF HOLES
BENDS ARE ± 1/2 DEGREE
ALL OTHER MACHINING (± 0.030")
ALL OTHER ASSEMBLY (± 0.060")

PROPRIETARY NOTE:
THE DATA AND TECHNIQUES CONTAINED IN THIS DRAWING ARE PROPRIETARY INFORMATION OF VALMONT INDUSTRIES AND CONSIDERED A TRADE SECRET. ANY USE OR DISCLOSURE WITHOUT THE CONSENT OF VALMONT INDUSTRIES IS STRICTLY PROHIBITED.

DESCRIPTION: WALL MOUNT COVERED COAX KIT 8 RUNS

SITE PRO 1 — A valmont COMPANY
Engineering Support Team: 1-888-753-7446
Locations: New York, NY; Atlanta, GA; Los Angeles, CA; Plymouth, IN; Salem, OR; Dallas, TX

CPD NO.	DRAWN BY	ENG. APPROVAL	PART NO.	PAGE
ile0	CEK 8/31/2011		WMC8	1 OF 1
CLASS SUB	DRAWING USAGE	CHECKED BY	DWG. NO.	
81 01	CUSTOMER	BMC 9/6/2011	WMC8	

VERTICAL CABLE TRAY DETAIL

SCALE: N.T.S. — 1

THE INFORMATION CONTAINED IN THIS SET OF CONSTRUCTION DOCUMENTS IS PROPRIETARY BY NATURE. ANY USE OR DISCLOSURE OTHER THAN THAT WHICH RELATES TO CARRIER SERVICES IS STRICTLY PROHIBITED.

AT&T
930 NATIONAL PARKWAY
SCHAUMBURG, IL 60173

NEXIUS
DANIEL KALINA
SITE ACQUISITION SPECIALIST
PHONE: 630-946-7741
DANIEL.KALINA@NEXIUS.COM

WESTCHESTER SERVICES LLC
604 FOX GLEN
BARRINGTON, IL 60010
PHONE: 847-277-0070
AE@Westchesterservices.com

JOHN M. BANKS ARCHITECT
604 FOX GLEN
BARRINGTON, IL 60010
TELEPHONE: 847-277-0070
FAX : 847-277-0080
jbanks@westchesterservices.com

NSB
15515920/IL4218
ILL04218
525 VILLAGE CENTER DRIVE
BURR RIDGE, IL 60527

REVISIONS

REV.	DATE	DESCRIPTION	INITIALS
0	07/05/22	PERMIT/CONSTRUCTION	CG
A	06/09/22	PRELIMINARY CD	DS

NOT FOR CONSTRUCTION UNLESS LABELED AS CONSTRUCTION SET

07/05/22

STATE OF ILLINOIS — JOHN M. BANKS — 001-014586 — LICENSED ARCHITECT

EXP. DATE: 11/30/22

"I HEREBY CERTIFY THAT THESE PLANS WERE PREPARED BY ME OR UNDER MY DIRECT SUPERVISION AND THAT I AM A DULY REGISTERED ARCHITECT UNDER THE LAWS OF THE STATE OF ILLINOIS"

SHEET TITLE: CABLE TRAY DETAILS

SHEET NUMBER: A8

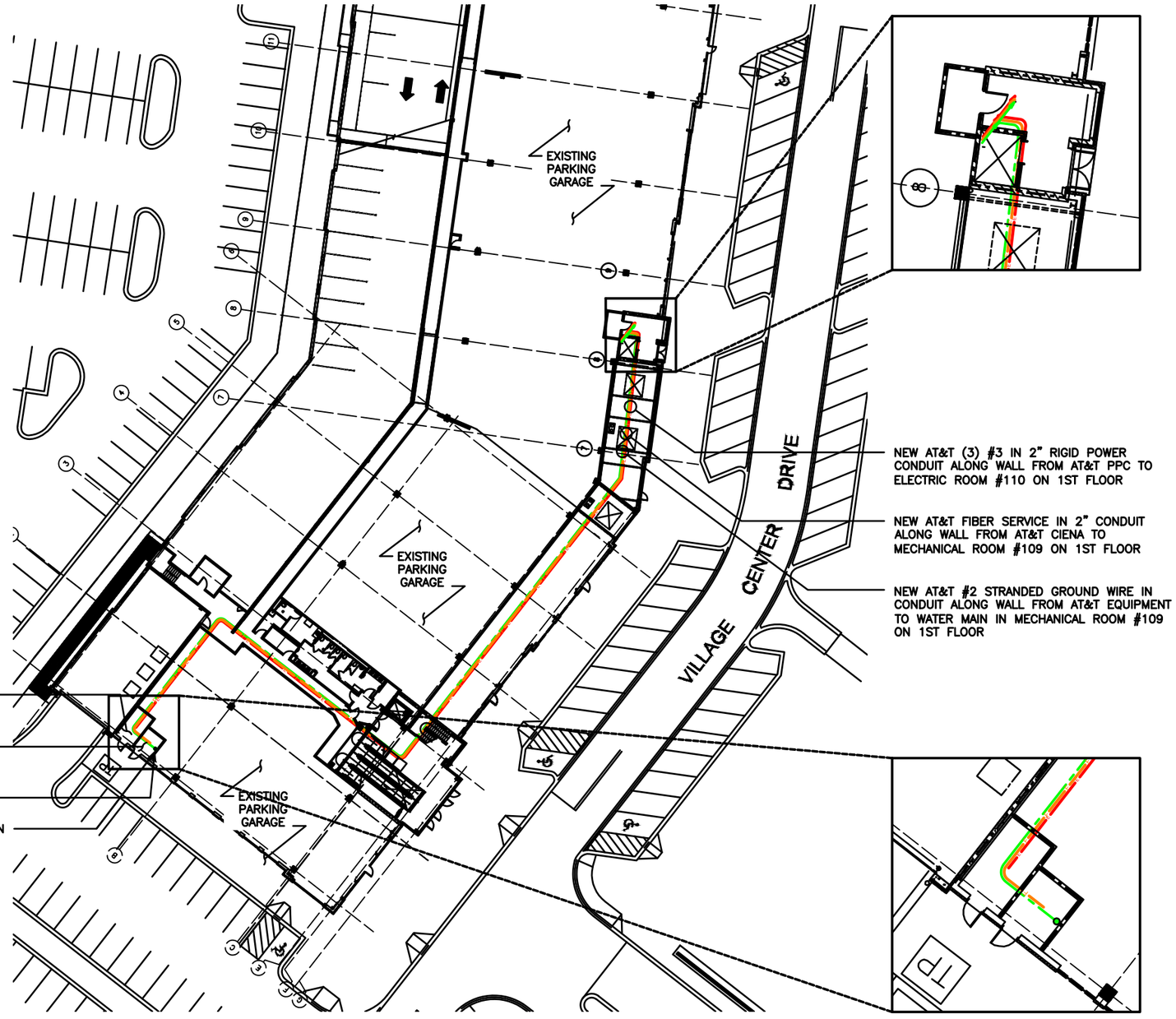

1ST FLOOR

EXISTING OVERHEAD POWER — OHP — OHP — OHP

EXISTING UNDERGROUND POWER — UGP — UGP — UGP

EXISTING OVERHEAD UTILITIES — OHU — OHU — OHU

NEW UNDERGROUND POWER — E — E — E — E — E

NEW UNDERGROUND FIBER — F — F — F — F — F — F — F

1. ALL UNDERGROUND CONDUITS SHALL BE SCH 40 PVC. EXCEPT THAT ELBOWS AND RISERS SHALL BE RMC ALL UNDERGROUND ELBOWS SHALL BE SWEEPING BENDS. 2'-0" MINIMUM SHALL BE REQUIRED.
2. THE FIBER CABLES SHOULD BE INSTALLED IN RIGID METAL CONDUIT, (10'-0") TEN FEET IN LENGTH BEFORE ENTERING A SHELTER OR BUILDING PER AT&T STANDARD ATT-TP 26416.
3. TWO CONDUITS ARE SHOWN IN DETAIL 2, ALTHOUGH MULTIPLE CONDUITS CAN BE PLACED IN THE SAME TRENCH. A MINIMUM SEPARATION IS REQUIRED PER THE LOCAL JURISDICTIONS AND UTILITY COMPANIES. IN ALL OTHER CASES, USE THE CONDUIT SPACING SCHEDULE TO MAINTAIN MINIMUM SPACING BETWEEN THE EXTERIOR WALL TO EXTERIOR WALL SEPARATION OF CONDUITS.
4. CONTRACTOR SHALL RESTORE THE TRENCH TO ITS ORIGINAL CONDITIONS BY EITHER SEEDING OR SODDING GRASS AREAS, OR REPLACING ASPHALT OR CONCRETE AREAS TO ITS ORIGINAL CROSS SECTION.
5. TRENCHING SAFETY; INCLUDING, BUT NOT LIMITED TO SOIL CLASSIFICATION, SLOPING, AND SHORING, SHALL BE GOVERNED BY THE CURRENT OSHA TRENCHING AND EXCAVATION SAFETY STANDARDS.
6. ALL CONDUITS SHALL BE INSTALLED IN COMPLIANCE WITH THE NATIONAL ELECTRIC CODE (NEC) OR AS REQUIRED BY THE LOCAL JURISDICTION.

LEGEND

SCALE N.T.S. 2

UTILITY PLAN

0 25' 50'

SCALE: 1"=50'-0" (11x17)
(OR) 2"=50'-0" (22x34)

3

SCALE N.T.S. 1

THE INFORMATION CONTAINED IN THIS SET OF CONSTRUCTION DOCUMENTS IS PROPRIETARY BY NATURE. ANY USE OR DISCLOSURE OTHER THAN THAT WHICH RELATES TO CARRIER SERVICES IS STRICTLY PROHIBITED.

AT&T
930 NATIONAL PARKWAY
SCHAUMBURG, IL 60173

NEXIUS
DANIEL KALINA
SITE ACQUISITION SPECIALIST
PHONE: 630-946-7741
DANIEL.KALINA@NEXIUS.COM

WESTCHESTER SERVICES LLC
604 FOX GLEN
BARRINGTON, IL 60010
PHONE: 847-277-0070
AE@Westchesterservices.com

JOHN M. BANKS ARCHITECT
604 FOX GLEN
BARRINGTON, IL 60010
TELEPHONE: 847-277-0070
FAX : 847-277-0080
jbanks@westchesterservices.com

NSB
15515920/IL4218
ILL04218
525 VILLAGE CENTER DRIVE
BURR RIDGE, IL 60527

REVISIONS			
REV.	DATE	DESCRIPTION	INITIALS
0	07/05/22	PERMIT/CONSTRUCTION	CG
A	06/09/22	PRELIMINARY CD	DS

NOT FOR CONSTRUCTION UNLESS LABELED AS CONSTRUCTION SET

07/05/22

STATE OF ILLINOIS
JOHN M. BANKS
001-014586
LICENSED ARCHITECT

EXP. DATE: 11/30/22

"I HEREBY CERTIFY THAT THESE PLANS WERE PREPARED BY ME OR UNDER MY DIRECT SUPERVISION AND THAT I AM A DULY REGISTERED ARCHITECT UNDER THE LAWS OF THE STATE OF ILLINOIS"

SHEET TITLE
UTILITY PLAN AND DETAILS

SHEET NUMBER
E1

THE INFORMATION CONTAINED IN THIS SET OF CONSTRUCTION DOCUMENTS IS PROPRIETARY BY NATURE. ANY USE OR DISCLOSURE OTHER THAN THAT WHICH RELATES TO CARRIER SERVICES IS STRICTLY PROHIBITED.

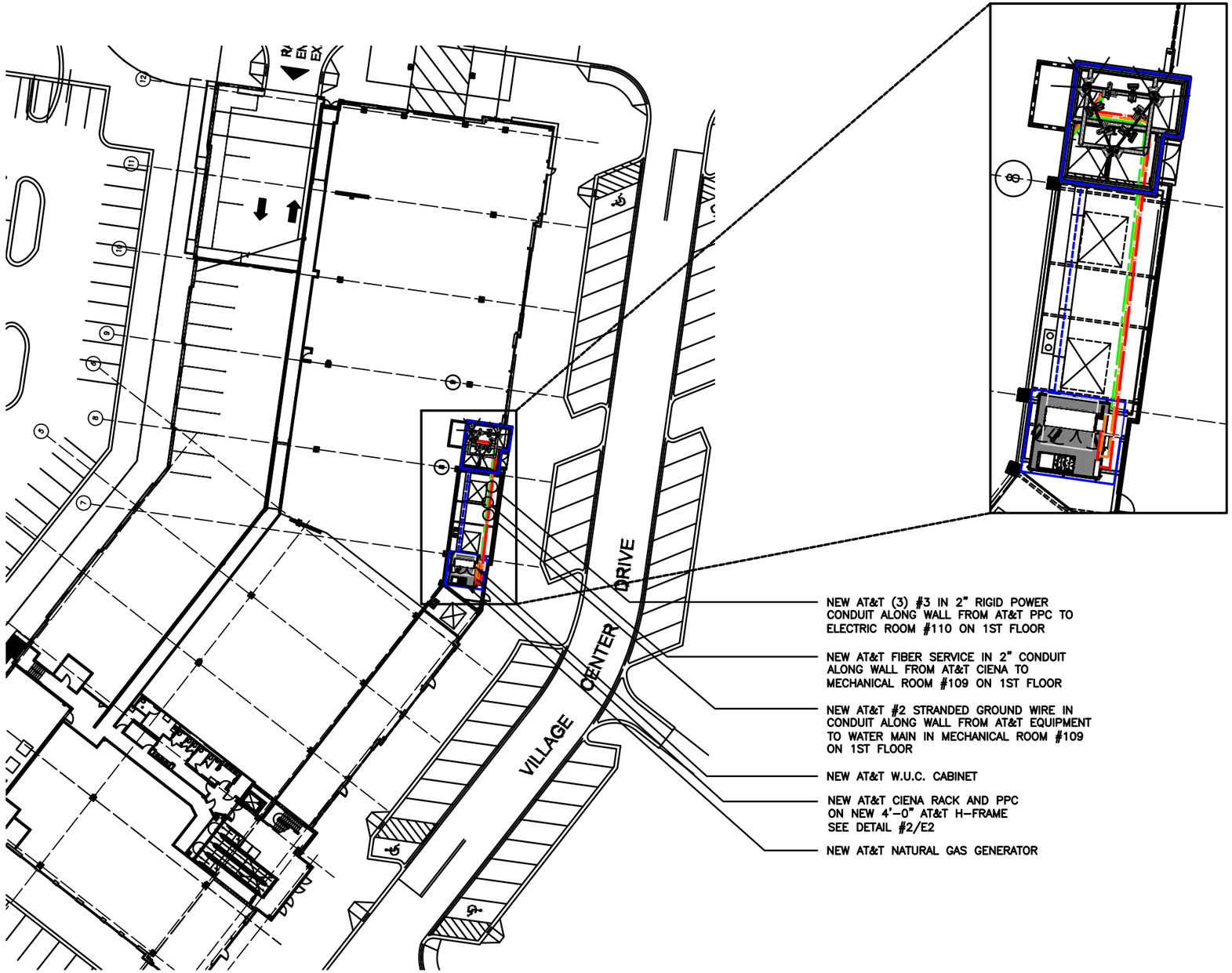

2ND FLOOR

EXISTING OVERHEAD POWER — OHP — OHP — OHP

EXISTING UNDERGROUND POWER — UGP — UGP — UGP

EXISTING OVERHEAD UTILITIES — OHU — OHU — OHU

NEW UNDERGROUND POWER — E — E — E — E — E

NEW UNDERGROUND FIBER — F — F — F — F — F — F — F

1. ALL UNDERGROUND CONDUITS SHALL BE SCH 40 PVC. EXCEPT THAT ELBOWS AND RISERS SHALL BE RMC ALL UNDERGROUND ELBOWS SHALL BE SWEEPING BENDS. 2'-0" MINIMUM SHALL BE REQUIRED.
2. THE FIBER CABLES SHOULD BE INSTALLED IN RIGID METAL CONDUIT, (10'-0") TEN FEET IN LENGTH BEFORE ENTERING A SHELTER OR BUILDING PER AT&T STANDARD ATT-TP 26416.
3. TWO CONDUITS ARE SHOWN IN DETAIL 2, ALTHOUGH MULTIPLE CONDUITS CAN BE PLACED IN THE SAME TRENCH. A MINIMUM SEPARATION IS REQUIRED PER THE LOCAL JURISDICTIONS AND UTILITY COMPANIES. IN ALL OTHER CASES, USE THE CONDUIT SPACING SCHEDULE TO MAINTAIN MINIMUM SPACING BETWEEN THE EXTERIOR WALL TO EXTERIOR WALL SEPARATION OF CONDUITS.
4. CONTRACTOR SHALL RESTORE THE TRENCH TO ITS ORIGINAL CONDITIONS BY EITHER SEEDING OR SODDING GRASS AREAS, OR REPLACING ASPHALT OR CONCRETE AREAS TO ITS ORIGINAL CROSS SECTION.
5. TRENCHING SAFETY; INCLUDING, BUT NOT LIMITED TO SOIL CLASSIFICATION, SLOPING, AND SHORING, SHALL BE GOVERNED BY THE CURRENT OSHA TRENCHING AND EXCAVATION SAFETY STANDARDS.
6. ALL CONDUITS SHALL BE INSTALLED IN COMPLIANCE WITH THE NATIONAL ELECTRIC CODE (NEC) OR AS REQUIRED BY THE LOCAL JURISDICTION.

LEGEND

SCALE N.T.S. 2

UTILITY PLAN

0 25' 50'

SCALE: 1"=50'-0" (11x17)
(OR) 2"=50'-0" (22x34)

SCALE N.T.S. 1

AT&T
930 NATIONAL PARKWAY
SCHAUMBURG, IL 60173

NEXIUS
DANIEL KALINA
SITE ACQUISITION SPECIALIST
PHONE: 630-946-7741
DANIEL.KALINA@NEXIUS.COM

WESTCHESTER SERVICES LLC
604 FOX GLEN
BARRINGTON, IL 60010
PHONE: 847-277-0070
AE@Westchesterservices.com

JOHN M. BANKS ARCHITECT
604 FOX GLEN
BARRINGTON, IL 60010
TELEPHONE: 847-277-0070
FAX : 847-277-0080
jbanks@westchesterservices.com

NSB
15515920/IL4218
ILL04218
525 VILLAGE CENTER DRIVE
BURR RIDGE, IL 60527

REVISIONS			
REV.	DATE	DESCRIPTION	INITIALS
0	07/05/22	PERMIT/CONSTRUCTION	CG
A	06/09/22	PRELIMINARY CD	DS

NOT FOR CONSTRUCTION UNLESS LABELED AS CONSTRUCTION SET

07/05/22

JOHN M. BANKS
001-014586
STATE OF ILLINOIS
LICENSED ARCHITECT

EXP. DATE: 11/30/22

"I HEREBY CERTIFY THAT THESE PLANS WERE PREPARED BY ME OR UNDER MY DIRECT SUPERVISION AND THAT I AM A DULY REGISTERED ARCHITECT UNDER THE LAWS OF THE STATE OF ILLINOIS"

SHEET TITLE
UTILITY PLAN AND DETAILS

SHEET NUMBER
E1.1

THE INFORMATION CONTAINED IN THIS SET OF CONSTRUCTION DOCUMENTS IS PROPRIETARY BY NATURE. ANY USE OR DISCLOSURE OTHER THAN THAT WHICH RELATES TO CARRIER SERVICES IS STRICTLY PROHIBITED.

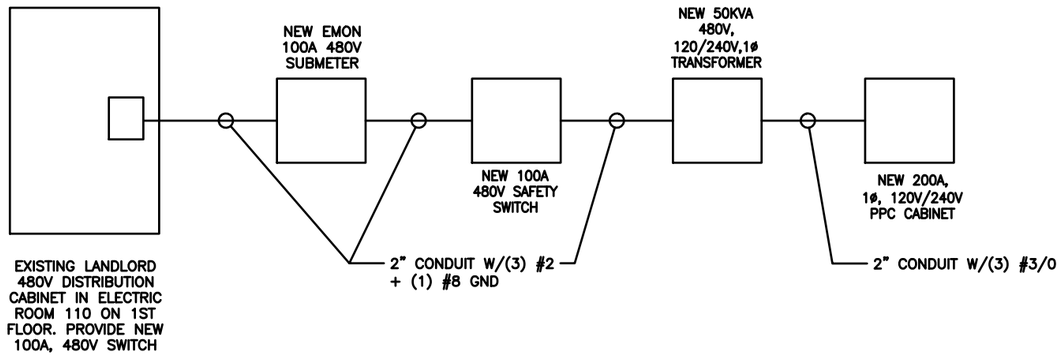

SINGLE LINE DIAGRAM

SCALE N.T.S. 2

INTEGRATED LOAD CENTER

LOAD DESCRIPTION	QTY.	UNIT V.A.	LOAD PER PHASE (VA) A	LOAD PER PHASE (VA) B	WIRE COLOR	LOADS CONTINUOUS	LOADS NON-CONTINUOUS	LOADS SUB-PANEL	WIRE SIZE	GROUNDING WIRE SIZE	TRIP	TRIP	GROUNDING WIRE SIZE	WIRE SIZE	LOADS SUB-PANEL	LOADS NON-CONTINUOUS	LOADS CONTINUOUS	WIRE COLOR	LOAD PER PHASE (VA) A	LOAD PER PHASE (VA) B	UNIT V.A.	QTY.	LOAD DESCRIPTION
1 RECTIFIER #1	1	1400	1400		BLK	X			8	(10)	40	40	(10)	8			X	BLK	1400		1400	1	RECTIFIER #5 2
3	1	1400		1400	RED													RED		1400	1400	1	4
5 RECTIFIER #2	1	1400	1400		BLK	X			8	(10)	40	40	(10)	8			X	BLK	1400		1400	1	RECTIFIER #6 6
7	1	1400		1400	RED													RED		1400	1400	1	8
9 RECTIFIER #3	1	1400	1400		BLK	X			8	(10)	40	40	(10)	8			X	BLK	1400		1400	1	RECTIFIER #7 10
12	1	1400		1400	RED													RED		1400	1400	1	12
13 RECTIFIER #4	1	1400	1400		BLK	X			8	(10)	40	40	(10)	8			X	BLK	1400		1400	1	RECTIFIER #8 14
15	1	1400		1400	RED													RED		1400	1400	1	16
17					BLK													BLK					18
19					RED	X			12	12	20							RED					20
21 GFCI RECEPTACLES	2	180	360		BLK	X			12	(12)	20							BLK					22
23 OPTIONAL FIBER BOX RECEPTACLE	1	180		180	RED	X			12	12	20							RED					24
25 BATTERY CHARGER	1	240	240		BLK	X			12	12	20							BLK					26
27 BLOCK HEATER	1	1500		1500	RED	X			12	12	20							RED					28
29 OIL HEATER	1	180	180		BLK	X			12	12	20							BLK					30
	SUBTOTAL CONTINUOUS		6,380	7,280															5,600	5,600	SUBTOTAL CONTINUOUS		TOTAL KVA CONTINUOUS x 1.25 31.075
	SUBTOTAL NON-CONTINUOUS		–	–															–	–	SUBTOTAL NON-CONTINUOUS		TOTAL KVA NON-CONTINUOUS –
	SUBTOTAL SUB-PANEL		–	–															–	–	SUBTOTAL SUB-PANEL		TOTAL KVA SUB-PANEL –

PANEL DESIGNATION:ELECTRICAL PANEL (ITEM 2)

MAIN LUGS:N/A | MAIN BREAKER:200 AMP | BRANCH BREAKER TYPESIEMENS – BL | TOTAL KVA 31.075

VOLTAGE: 120/240 | CYCLE: 60 | PHASE: 1 | WIRES: 3 | MAIN COPPER BUS: 200 AMPS | NEUTRAL:200 AMPS | TOTAL AMPS 129.48

PANEL SCHEDULE

SCALE N.T.S. 2

NOT USED

SCALE N.T.S. 1

AT&T
930 NATIONAL PARKWAY
SCHAUMBURG, IL 60173

NEXIUS
DANIEL KALINA
SITE ACQUISITION SPECIALIST
PHONE: 630-946-7741
DANIEL.KALINA@NEXIUS.COM

WESTCHESTER SERVICES LLC
604 FOX GLEN
BARRINGTON, IL 60010
PHONE: 847-277-0070
AE@Westchesterservices.com

JOHN M. BANKS
ARCHITECT
604 FOX GLEN
BARRINGTON, IL 60010
TELEPHONE: 847-277-0070
FAX : 847-277-0080
jbanks@westchesterservices.com

NSB
15515920/IL4218
ILL04218
525 VILLAGE CENTER DRIVE
BURR RIDGE, IL 60527

REVISIONS

REV.	DATE	DESCRIPTION	INITIALS
0	07/05/22	PERMIT/CONSTRUCTION	CG
A	06/09/22	PRELIMINARY CD	DS

NOT FOR CONSTRUCTION UNLESS LABELED AS CONSTRUCTION SET

07/05/22

STATE OF ILLINOIS JOHN M. BANKS 001-014586 LICENSED ARCHITECT

EXP. DATE: 11/30/22

"I HEREBY CERTIFY THAT THESE PLANS WERE PREPARED BY ME OR UNDER MY DIRECT SUPERVISION AND THAT I AM A DULY REGISTERED ARCHITECT UNDER THE LAWS OF THE STATE OF ILLINOIS"

SHEET TITLE
ELECTRICAL PANEL SCHEDULE

SHEET NUMBER
E2

THE INFORMATION CONTAINED IN THIS SET OF CONSTRUCTION DOCUMENTS IS PROPRIETARY BY NATURE. ANY USE OR DISCLOSURE OTHER THAN THAT WHICH RELATES TO CARRIER SERVICES IS STRICTLY PROHIBITED.

GROUNDING LEGEND

■	EXOTHERMIC WELD CONNECTION
●	COMPRESSION FITTING CONNECTION
□	MECHANICAL CONNECTION
⊙	5/8"X10' COPPER–CLAD STEEL GROUND ROD
⊗	5/8"X10' COPPER–CLAD STEEL GROUND ROD WITH INSPECTION WELL
———	PROPOSED GROUND WIRING
———	EXISTING GROUND WIRING
▭	TINNED COPPER GROUND BAR 1/4"X4"X12" OR 1/4"X4"X20"
CGB	COLLECTOR GROUND BAR
MGB	MAIN GROUND BAR

NOT USED

SCALE N.T.S. 2

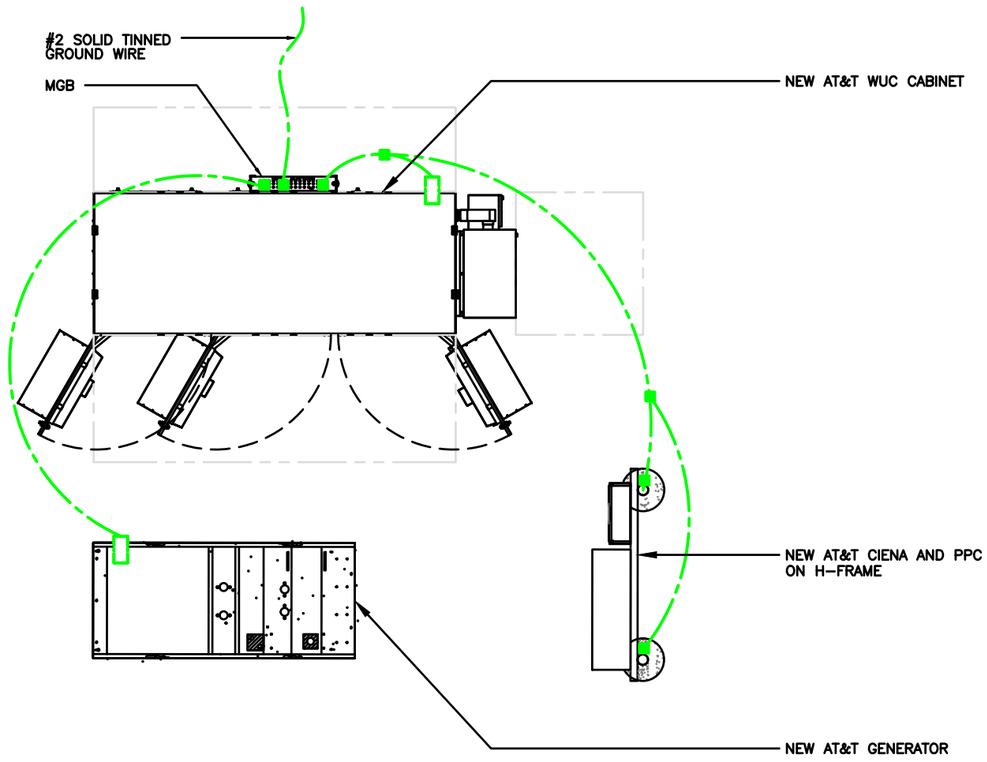

NOT USED

SCALE N.T.S. 1

AT&T
930 NATIONAL PARKWAY
SCHAUMBURG, IL 60173

NEXIUS
DANIEL KALINA
SITE ACQUISITION SPECIALIST
PHONE: 630-946-7741
DANIEL.KALINA@NEXIUS.COM

WESTCHESTER SERVICES LLC
604 FOX GLEN
BARRINGTON, IL 60010
PHONE: 847–277–0070
AE@Westchesterservices.com

JOHN M. BANKS
ARCHITECT
604 FOX GLEN
BARRINGTON, IL 60010
TELEPHONE: 847–277–0070
FAX : 847–277–0080
jbanks@westchesterservices.com

NSB
15515920/IL4218
ILL04218
525 VILLAGE CENTER DRIVE
BURR RIDGE, IL 60527

REVISIONS

REV.	DATE	DESCRIPTION	INITIALS
0	07/05/22	PERMIT/CONSTRUCTION	CG
A	06/09/22	PRELIMINARY CD	DS

NOT FOR CONSTRUCTION UNLESS LABELED AS CONSTRUCTION SET

07/05/22

STATE OF ILLINOIS JOHN M. BANKS 001-014586 LICENSED ARCHITECT

EXP. DATE: 11/30/22

"I HEREBY CERTIFY THAT THESE PLANS WERE PREPARED BY ME OR UNDER MY DIRECT SUPERVISION AND THAT I AM A DULY REGISTERED ARCHITECT UNDER THE LAWS OF THE STATE OF ILLINOIS"

SHEET TITLE
FIBER & GROUNDING RISER DIAGRAM

SHEET NUMBER
E3

THE INFORMATION CONTAINED IN THIS SET OF CONSTRUCTION DOCUMENTS IS PROPRIETARY BY NATURE. ANY USE OR DISCLOSURE OTHER THAN THAT WHICH RELATES TO CARRIER SERVICES IS STRICTLY PROHIBITED.

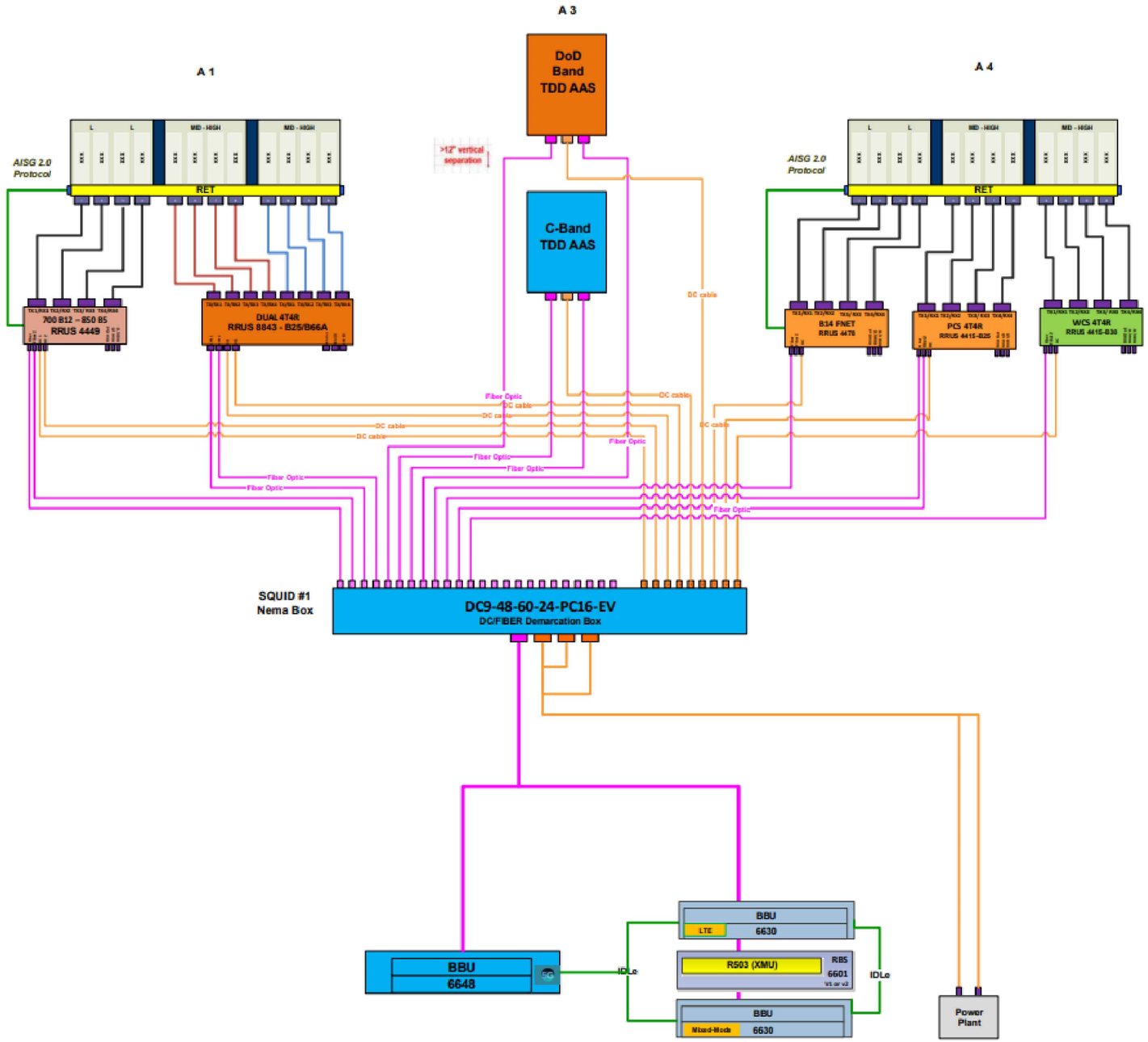

GENERIC ANTENNA CABLING SINGLE LINE DIAGRAM

SCALE N.T.S.

3

NOT USED

SCALE N.T.S.

1

NOT USED

SCALE N.T.S.

2

AT&T
930 NATIONAL PARKWAY
SCHAUMBURG, IL 60173

NEXIUS
DANIEL KALINA
SITE ACQUISITION SPECIALIST
PHONE: 630-946-7741
DANIEL.KALINA@NEXIUS.COM

WESTCHESTER SERVICES LLC
604 FOX GLEN
BARRINGTON, IL 60010
PHONE: 847-277-0070
AE@Westchesterservices.com

JOHN M. BANKS
ARCHITECT
604 FOX GLEN
BARRINGTON, IL 60010
TELEPHONE: 847-277-0070
FAX : 847-277-0080
jbanks@westchesterservices.com

NSB
15515920/IL4218
ILL04218
525 VILLAGE CENTER DRIVE
BURR RIDGE, IL 60527

REVISIONS

REV.	DATE	DESCRIPTION	INITIALS
0	07/05/22	PERMIT/CONSTRUCTION	CG
A	06/09/22	PRELIMINARY CD	DS

NOT FOR CONSTRUCTION UNLESS LABELED AS CONSTRUCTION SET

07/05/22

JOHN M. BANKS
001-014586
LICENSED ARCHITECT
STATE OF ILLINOIS

EXP. DATE: 11/30/22

"I HEREBY CERTIFY THAT THESE PLANS WERE PREPARED BY ME OR UNDER MY DIRECT SUPERVISION AND THAT I AM A DULY REGISTERED ARCHITECT UNDER THE LAWS OF THE STATE OF ILLINOIS"

SHEET TITLE
GENERIC ANTENNA CABLING DIAGRAM

SHEET NUMBER
E4

THE INFORMATION CONTAINED IN THIS SET OF CONSTRUCTION DOCUMENTS IS PROPRIETARY BY NATURE. ANY USE OR DISCLOSURE OTHER THAN THAT WHICH RELATES TO CARRIER SERVICES IS STRICTLY PROHIBITED.

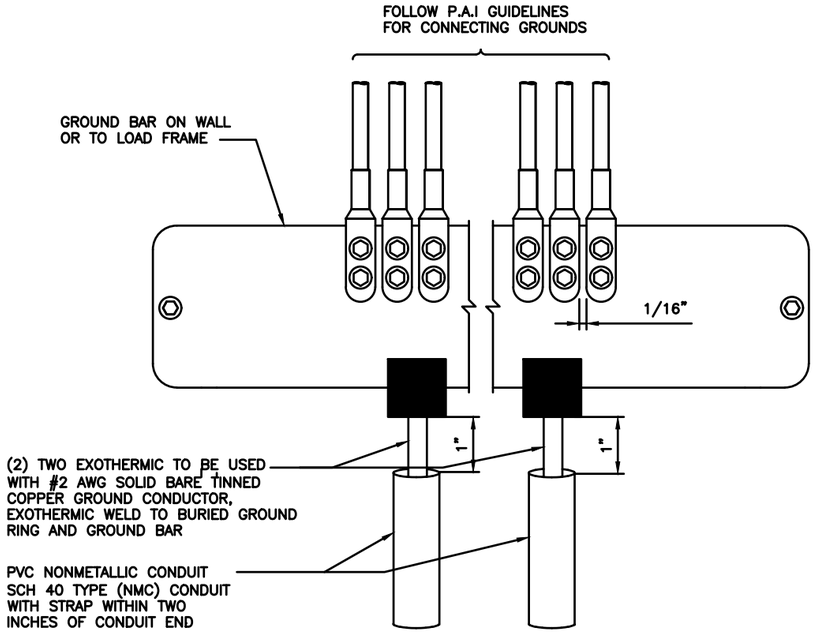

MAIN GROUND BAR DETAIL

SCALE N.T.S. | 5

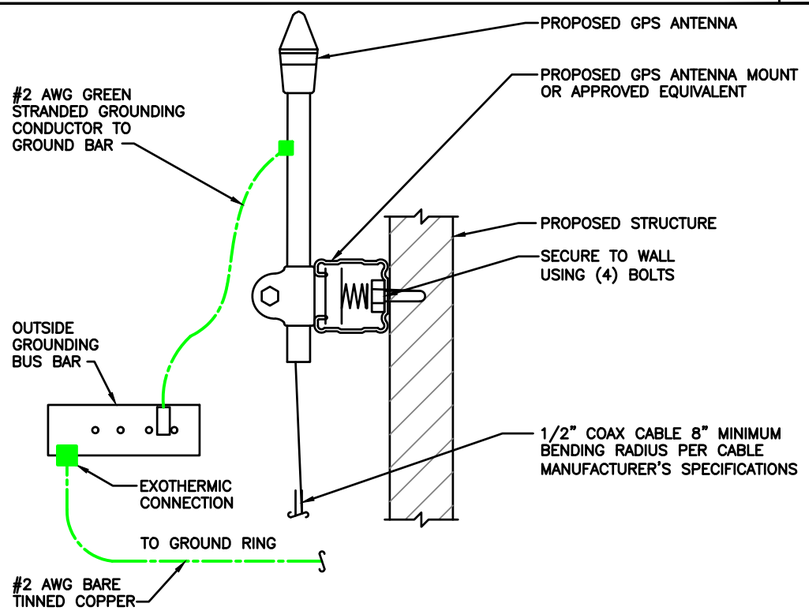

GPS ANTENNA GROUNDING

SCALE N.T.S. | 4

NO	REQUIRED	PART NUMBER	DESCRIPTION
1	1	1/4"x4"x12'	SOLID GROUND BAR
2	2	A–6056	WALL MOUNTING BRACKET
3	2	3061–4	INSULATORS
4	4	3012–1	5/8"–11x1" H.H.C.S.
5	4	3015–8	5/8" LOCKWASHER

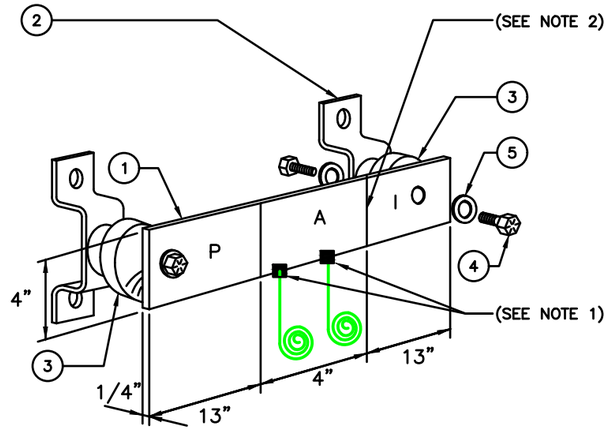

MASTER GROUND BAR DETAIL

SCALE N.T.S. | 2

EACH GROUND CONDUCTOR TERMINATING ON ANY GROUND BAR SHALL HAVE AN IDENTIFICATION TAG ATTACHED AT EACH END THAT WILL IDENTIFY ITS ORIGIN AND DESTINATION

SECTION "P" – SURGE PROTECTORS

(EC) CELL REFERENCE GROUND BAR (IF COLLOCATED)
(EC) GENERATOR FRAMEWORK (IF AVAILABLE) (#2 AWG)
(EC) TELCO GROUND BAR (#2 AWG)
(EC) COMMERCIAL POWER COMMON NEUTRAL/GROUND BOND (3/0)
(EC) FIBER GROUND BAR (#2 AWG)
(EC) POWER ROOM REFERENCE GROUND BAR (#2 AWG)
(AT&T) RECTIFIER FRAMES

SECTION "A" – SURGE ABSORBERS

(EC) INTERIOR GROUND RING (#2 AWG)
(EC) EXTERNAL EARTH GROUND FIELD (BURIED GROUND RING) (#2 AWG)
(EC) METALLIC COLD WATER PIPE (IF AVAILABLE) (1/0 AWG)
(EC) BUILDING STEEL (IF AVAILABLE) (1/0 AWG)

SECTION "I" – ISOLATED GROUND ZONE

(AT&T) ALL ISOLATED GROUND REFERENCE
(AT&T) GROUND WINDOW BAR

DETAIL NOTES:

1. EXOTHERMICALLY WELD #2 AWG BARE TINNED SOLID COPPER CONDUCTOR TO GROUND BAR. ROUTE CONDUCTOR TO BURIED GROUND RING AND PROVIDE PARALLEL EXOTHERMIC WELD.
2. THE INSTALLER SHALL USE PERMANENT MARKER TO DRAW THE LIKE BETWEEN SECTION AND LABEL EACH SECTION ("P", "A", "I" WITH 1" HIGH LETTERS

STAINLESS STEEL 3/8" ANGLE ADAPTER
SITEPRO 1 P/N: ADAP

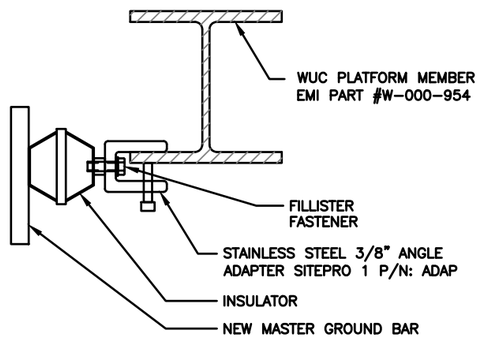

ANGLE ADAPTER DETAIL

SCALE N.T.S. | 3

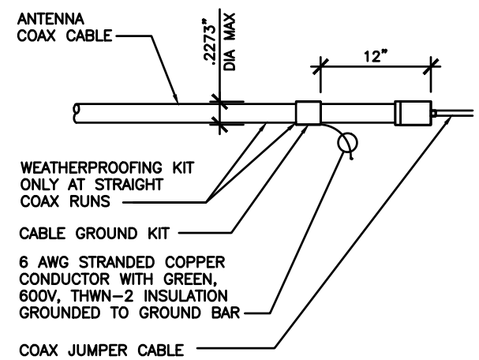

COAX GROUND KIT DETAIL

SCALE N.T.S. | 1

AT&T
930 NATIONAL PARKWAY
SCHAUMBURG, IL 60173

NEXIUS
DANIEL KALINA
SITE ACQUISITION SPECIALIST
PHONE: 630-946-7741
DANIEL.KALINA@NEXIUS.COM

WESTCHESTER SERVICES LLC
604 FOX GLEN
BARRINGTON, IL 60010
PHONE: 847–277–0070
AE@Westchesterservices.com

JOHN M. BANKS ARCHITECT
604 FOX GLEN
BARRINGTON, IL 60010
TELEPHONE: 847–277–0070
FAX : 847–277–0080
jbanks@westchesterservices.com

NSB
15515920/IL4218
ILL04218
525 VILLAGE CENTER DRIVE
BURR RIDGE, IL 60527

REVISIONS

REV.	DATE	DESCRIPTION	INITIALS
0	07/05/22	PERMIT/CONSTRUCTION	CG
A	06/09/22	PRELIMINARY CD	DS

NOT FOR CONSTRUCTION UNLESS LABELED AS CONSTRUCTION SET

07/05/22
JOHN M. BANKS
001-014586
EXP. DATE 11/30/22
"I HEREBY CERTIFY THAT THESE PLANS WERE PREPARED BY ME OR UNDER MY DIRECT SUPERVISION AND THAT I AM A DULY REGISTERED ARCHITECT UNDER THE LAWS OF THE STATE OF ILLINOIS"

SHEET TITLE
GROUNDING DETAILS

SHEET NUMBER
E5

THE INFORMATION CONTAINED IN THIS SET OF CONSTRUCTION DOCUMENTS IS PROPRIETARY BY NATURE. ANY USE OR DISCLOSURE OTHER THAN THAT WHICH RELATES TO CARRIER SERVICES IS STRICTLY PROHIBITED.

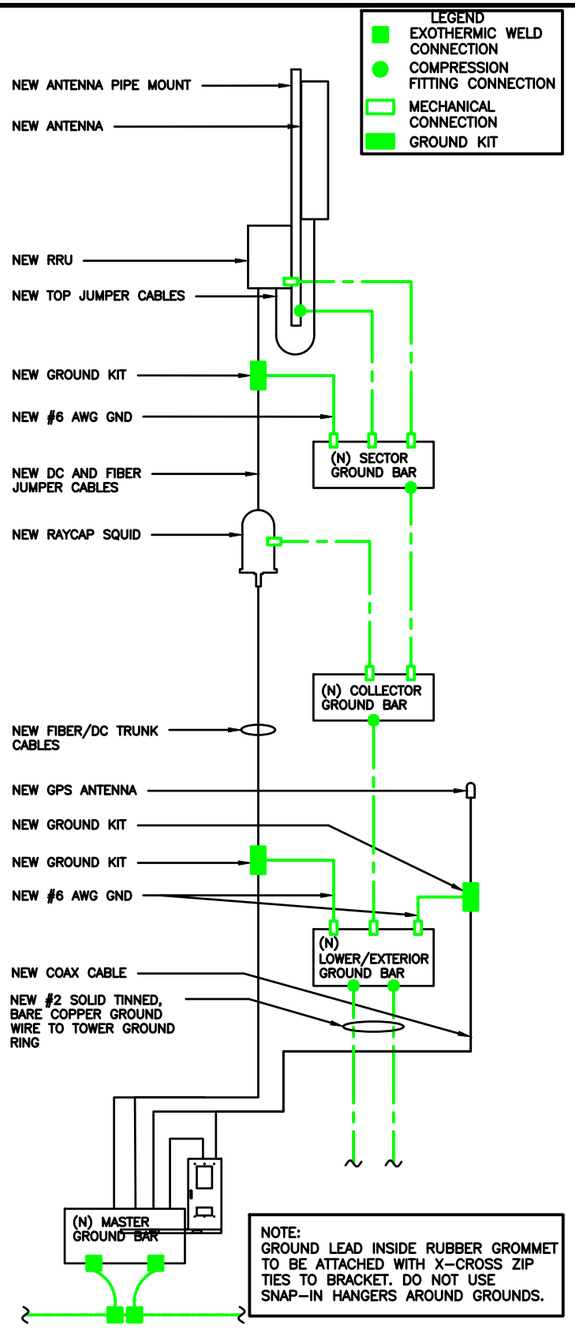

CABLE GROUNDING — SCALE N.T.S. — 4

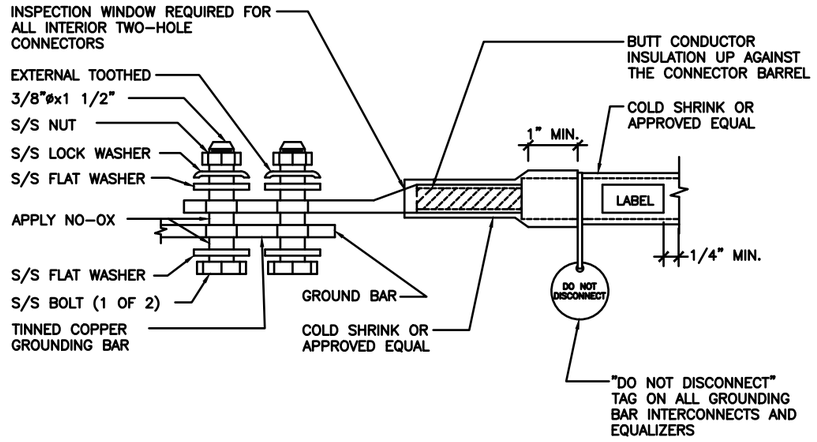

EXTERIOR TWO HOLE LUG DETAIL — SCALE N.T.S. — 3

NOT USED — SCALE N.T.S. — 2

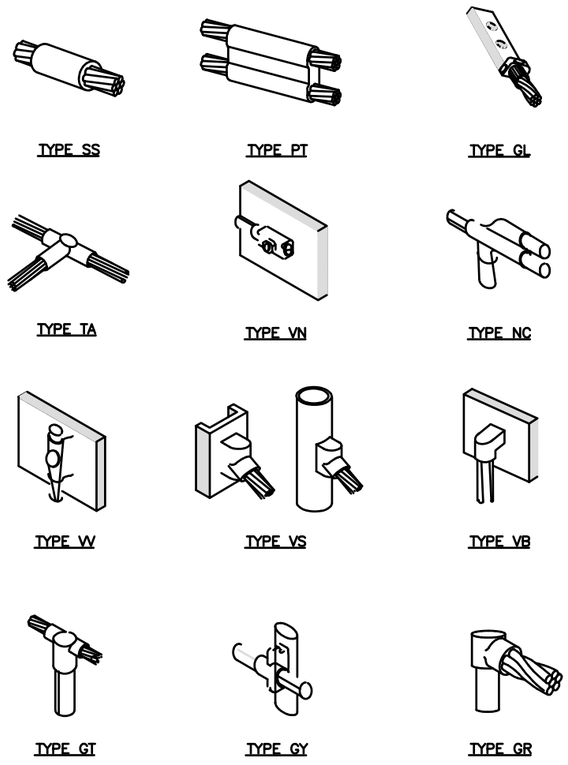

EXOTHERMIC WELD DETAILS — SCALE N.T.S. — 1

AT&T
930 NATIONAL PARKWAY
SCHAUMBURG, IL 60173

NEXIUS
DANIEL KALINA
SITE ACQUISITION SPECIALIST
PHONE: 630-946-7741
DANIEL.KALINA@NEXIUS.COM

WESTCHESTER SERVICES LLC
604 FOX GLEN
BARRINGTON, IL 60010
PHONE: 847-277-0070
AE@Westchesterservices.com

JOHN M. BANKS ARCHITECT
604 FOX GLEN
BARRINGTON, IL 60010
TELEPHONE: 847-277-0070
FAX : 847-277-0080
jbanks@westchesterservices.com

NSB
15515920/IL4218
ILL04218
525 VILLAGE CENTER DRIVE
BURR RIDGE, IL 60527

REVISIONS

REV.	DATE	DESCRIPTION	INITIALS
0	07/05/22	PERMIT/CONSTRUCTION	CG
A	06/09/22	PRELIMINARY CD	DS

NOT FOR CONSTRUCTION UNLESS LABELED AS CONSTRUCTION SET

07/05/22
JOHN M. BANKS
001-014586
EXP. DATE 11/30/22
"I HEREBY CERTIFY THAT THESE PLANS WERE PREPARED BY ME OR UNDER MY DIRECT SUPERVISION AND THAT I AM A DULY REGISTERED ARCHITECT UNDER THE LAWS OF THE STATE OF ILLINOIS"

SHEET TITLE: GROUNDING DETAILS

SHEET NUMBER: E6

THE INFORMATION CONTAINED IN THIS SET OF CONSTRUCTION DOCUMENTS IS PROPRIETARY BY NATURE. ANY USE OR DISCLOSURE OTHER THAN THAT WHICH RELATES TO CARRIER SERVICES IS STRICTLY PROHIBITED.

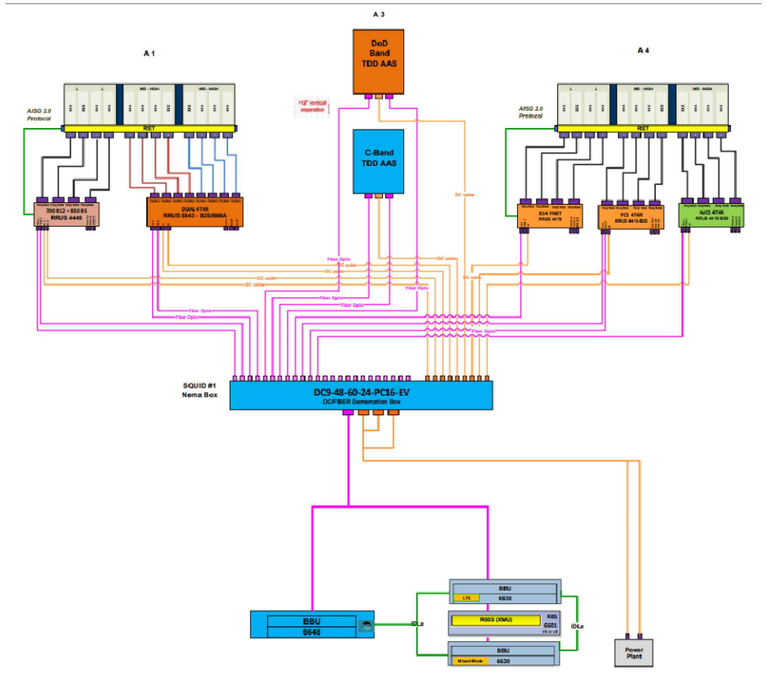

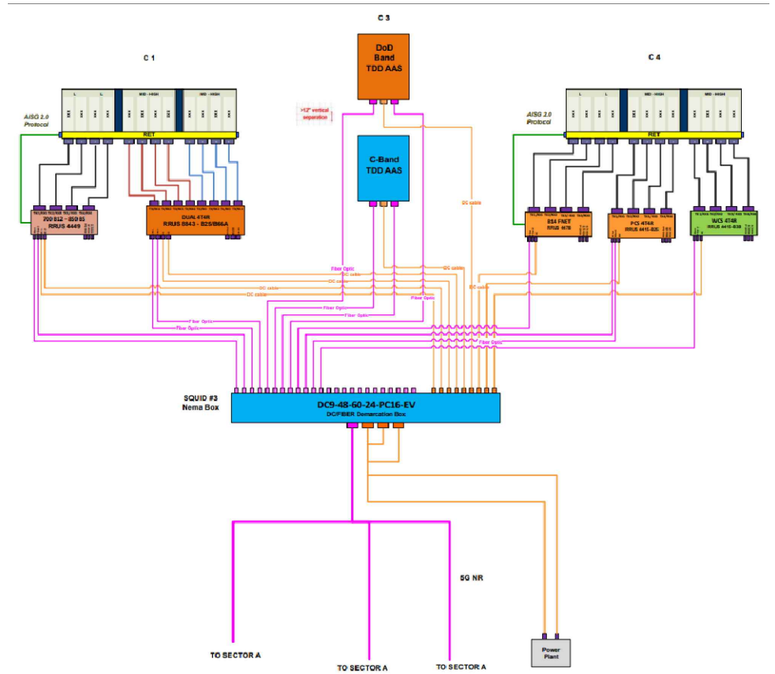

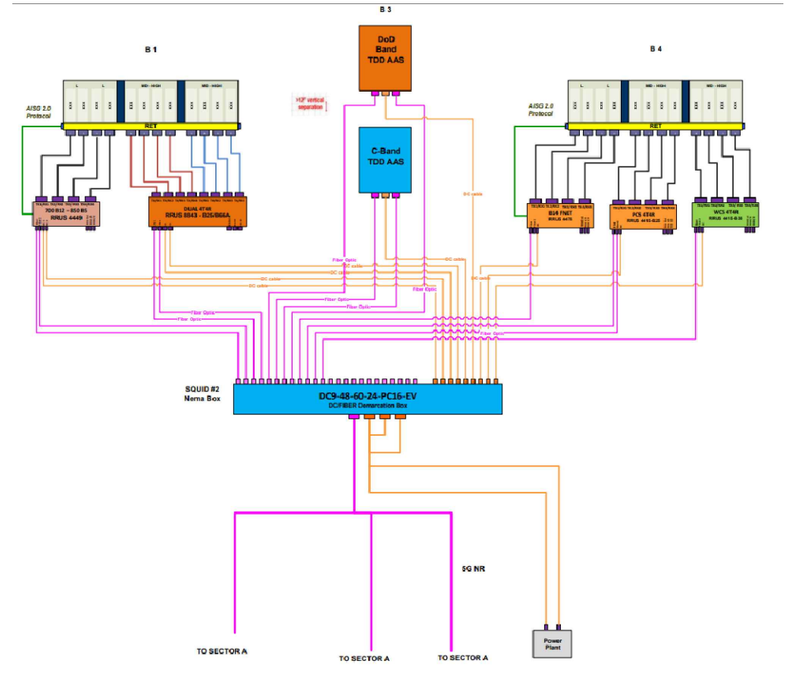

AT&T
930 NATIONAL PARKWAY
SCHAUMBURG, IL 60173

NEXIUS
DANIEL KALINA
SITE ACQUISITION SPECIALIST
PHONE: 630-946-7741
DANIEL.KALINA@NEXIUS.COM

WESTCHESTER SERVICES LLC
604 FOX GLEN
BARRINGTON, IL 60010
PHONE: 847-277-0070
AE@Westchesterservices.com

JOHN M. BANKS
ARCHITECT
604 FOX GLEN
BARRINGTON, IL 60010
TELEPHONE: 847-277-0070
FAX : 847-277-0080
jbanks@westchesterservices.com

NSB
15515920/IL4218
ILL04218
525 VILLAGE CENTER DRIVE
BURR RIDGE, IL 60527

REVISIONS

REV.	DATE	DESCRIPTION	INITIALS
0	07/05/22	PERMIT/CONSTRUCTION	CG
A	06/09/22	PRELIMINARY CD	DS

NOT FOR CONSTRUCTION UNLESS LABELED AS CONSTRUCTION SET

07/05/22

STATE OF ILLINOIS
JOHN M. BANKS
001-014586
LICENSED ARCHITECT

EXP. DATE: 11/30/22

"I HEREBY CERTIFY THAT THESE PLANS WERE PREPARED BY ME OR UNDER MY DIRECT SUPERVISION AND THAT I AM A DULY REGISTERED ARCHITECT UNDER THE LAWS OF THE STATE OF ILLINOIS"

SHEET TITLE

LEGEND AND DETAILS

SHEET NUMBER

RF

THE INFORMATION CONTAINED IN THIS SET OF CONSTRUCTION DOCUMENTS IS PROPRIETARY BY NATURE. ANY USE OR DISCLOSURE OTHER THAN THAT WHICH RELATES TO CARRIER SERVICES IS STRICTLY PROHIBITED.

NOTICE

Beyond This Point you are entering a controlled area where RF emissions *may exceed* the FCC General Population Exposure Limits.

Follow all posted signs and site guidelines for working in a RF environment.

at&t

Ref: 47CFR 1.1307(b)

CAUTION

Beyond This Point you are entering a controlled area where RF emissions *may exceed* the FCC Occupational Exposure Limits.

Obey all posted signs and site guidelines for working in a RF environment.

at&t

Ref: 47CFR 1.1307(b)

ALERTING SIGNS

WARNING!

DANGER DO NOT TOUCH TOWER!

SERIOUS "RF" BURN HAZARD!

MAINTAIN AN ADEQUATE CLEARANCE BETWEEN TOWER SUPPORTS AND GUY WIRES

FAILURE TO OBEY ALL POSTED SIGNS AND SITE GUIDELINES FOR WORKING IN A RADIO FREQUENCY ENVIRONMENT COULD RESULT IN SERIOUS INJURY. CONTACT CURRENT MAY EXCEED LIMITS PRESCRIBED IN ANSI/EEE C95.1-1992 FOR CONTROLLED ENVIRONMENTS.

at&t

ALERTING SIGN

PROPERTY OF AT&T

at&t

AUTHORIZED PERSONNEL ONLY

IN CASE OF EMERGENCY, OR PRIOR TO PERFORMING MAINTENANCE ON THIS SITE, CALL 800-638-2822 AND REFERENCE CELL SITE NUMBER_____

INFO SIGN #4

INFORMATION

AT&T operates telecommunications antennas at this location. Remain at least 3 feet away from any antenna and obey all posted signs.

Contact the owner(s) of the antenna(s) before working closer than 3 feet from the antenna.

Contact AT&T at _____ prior to performing any maintenance or repairs near AT&T antennas. This is Site#_____

Contact the management office if this door/hatch/gate is found unlocked.

INFORMACION

En esta propiedad se ubican antenas de telecomunicationes operadas por AT&T. Favor mantener una distancia de no menos de 3 pies y obedecer todos los avisos.

Comuniquese con el propictario o los propicatarios de las antenas antes de trabajar o caminar a una distancia de menos de 3 pies de la antena.

Comuniquese con AT&T _____ antes de realizar cualquier mantenimiento o reparaciones cerca de la antenas de AT&T.

Esta es la estacion base numero_____

Favor comunicarse con la oficina de la administracion del edificio si esta puerta o compuerta se encuentra sin candado.

at&t

INFO SIGN #1

NOTICE

GUIDELINES FOR WORKING IN RADIOFREQUENCY ENVIRONMENTS

- All personnel should have electromagnetic energy (EME) awareness training.
- All personnel entering this site must be authorized.
- Obey all posted signs.
- Assume all antennas are active.
- Before working on antennas, notify owners and disable appropriate transmitters.
- Maintain minimum 3 feet clearance from all antennas.
- Do not stop in front of antennas.
- Use personal RF monitors while working near antennas.
- Never operate transmitters without shields during normal operation.
- Do not operate base station antennas in equipment room.

INFO SIGN #5

INFORMATION

ACTIVE ANTENNAS ARE MOUNTED

- ☐ ON THE OUTSIDE OF THIS BUILDING
- ☐ BEHIND THIS PANEL
- ☐ ON THIS STRUCTURE

STAY BACK A MINIMUM OF 3 FEET FROM THESE ANTENNAS

Contact AT&T at _____ and follow their instructions prior to performing any maintenance or repairs closer than 3 feet from the antennas.

This is AT&T site# _____

at&t

INFO SIGN #2

STAY BACK 3 FEET FROM ANTENNA

at&t

INFO SIGN #3



ALERTING SIGN (FOR CELL SITE BATTERIES)



ALERTING SIGN (FOR DIESEL FUEL)



ALERTING SIGN (FOR PROPANE)

GENERAL SIGNAGE GUIDELINES

Structure Type	INFO SIGN #1	INFO SIGN #2	INFO SIGN #3	INFO SIGN #4	Striping	NOTICE SIGN	CAUTION SIGN
Towers							
Monopole/Monopine/Monopalm	entrance gates, shelter doors **OR** on the outdoor cabinets	climbing side of the Tow er	On backside of Antennas	entrance gates, shelter doors **OR** on the outdoor cabinets			At the height of the first climbing step, min. 9ft above ground
SCE Tow ers/ Tow ers w ith high voltage	entrance gates, shelter doors **OR** on the outdoor cabinets	climbing side of the Tow er	On backside of Antennas	entrance gates, shelter doors **OR** on the outdoor cabinets			At the height of the first climbing step, min. 9ft above ground
Light Poles / Flag Poles	entrance gates, shelter doors **OR** on the outdoor cabinets	on the pole, no less than 3ft below the Antenna and no less than 9ft above ground	On backside of Antennas	entrance gates, shelter doors **OR** on the outdoor cabinets			
Utility Wood Poles (JPA)	entrance gates, shelter doors **OR** on the outdoor cabinets	on the pole, no less than 3ft below the Antenna and no less than 9ft above ground	On backside of Antennas	entrance gates, shelter doors **OR** on the outdoor cabinets		If GP max value of MPE at antenna level is: 0-99%: Notice sign; over 99%: Caution sign at no less than 3ft below antenna and 9ft above ground	
Microcells mounted on non-JPA poles	entrance gates, shelter doors **OR** on the outdoor cabinets	on the pole, no less than 3ft below the Antenna and no less than 9ft above ground	On backside of Antennas	entrance gates, shelter doors **OR** on the outdoor cabinets		Notice or Caution sign at no less than 9ft above ground: only if the exposure exceeds 90% of the General Public exposure at 6ft above ground or at outside surface of adjacent buildings	
Roof Tops							
At all access points to the roof	X			X			
On Antennas	X		X	X			
Concealed Antennas	X	X		X			
antennas mounted facing outside the building	X	X		X			
antennas on support structure	X	X		X			
Roofview Graph:							
Radiation area is w ithin 3ft from antenna	X	adjacent to each antenna		X		either Notice or Caution sign (based on Roofview results) at antennas/barrier	
Radiation area is beyond 3ft from antenna	X	adjacent to each antenna		X	diagonal, yellow striping as to Roofview graph		
Church Steeples	Access to steeple	adjacent to antennas if antennas are concealed	On backside of Antennas	Access to steeple			Caution sign at the antennas
Water Stations	Access to ladder	adjacent to antennas if antennas are concealed	On backside of Antennas	Access to ladder			Caution sign beside Info sign #1, min. 9ft above ground

Notes for Rooftop sites:

1. Either NOTICE or CAUTION signs need to be posted at each sector as close as possible to: the outer edge of the striped off area or the outer antennas of the sector.
2. If Roofview show s: only blue = Notice Sign, blue and yellow = Caution Sign, only yellow = Caution Sign to be installed.
3. Should the required striping area interfere w ith any structures or equipment (A/C, vents, roof hatch, doors, other antennas, dishes, etc.), please notify AT&T to modify the striping area, prior to starting the w ork

SIGNAGE GUIDELINES CHART

AT&T
930 NATIONAL PARKWAY
SCHAUMBURG, IL 60173

NEXIUS
DANIEL KALINA
SITE ACQUISITION SPECIALIST
PHONE: 630-946-7741
DANIEL.KALINA@NEXIUS.COM

WESTCHESTER SERVICES LLC
604 FOX GLEN
BARRINGTON, IL 60010
PHONE: 847-277-0070
AE@Westchesterservices.com

JOHN M. BANKS ARCHITECT
604 FOX GLEN
BARRINGTON, IL 60010
TELEPHONE: 847-277-0070
FAX : 847-277-0080
jbanks@westchesterservices.com

NSB
15515920/IL4218
ILL04218
525 VILLAGE CENTER DRIVE
BURR RIDGE, IL 60527

REVISIONS

REV.	DATE	DESCRIPTION	INITIALS
0	07/05/22	PERMIT/CONSTRUCTION	CG
A	06/09/22	PRELIMINARY CD	DS

NOT FOR CONSTRUCTION UNLESS LABELED AS CONSTRUCTION SET

07/05/22

STATE OF ILLINOIS
JOHN M. BANKS
001-014586
LICENSED ARCHITECT

EXP. DATE 11/30/22

"I HEREBY CERTIFY THAT THESE PLANS WERE PREPARED BY ME OR UNDER MY DIRECT SUPERVISION AND THAT I AM A DULY REGISTERED ARCHITECT UNDER THE LAWS OF THE STATE OF ILLINOIS"

SHEET TITLE

LEGEND AND DETAILS

SHEET NUMBER

SIGNAGE

THE INFORMATION CONTAINED IN THIS SET OF CONSTRUCTION DOCUMENTS IS PROPRIETARY BY NATURE. ANY USE OR DISCLOSURE OTHER THAN THAT WHICH RELATES TO CARRIER SERVICES IS STRICTLY PROHIBITED.

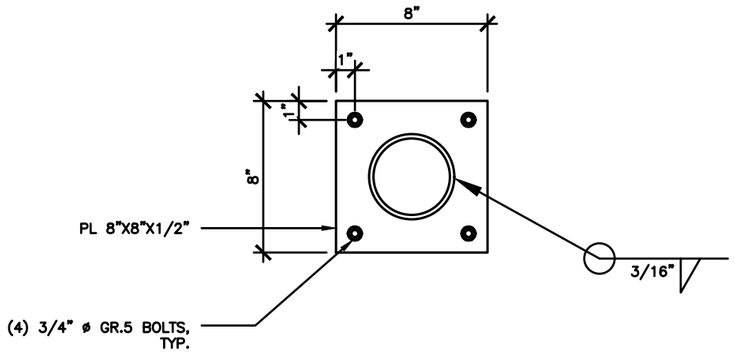

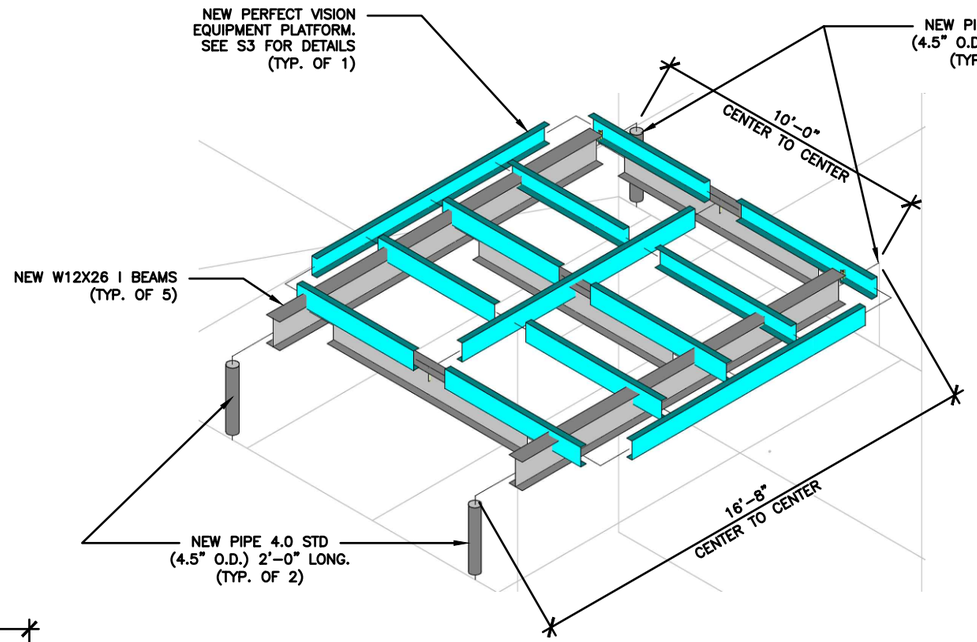

ISOMETRIC VIEW

STRUCTURAL NOTES:

1. STRUCTURAL CALCULATIONS PREPARED BY JOHN M BANKS ARCHITECT. CONTRACTOR TO VERIFY WITH PROJECT MANAGER TO OBTAIN A COPY.
2. CONTRACTOR TO REFER TO STRUCTURAL CALCULATIONS FOR ADDITIONAL LOADS. NO ERECTION OR MODIFICATION OF BUILDING SHALL BE MADE WITHOUT APPROVAL OF STRUCTURAL ENGINEER.

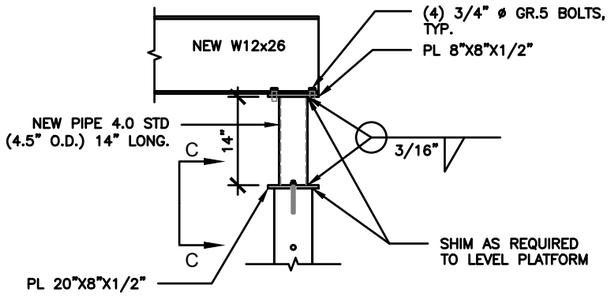

B-B DETAIL

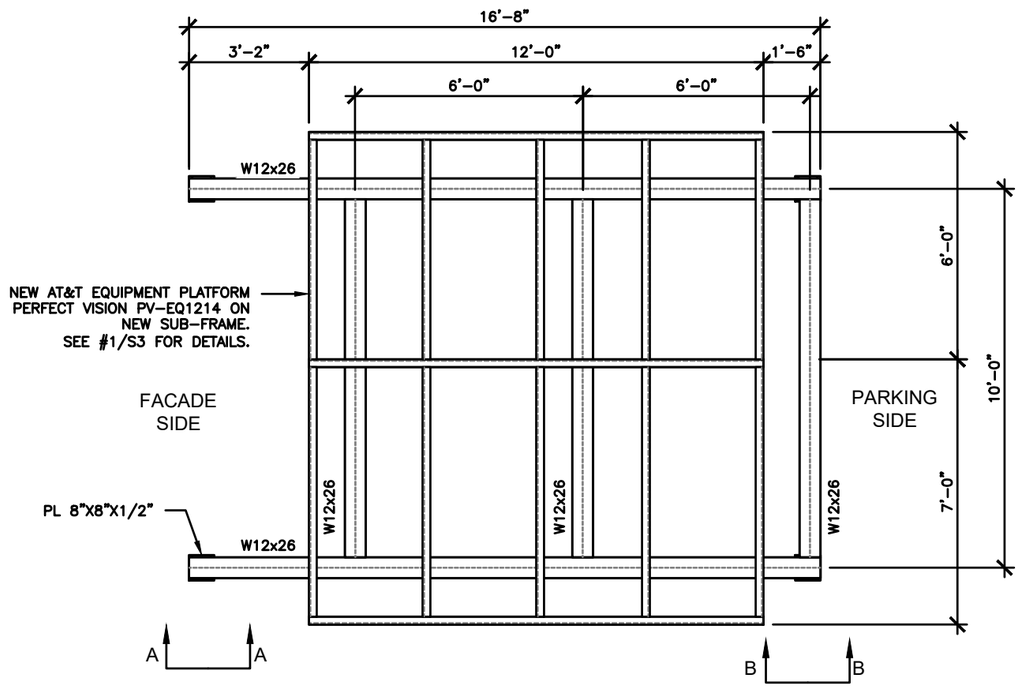

PLATFORM FRAME & SUB-FRAME PLAN

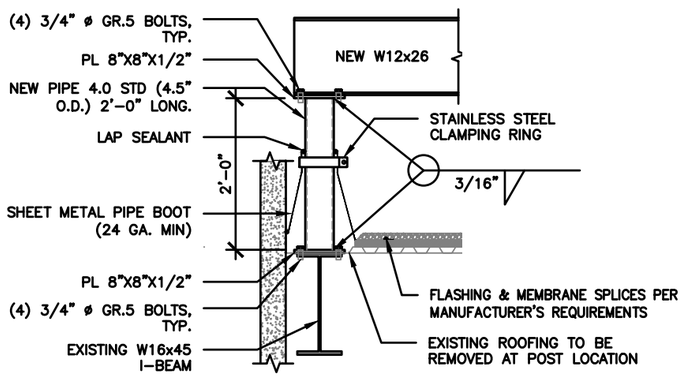

A-A DETAIL

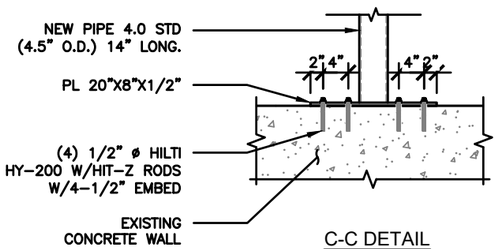

C-C DETAIL

PLATFORM STRUCTURAL DETAILS

SCALE N.T.S. | 1

AT&T
930 NATIONAL PARKWAY
SCHAUMBURG, IL 60173

NEXIUS
DANIEL KALINA
SITE ACQUISITION SPECIALIST
PHONE: 630-946-7741
DANIEL.KALINA@NEXIUS.COM

WESTCHESTER SERVICES LLC
604 FOX GLEN
BARRINGTON, IL 60010
PHONE: 847-277-0070
AE@Westchesterservices.com

JOHN M. BANKS ARCHITECT
604 FOX GLEN
BARRINGTON, IL 60010
TELEPHONE: 847-277-0070
FAX : 847-277-0080
jbanks@westchesterservices.com

NSB
15515920/IL4218
ILL04218
525 VILLAGE CENTER DRIVE
BURR RIDGE, IL 60527

REVISIONS			
REV.	DATE	DESCRIPTION	INITIALS
0	07/05/22	PERMIT/CONSTRUCTION	CG
A	06/09/22	PRELIMINARY CD	DS

NOT FOR CONSTRUCTION UNLESS LABELED AS CONSTRUCTION SET

JOSEPH A. MEYER 081-007241 LICENSED STRUCTURAL ENGINEER ILLINOIS BARRINGTON, IL

"I HEREBY CERTIFY THAT THESE PLANS WERE PREPARED BY ME OR UNDER MY DIRECT SUPERVISION AND THAT I AM A DULY REGISTERED ENGINEER UNDER THE LAWS OF THE STATE OF ILLINOIS"

SHEET TITLE: PLATFORM STRUCTURAL DETAILS

SHEET NUMBER: S1

THE INFORMATION CONTAINED IN THIS SET OF CONSTRUCTION DOCUMENTS IS PROPRIETARY BY NATURE. ANY USE OR DISCLOSURE OTHER THAN THAT WHICH RELATES TO CARRIER SERVICES IS STRICTLY PROHIBITED.

NOT USED

SCALE N.T.S. 4

NOT USED

SCALE N.T.S. 2

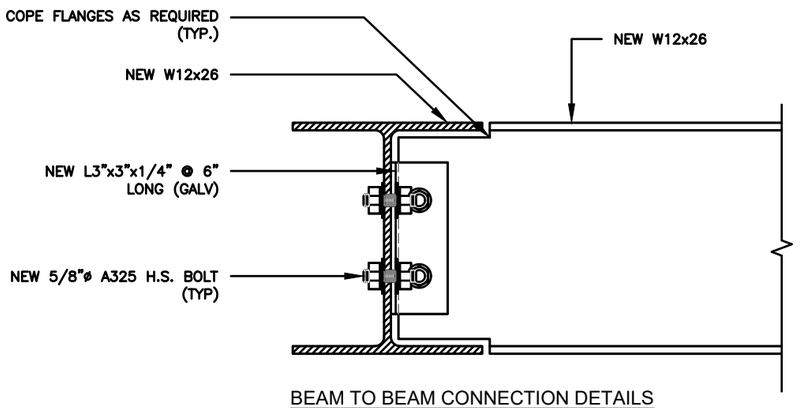

BEAM TO BEAM CONNECTION DETAILS

BEAM TO BEAM CONNECTION

SCALE N.T.S. 3

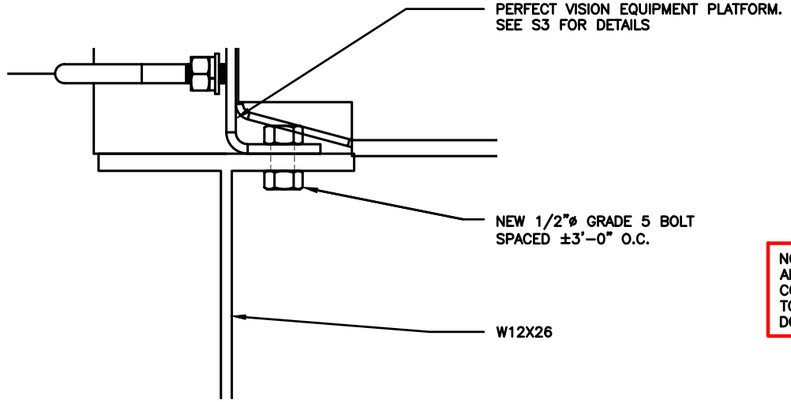

STRUCTURAL NOTES:

1. STRUCTURAL CALCULATIONS PREPARED BY JOHN M BANKS ARCHITECT. CONTRACTOR TO VERIFY WITH PROJECT MANAGER TO OBTAIN A COPY.
2. CONTRACTOR TO REFER TO STRUCTURAL CALCULATIONS FOR ADDITIONAL LOADS. NO ERECTION OR MODIFICATION OF BUILDING SHALL BE MADE WITHOUT APPROVAL OF STRUCTURAL ENGINEER.

NOTE:
ANY DRILLING REQUIRED FOR THIS CONNECTION SHALL BE COMPLETED PRIOR TO CABINET INSTALLATION.
DO NOT DRILL MEMBERS UNDER LOAD.

PLATFORM TO BEAM CONNECTION DETAIL

SCALE N.T.S. 1

AT&T
930 NATIONAL PARKWAY
SCHAUMBURG, IL 60173

NEXIUS
DANIEL KALINA
SITE ACQUISITION SPECIALIST
PHONE: 630-946-7741
DANIEL.KALINA@NEXIUS.COM

WESTCHESTER SERVICES LLC
604 FOX GLEN
BARRINGTON, IL 60010
PHONE: 847-277-0070
AE@Westchesterservices.com

JOHN M. BANKS ARCHITECT
604 FOX GLEN
BARRINGTON, IL 60010
TELEPHONE: 847-277-0070
FAX : 847-277-0080
jbanks@westchesterservices.com

NSB
15515920/IL4218
ILL04218
525 VILLAGE CENTER DRIVE
BURR RIDGE, IL 60527

REVISIONS

REV.	DATE	DESCRIPTION	INITIALS
0	07/05/22	PERMIT/CONSTRUCTION	CG
A	06/09/22	PRELIMINARY CD	DS

NOT FOR CONSTRUCTION UNLESS LABELED AS CONSTRUCTION SET

JOSEPH A. MEYER 081-003241 LICENSED STRUCTURAL ENGINEER ILLINOIS

"I HEREBY CERTIFY THAT THESE PLANS WERE PREPARED BY ME OR UNDER MY DIRECT SUPERVISION AND THAT I AM A DULY REGISTERED ENGINEER UNDER THE LAWS OF THE STATE OF ILLINOIS"

SHEET TITLE
STRUCTURAL DETAILS

SHEET NUMBER
S2

PV-EQ1214-B

6-POST EQUIPMENT PLATFORM BASE KIT

WEIGHT: 2000 LBS

POST, STEP, HANDRAIL, AND OTHER ACCESSORIES SOLD SEPARATELY

SEE DRAWING WCEQ-ENG-01 FOR ADDITIONAL DETAILS

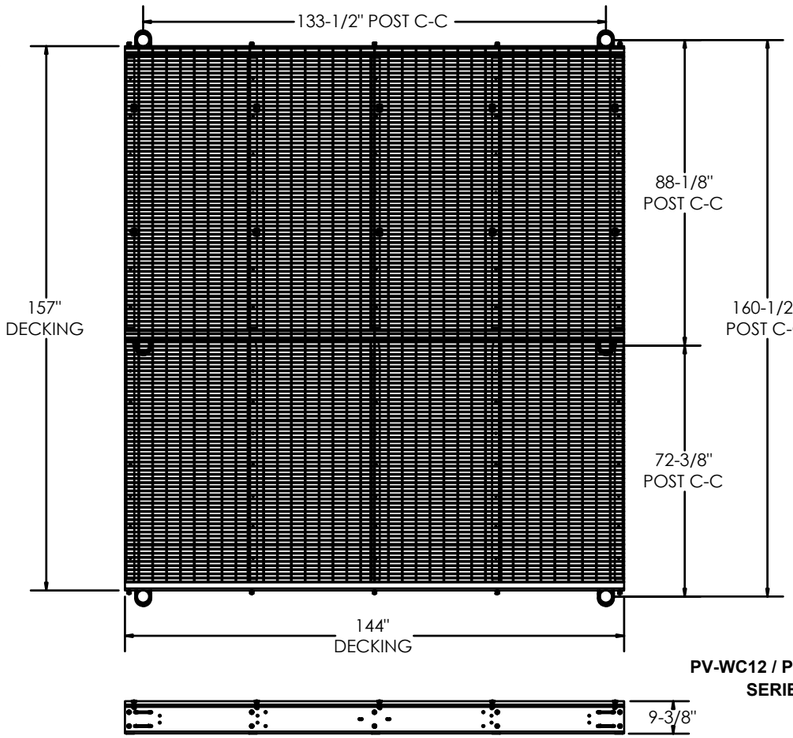

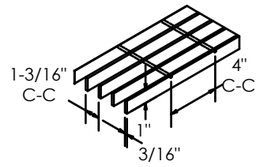

BAR GRATING
Style: 1"x3/16" 19W4
W: 735lb/ft^2
Material: Steel HDG

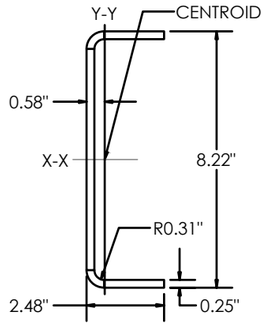

MAIN MEMBER (M)
W: 10.4 lb/ft
A: 3.08 in^2
Ix: 27.71 in^4
Iy: 1.56 in^4
Material: A36 HDG

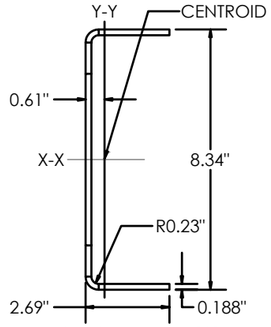

CROSS MEMBER (C)
W: 8.35 lb/ft
A: 2.45 in^2
Ix: 23.76 in^4
Iy: 1.53 in^4
Material: A36 HDG

PV-WC12 / PV-EQ12 SERIES:

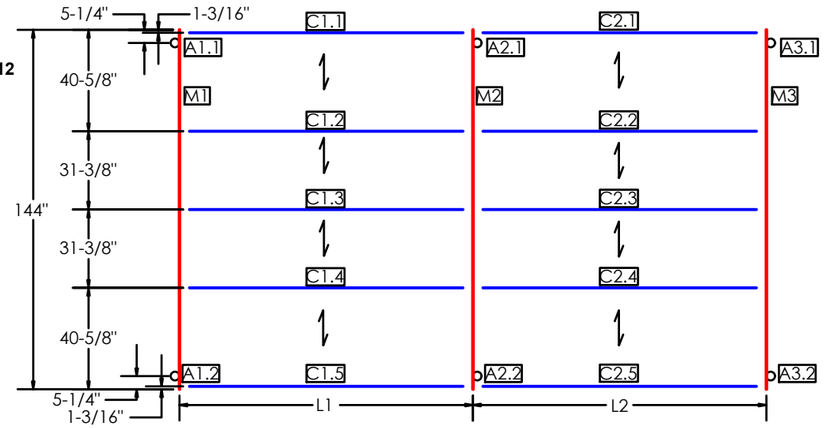

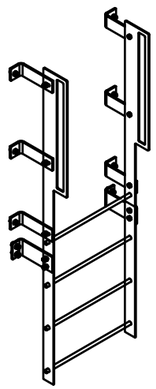

PV-EQ-LADDER
WEIGHT: 95 LBS

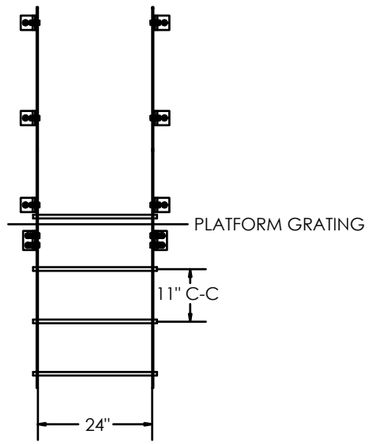

SHEET: 1 OF 1	THIRD ANGLE PROJECTION	CATEGORY: 07_Platforms & Canopies	4			
		SERIES: 01_Platforms	3			
12/6/2021	SCALE: 1:36	TYPE: PV-EQ	2			
DIMENSIONS ARE IN INCHES TOLERANCES U.N.O. HOLES: +1/16", -1/32" ANGULAR: PROFILE ±1/4, BEND2 ± • ALL OTHERS: ±1/16"		BY: DJN	1			EQUIPMENT PLATFORM
		CHECKED: SJS	0	INITIAL RELEASE	12/2/21	DOCUMENT NUMBER: EQ1214-ENG-R0 — REV: 0
		STATUS: APPROVED	REV	DESCRIPTION	DATE	

EQUIPMENT PLATFORM DETAILS (PV-EQ1018-B WITH PV-EQ1018-HR AND PV-EQ-POST-7)

SCALE: N.T.S. — 1

AT&T
930 NATIONAL PARKWAY
SCHAUMBURG, IL 60173

NEXIUS
DANIEL KALINA
SITE ACQUISITION SPECIALIST
PHONE: 630-946-7741
DANIEL.KALINA@NEXIUS.COM

WESTCHESTER SERVICES LLC
604 FOX GLEN
BARRINGTON, IL 60010
PHONE: 847-277-0070
AE@Westchesterservices.com

JOHN M. BANKS ARCHITECT
604 FOX GLEN
BARRINGTON, IL 60010
TELEPHONE: 847-277-0070
FAX : 847-277-0080
jbanks@westchesterservices.com

NSB
15515920/IL4218
ILL04218
525 VILLAGE CENTER DRIVE
BURR RIDGE, IL 60527

REVISIONS

REV.	DATE	DESCRIPTION	INITIALS
0	07/05/22	PERMIT/CONSTRUCTION	CG
A	06/09/22	PRELIMINARY CD	DS

NOT FOR CONSTRUCTION UNLESS LABELED AS CONSTRUCTION SET

JOSEPH A. MEYER 081-00[illegible]41 LICENSED STRUCTURAL ENGINEER ILLINOIS

"I HEREBY CERTIFY THAT THESE PLANS WERE PREPARED BY ME OR UNDER MY DIRECT SUPERVISION AND THAT I AM A DULY REGISTERED ENGINEER UNDER THE LAWS OF THE STATE OF ILLINOIS"

SHEET TITLE: EQUIPMENT PLATFORM DETAILS

SHEET NUMBER: S3

THE INFORMATION CONTAINED IN THIS SET OF CONSTRUCTION DOCUMENTS IS PROPRIETARY BY NATURE. ANY USE OR DISCLOSURE OTHER THAN THAT WHICH RELATES TO CARRIER SERVICES IS STRICTLY PROHIBITED.

THE INFORMATION CONTAINED IN THIS SET OF CONSTRUCTION DOCUMENTS IS PROPRIETARY BY NATURE. ANY USE OR DISCLOSURE OTHER THAN THAT WHICH RELATES TO CARRIER SERVICES IS STRICTLY PROHIBITED.

STRUCTURAL NOTES:

SEE S5 FOR DETAILS OF THE ANTENNAS FRAME & SUB-FRAME

STRUCTURAL NOTES:

1. STRUCTURAL CALCULATIONS PREPARED BY JOHN M BANKS ARCHITECT. CONTRACTOR TO VERIFY WITH PROJECT MANAGER TO OBTAIN A COPY.
2. CONTRACTOR TO REFER TO STRUCTURAL CALCULATIONS FOR ADDITIONAL LOADS. NO ERECTION OR MODIFICATION OF BUILDING SHALL BE MADE WITHOUT APPROVAL OF STRUCTURAL ENGINEER.

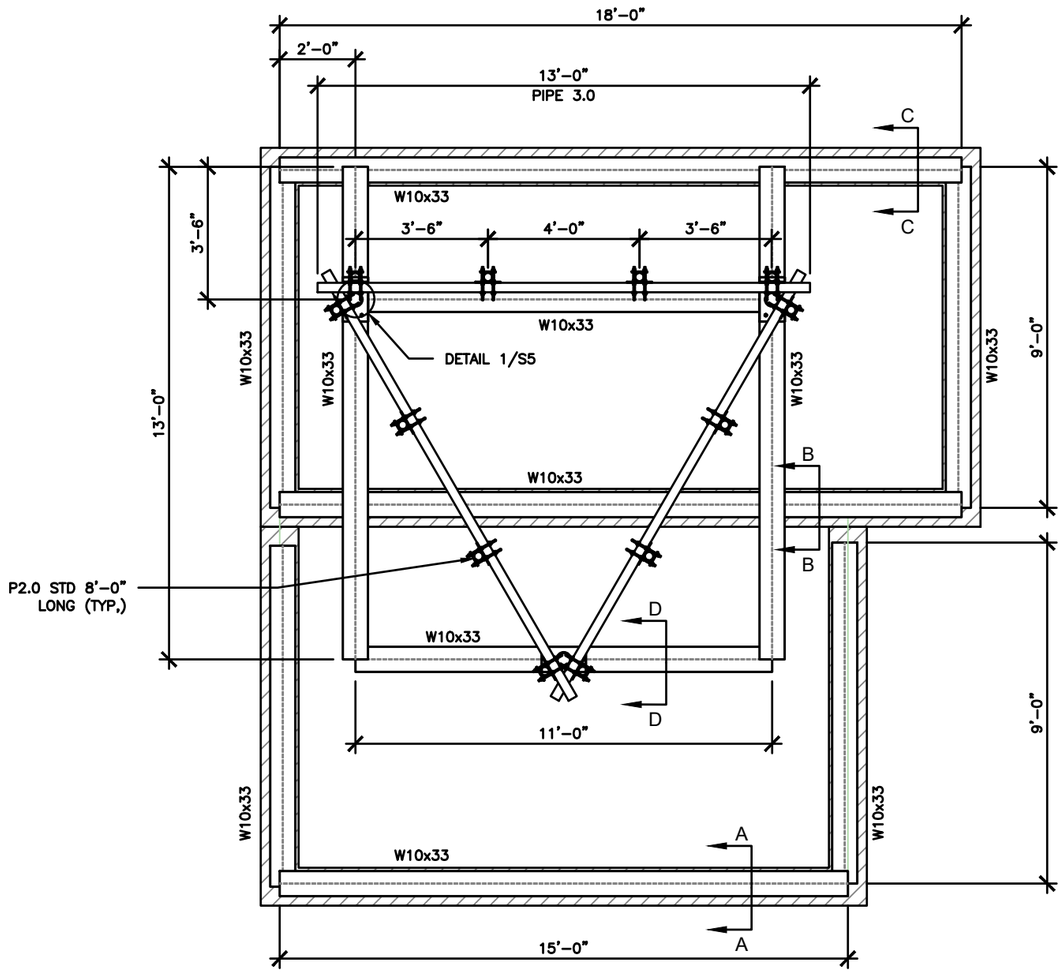

ANTENNAS FRAME & SUB-FRAME PLAN

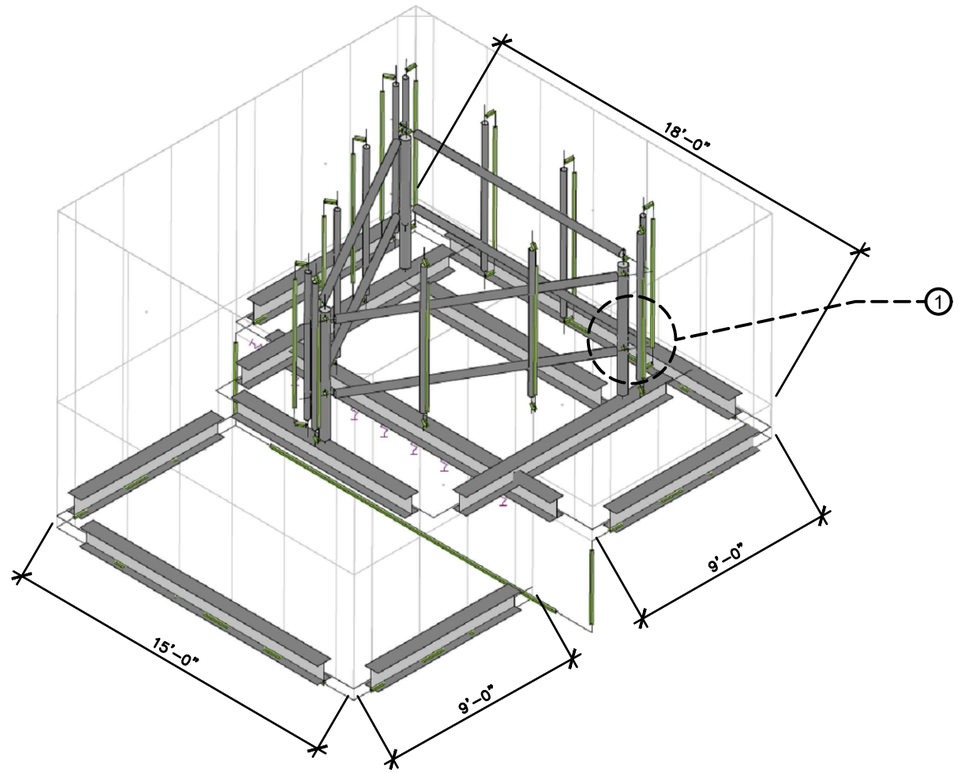

ISOMETRIC VIEW

ANTENNA FRAME STRUCTURAL DETAILS

SCALE N.T.S. | 1

AT&T
930 NATIONAL PARKWAY
SCHAUMBURG, IL 60173

NEXIUS
DANIEL KALINA
SITE ACQUISITION SPECIALIST
PHONE: 630-946-7741
DANIEL.KALINA@NEXIUS.COM

WESTCHESTER SERVICES LLC
604 FOX GLEN
BARRINGTON, IL 60010
PHONE: 847-277-0070
AE@Westchesterservices.com

JOHN M. BANKS ARCHITECT
604 FOX GLEN
BARRINGTON, IL 60010
TELEPHONE: 847-277-0070
FAX : 847-277-0080
jbanks@westchesterservices.com

NSB
15515920/IL4218
ILL04218
525 VILLAGE CENTER DRIVE
BURR RIDGE, IL 60527

REVISIONS

REV.	DATE	DESCRIPTION	INITIALS
0	07/05/22	PERMIT/CONSTRUCTION	CG
A	06/09/22	PRELIMINARY CD	DS

NOT FOR CONSTRUCTION UNLESS LABELED AS CONSTRUCTION SET

JOSEPH A. MEYER 081-002341 LICENSED STRUCTURAL ENGINEER ILLINOIS

"I HEREBY CERTIFY THAT THESE PLANS WERE PREPARED BY ME OR UNDER MY DIRECT SUPERVISION AND THAT I AM A DULY REGISTERED ENGINEER UNDER THE LAWS OF THE STATE OF ILLINOIS"

SHEET TITLE: STRUCTURAL DETAILS

SHEET NUMBER: S4

THE INFORMATION CONTAINED IN THIS SET OF CONSTRUCTION DOCUMENTS IS PROPRIETARY BY NATURE. ANY USE OR DISCLOSURE OTHER THAN THAT WHICH RELATES TO CARRIER SERVICES IS STRICTLY PROHIBITED.

TYP. ALL GRILLAGE BEAMS

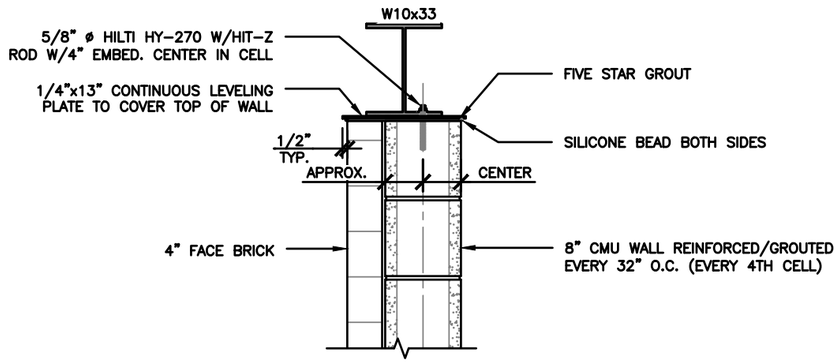

A-A DETAIL

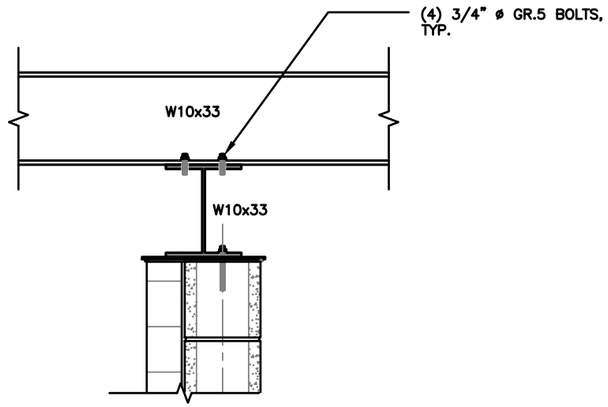

B-B DETAIL

STRUCTURAL NOTES:

1. STRUCTURAL CALCULATIONS PREPARED BY JOHN M BANKS ARCHITECT. CONTRACTOR TO VERIFY WITH PROJECT MANAGER TO OBTAIN A COPY.
2. CONTRACTOR TO REFER TO STRUCTURAL CALCULATIONS FOR ADDITIONAL LOADS. NO ERECTION OR MODIFICATION OF BUILDING SHALL BE MADE WITHOUT APPROVAL OF STRUCTURAL ENGINEER.

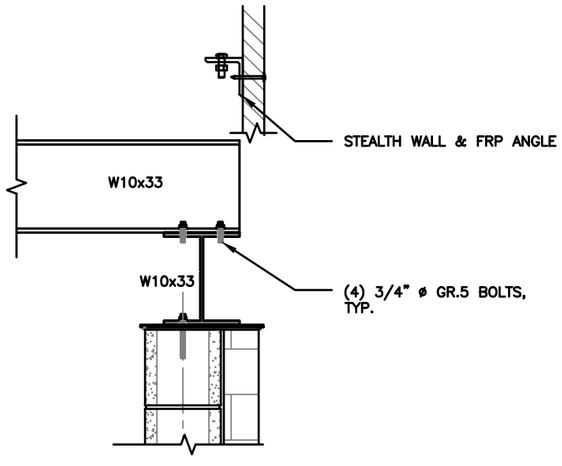

C-C DETAIL

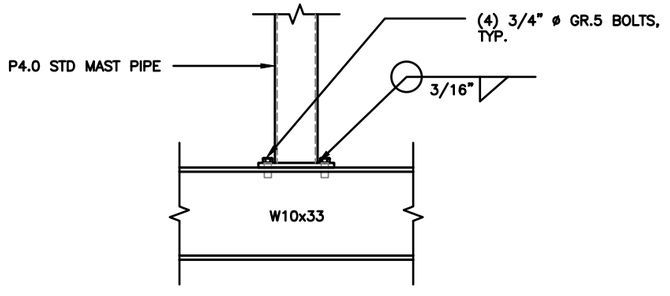

D-D DETAIL

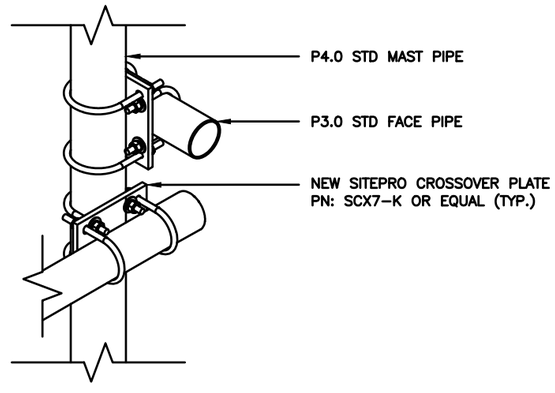

#1 DETAIL

ANTENNA FRAME STRUCTURAL DETAILS

SCALE: N.T.S. | 1

AT&T
930 NATIONAL PARKWAY
SCHAUMBURG, IL 60173

NEXIUS
DANIEL KALINA
SITE ACQUISITION SPECIALIST
PHONE: 630-946-7741
DANIEL.KALINA@NEXIUS.COM

WESTCHESTER SERVICES LLC
604 FOX GLEN
BARRINGTON, IL 60010
PHONE: 847-277-0070
AE@Westchesterservices.com

JOHN M. BANKS ARCHITECT
604 FOX GLEN
BARRINGTON, IL 60010
TELEPHONE: 847-277-0070
FAX : 847-277-0080
jbanks@westchesterservices.com

NSB
15515920/IL4218
ILL04218
525 VILLAGE CENTER DRIVE
BURR RIDGE, IL 60527

REVISIONS			
REV.	DATE	DESCRIPTION	INITIALS
0	07/05/22	PERMIT/CONSTRUCTION	CG
A	06/09/22	PRELIMINARY CD	DS

NOT FOR CONSTRUCTION UNLESS LABELED AS CONSTRUCTION SET

JOSEPH A. MEYER 081-007241 LICENSED STRUCTURAL ENGINEER OF ILLINOIS BARRINGTON, IL

"I HEREBY CERTIFY THAT THESE PLANS WERE PREPARED BY ME OR UNDER MY DIRECT SUPERVISION AND THAT I AM A DULY REGISTERED ENGINEER UNDER THE LAWS OF THE STATE OF ILLINOIS"

SHEET TITLE: STRUCTURAL DETAILS

SHEET NUMBER: S5

JMB John M. Banks Architect

604 FOX GLEN, BARRINGTON, IL 60010
847/277-0070 . FAX: 847/277-0080
jbanks@westchesterservices.com

Date: **June 27, 2022**

Kristen Weiss
Nexius
2595 N Dallas Parkway
Frisco, TX 75034

Subject: Structural Analysis Report

AT&T Mobility Co-Locate
Site Number: IL4218
Site Name: IL4218
FA#: 15515920
Pace#: MRCHI058280
PTN#: 3301A0YCJ5

Engineering Firm Designation: **John M. Banks Architect**

Site Data: **565 Village Center Dr., Burr Ridge, IL 60527**
N41.752630, W87.912430
Cook County – 50ft Rooftop

Kristen Weiss,

John M Banks Architect is pleased to submit this **"Structural Analysis Report"** to determine the structural integrity of the above-mentioned antenna mounting system impact on the local structure. The purpose of the analysis is to determine acceptability of the local structure stress level. Based on our analysis we have determined the stress levels under the below loading conditions to be:

Existing and Proposed Equipment **Sufficient Capacity**
Note: See Table 2-1 for the existing and proposed loading.

Member Type	Result	Pass/Fail
Overall	49.3%	Pass

The analysis has been performed in accordance with the following criteria:

Building Code: International Building Code 2018
TIA Standard: TIA-222-H

I certify that this report was prepared by me or under my direct supervision and that I am a licensed Structural Engineer under the laws of the State of Illinois.

Joseph Meyer, SE
Structural Engineer



TABLE OF CONTENTS

1) INTRODUCTION

2) ANALYSIS CRITERIA
Table 2-1 – Proposed Final Antenna Configuration
Table 2-2 – Proposed Final Platform Configuration

3) ANALYSIS PROCEDURE
Table 3-1 – Documents Provided
Table 3-2 – Companion Document
3.1 Analysis Method

4) ANALYSIS RESULTS
Table 4-1 – Critical Section Capacity (Summary)
4.1 Recommendations

5) ASSUMPTIONS

6) APPENDIX A
Calculations

1) INTRODUCTION

This is a 50ft tall rooftop located in Cook County, IL. The proposed equipment cabinet and generator will be mounted on top of a proposed equipment platform (PerfectVision PN: PV-EQ1214) on the second floor roof.

2) ANALYSIS CRITERIA

The structural analysis was performed for this structure in accordance with the requirements of TIA-222-H Structural Standards for Antenna Supporting Structures and Antennas using an ultimate gust wind speed of 107 mph with no ice, 40 mph with 1.5 inch ice thickness, risk category II, exposure category B with topographic category 1 and crest height of 0 feet.

Table 2-1 – Proposed Final Antenna Configuration
(New antennas in **bold**)

Center Line Elevation (ft)	Sector (Az.)	Pos.	Antenna	Radio(s)	Note
55	Alpha (0°)	1	**(1) NNH4-65B-R6H4**	**(1) RRUS4449 B5/B12** **(1) RRUS8843 B2/B66A**	
		2	-Empty-		
		3	**(1) Air 6449 B77D** **(1) Air 6419 B77G**		1
		4	**(1) NNH4-65B-R6H4**	**(1) RRUS4478 B14** **(1) RRUS4415 B25** **(1) RRUS4415 B30**	
55	Beta (120°)	1	**(1) NNH4-65B-R6H4**	**(1) RRUS4449 B5/B12** **(1) RRUS8843 B2/B66A**	
		2	-Empty-		
		3	**(1) Air 6449 B77D** **(1) Air 6419 B77G**		1
		4	**(1) NNH4-65B-R6H4**	**(1) RRUS4478 B14** **(1) RRUS4415 B25** **(1) RRUS4415 B30**	
55	Gamma (240°)	1	**(1) NNH4-65B-R6H4**	**(1) RRUS4449 B5/B12** **(1) RRUS8843 B2/B66A**	
		2	-Empty-		
		3	**(1) Air 6449 B77D** **(1) Air 6419 B77G**		1
		4	**(1) NNH4-65B-R6H4**	**(1) RRUS4478 B14** **(1) RRUS4415 B25** **(1) RRUS4415 B30**	

Note: 1. Proposed antennas are to be installed stacked vertically on the same pipe mount, RAD for antennas will be ±3ft to accommodate this

Additional Equipment:
(3) DC9-48-60-24-8C-EV

Table 2-2 – Equipment Platform Configuration

(New equipment in **bold**)

Final Proposed Platform Loading	Weight/each
(1) WUC Cabinet	**2270lbs cabinet + 2000lbs batteries**
(1) Generator	**2000lbs fully fueled**
(1) Ciena	**100lbs**

3) ANALYSIS PROCEDURE

Table 3-1 – Documents Provided

Document	Remarks	Reference	Date	Source
Most Recent Site Photos	N/A	N/A	9/23/21	JMBA
Original Building Drawings	Opus Architecture & Engineering	N/A	6/11/07	Nexius
Manufacturer Cut Sheet	Perfect Vision	PV-EQ1214	N/A	Perfect Vision
Stealth Design Drawings	Raycap	N/A	6/24/22	Raycap
Stealth Design Analysis	Raycap	N/A	6/24/22	Raycap

Table 3-2 – Companion Document

Document	Remarks	Date	Note
Preliminary Construction Drawings	JMBA	8/10/21	Rev B
RFDS Scoping Document	Nexius	5/4/22	
Mount Analysis Report	JMBA	6/28/22	

3.1) Analysis Method

Risa-3D (version 17.0.4) is a finite element analysis software program was used for modeling and analyzing frame structures. The output from the analysis can be found in Appendix A.

Mathcad 15 is a mathematics software program used for creating hand calc templates. The output of these calculations can be found in Appendix A.

4) ANALYSIS RESULTS

Table 4-1 – Critical Section Capacity (Summary)

Member Type	% Capacity	Pass/Fail
Equipment Platform	26.9%	Pass
Local Structure (steel framing)	49.3%	Pass
Local Structure (concrete wall)	14.3%	Pass
Overall	49.3%	Pass

4.1) Recommendations

The equipment platform and local structure have sufficient capacity to carry the existing and proposed loads.

5) ASSUMPTIONS

- The analysis performed is to the theoretical capacity of the members and connections. No accommodations are taken for any damaged, rusted, deteriorated, or otherwise compromised member conditions. To this, the tower or structure is assumed to be properly maintained and monitored and this analysis cannot be considered to be a condition assessment of the structure.

- All loading conditions (dead, live, ice, wind, etc.) are calculated and considered in this analysis by the Structural Engineer.

- Minimum loading conditions are determined from the relevant codes and literature. Any higher loading conditions required by the local jurisdiction or structure owner should be made known to John M. Banks Architect immediately for analysis. No lesser conditions will be accommodated.

- If the Topographic Category would be 2, 3, or 4, then the Rigorous Topographic Factor Procedure (Method 2) is used. In the case it would be categorized at Topographic Category 1 (slope less than 10% or bottom half of feature), then Method 2 defaults to Method 1. In that situation, the Simplified Topographic Factor Procedure (Method 1) is used. Method 2 Topographic coefficients will be based on conservative engineering judgment and best available geographic survey data.

- Member sizes are assumed to be of standard AISC or manufacturer designations unless explicitly specified otherwise. The geometry of the tower or structure is assumed as schematic. Steel grade and concrete strength are assumed to be conservative standard and fully developed unless otherwise specified.

- The information provided to Westchester for analysis is assumed accurate and up to date as supplied. No independent efforts were taken by Westchester to verify the validity of the information supplied. If any additional information is presented at any time that contradicts what is referenced in the analysis, the analysis is invalid and must be performed again with the new information.

- Any reinforcement or modifications are assumed to be fully installed and functional.

- All welds are assumed to have been performed to current welding standards and are assumed to develop their full capacity and to be in good condition. In addition, all bolts and bolt-like anchors are assumed to be fully tightened, fastened, or bonded to the manufacturers' specifications and are assumed to have full capacity.

- Mount connections to towers are intentionally neglected from this analysis unless otherwise noted. Full rigorous analysis of these connections is not possible with standard methods. Typically, these connections are tested empirically by the mount manufacturer combined with full FEA analysis. Good engineering practice would demand that these critical connections are adequately designed. It reasonable to assume that a passing mount analysis can be taken to indicate the mount to tower connection is passing as well.

- Numerous connection details of large-scale structures are unobtainable and are omitted from the structural analysis. This includes, but is not limited to: bolts, welds, flanges, and small gusset plates. These connections are considered adequate and are therefore neglected from the analysis. In addition, in the absence of building plans, many wall, floor, and ceiling constructions can only be determined from observable field data and are supplemented by best judgment and experience.

- Antennas, dishes, feedlines, and any other such appurtenances are assumed adequate through manufacturer testing. No analysis is provided for the structural strength or stability of these items unless otherwise specified.

- Other carrier equipment that is unknown at the time of the analysis are conservatively estimated visually (size and weight) as this information may not be available.

- Antenna and other equipment small-scale mounting systems (equipment to mount pipe) are assumed structurally sound unless specifically called for in the analysis.

- Soil conditions and foundations are not considered unless specified in the analysis and have no deterioration or defects. For sites located on a building, only local effects of the equipment is considered unless otherwise specified. The overall structure of the building and its foundation are assumed to be unaffected by the telecom equipment.

- Any differences between the scope of work and that found at the site at any time prior to installation must be brought to the attention of Westchester immediately. Any changes or substitutions to any part of the scope of work must be brought to Westchester for explicit approval. Any changes made without prior approval will render the analysis and its conclusions invalid.

APPENDIX A

CALCULATIONS

John M Banks, Architect
604 Fox Glen
Barrington, IL 60010
PH: 847.277.0070
jbanks@westchesterservices.com

IL4218
IL4218
FA#: 15515920
Client: Nexius/AT&T

References: *1) 2018 International Building Code*
2) ANSI TIA-222-H, Structural Standard for Antenna Supporting Structures and Antennas
3) AISC 360-10 Specification for Structural Steel Buildings

Input

Wind Factors (as per TIA-222-H)

$V := 107$ *mph* — V_{nom} *per Ref. (2)*

$V_i := 40$ *mph* — *Basic wind speed with ice*

$V_m := 30$ *mph* — *Wind speed for concurrent man live load*

$t_i := 1.5 \cdot in$ — *Design ice thickness*

$G_H := 1.0$ — *Ref. (2), Chapter 16.6*

$R_c :=$ "II" — *Risk Category*

$K_d := 0.95$ — *Wind Direction Probability Factor, Ref. (2), Table 2-2*

$Ex :=$ "B" — *Exposure category. See Ref. (2), Table 2-4*

Terrain := — *Topographic Category. See Ref. (2), Section 2.6.6*

- (•) Flat
- ( ) Ridge
- ( ) Flat Top Ridge
- ( ) Hill
- ( ) Flat Top Hill
- ( ) Escarpment

"Flat" Terrain is defined as less than 10% slope. This determines the topographic category method used. Method 2 is used for all options except for 'flat', which defaults to Method 1.
See Ref (2), 2.6.6.2.2

$z_s := 696 ft$ — *Elevation above Sea Level of base of structure*

Does rooftop wind speed up factor apply (per Ref. (2) Section 2.6.7)?

query :=

- ( ) Yes
- (•) No

Ks conditions (must meet 1 to require Ks factor)
1. Building is 50ft in height or greater and unobstructed in a continuous 90deg quadrant by other buildings of comparable height from the windward wall for 2600ft or 20 times the height of the structure, whichever is less..
2. Building protrudes 50+ft above the average height of immediately adjacent buildings in a continuous 90deg quadrant.

Seismic data per ASCE7-16 Hazards database

SiteClass := "D"

$S_s := 0.129$ — $T_L := 12$ — $F_v := 2.4$

$S_1 := 0.066$ — $T := 1$ — $F_a := 1.6$

John M Banks, Architect
604 Fox Glen
Barrington, IL 60010
PH: 847.277.0070
jbanks@westchesterservices.com

IL4218
IL4218
FA#: 15515920
Client: Nexius/AT&T

Date: 6/27/2022
By: TH

Antennas/Radios

Antenna name/model

"not used"
NNH4-65B-R6H4
Air 6419 B77G
Air6449 B77D
"not used"
RRUS4415 B25/B30
RRUS4478 B14
RRUS4449 B5/B12
RRUS8843 B2/B66A
DC9

Elevation of antennas

$z_{ant} :=$

55	ft
55	
55	
55	
55	
55	
55	
55	
55	
55	

$N_{antenna} := 10$ *Number of antenna groups*

*Height of antennas**

$height_{ant} :=$

1	in
72	
28.3	
30.4	
1	
15	
14.9	
28	
15	
32.8	

*Width of antennas**

$width_{ant} :=$

1	in
19.6	
16.1	
15.9	
1	
13.2	
13.1	
10	
13.2	
10.25	

*Depth of antennas**

$depth_{ant} :=$

1	in
7.8	
7.6	
8.1	
1	
5.4	
7.3	
15	
9.25	
10.25	

Weight of antennas

$Weight_{ant} :=$

0	lbf
88.2	
66.1	
81.6	
0	
46	
60	
85	
70	
38	

Local Shielding Factor

$LocalShielding :=$

0.90
0.90
0.90
0.90
0.90
0.90
0.90
0.90
0.90
0.90

Typical Values:
x0.9 Per Ref (2) Chapter 16.6, all K.a factors for mount analyses are to be 0.9 for antennas and mount structures.

Antenna Shape?

$SHAPE :=$

1
1
1
1
1
1
1
1
1
0

Shape Guide:
0 = Round
1 = Flat
2 = Dish w/o Radome
3 = Dish w/ Radome
4 = Dish w/ Shroud
5 = Grid Dish

h & w for dishes are outer diameters.
Ellipse shape OK

$K_e = 0.975$ $K_d = 0.95$ $K_s = 1$ $\max(K_{z.ant}) = 0.833$ $\max(q_{z.ant}) = 22.619 \cdot psf$ *Wind pressure coeff.*

$K_1 = 0$ $K_2 = 0$ $\max(K_3) = 0$ $\max(K_{zt.ant}) = 1$

John M Banks, Architect
604 Fox Glen
Barrington, IL 60010
PH: 847.277.0070
jbanks@westchesterservices.com

New Equipment Cabinets on Proposed Platform

Values for RISA 3D analysis of platform

$DL := 15psf$

$LL := 60psf$

$Wt_{WUC} := 2270lbf + 2000lbf = 4270\ lbf$

$Wt_{gen} := 2000lbf$

$Wt_{Ciena} := 100lbf$

$x := Wt_{WUC}$

$L := 3ft$

$W := 6.5ft$

$cab_w := \frac{x}{L \cdot W} - LL = 158.974 \cdot psf$

$x := Wt_{gen}$

$L := 3ft$

$W := 6.5ft$

$cab_w := \frac{x}{L \cdot W} - LL = 42.564 \cdot psf$

John M Banks, Architect
604 Fox Glen
Barrington, IL 60010
PH: 847.277.0070
jbanks@westchesterservices.com

The new cabinets will be installed on a proposed equipment platform. The platform support on the west side (interior side) shall be mounted directly to the 14" precast concrete panel wall between the two 24" square columns.

$P_{plat} := 6500lbf$

$LL := 40psf$

$DL := 140psf$

$Trib := \frac{60ft}{2} + \frac{16.6ft}{2} = 38.3\,ft$ *Tributary area strip length*

$P_{LL} := LL \cdot Trib \cdot 12in$ $P_{LL} = 1.532 \times 10^{3}\,lbf$ *per 1ft strip width*

$P_{DL} := DL \cdot Trib \cdot 12in$ $P_{DL} = 5.362 \cdot kip$ *per 1ft strip width*

$P_u := 1.2 \cdot P_{DL} + 1.6 \cdot (P_{LL} + P_{plat})$ $P_u = 19.286 \cdot kip$

Check concrete wall as column strip capacity (14" thick, 4000psi concrete, 12'-0" clear distance)

$f'_c := 4000psi$

$\phi := .65$

$k := 1.0$

$h := 14in$ *Wall thickness*

$l_c := 12ft$ *Wall vertical clear span*

$A_g := 12in \cdot h$ *Gross area per 1ft strip of wall*

$\phi P_n := 0.55 \cdot \phi \cdot f'_c \cdot A_g \cdot \left[1 - \left(\frac{k \cdot l_c}{32 \cdot h}\right)^2\right]$ $\phi P_n = 215.419 \cdot kip$ *Ref (4) 11.5.3.1*

$\frac{1.6 \cdot (P_u)}{\phi P_n} = 14.324 \cdot \%$

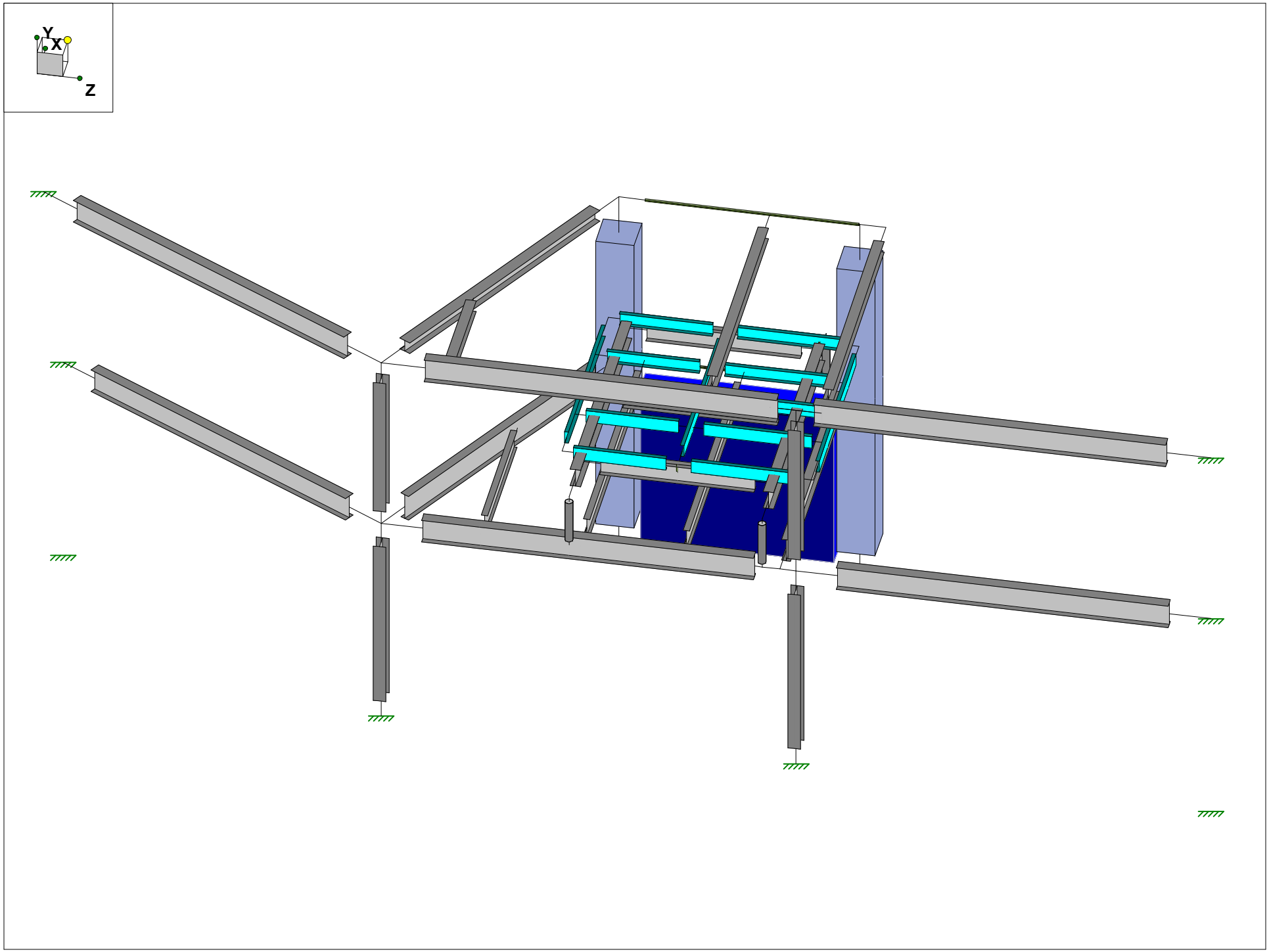
Y
X
Z

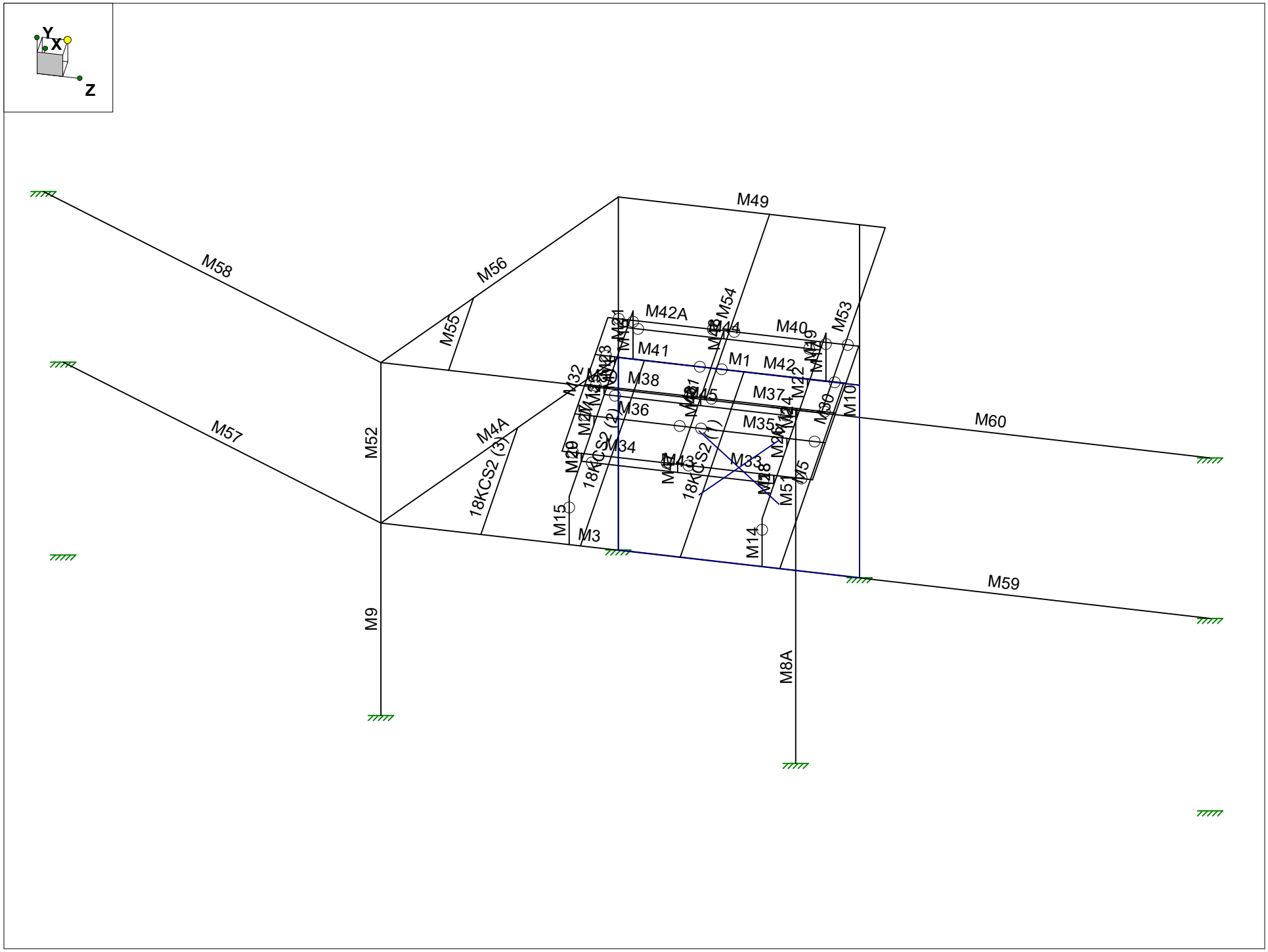
Y
X
Z
M58
M56
M49
M55
M54
M53
M42A
M40
M41
M1
M42
M38
M37
M36
M35
M34
M33
M60
M57
M52
M4A
18KCS2 (3)
18KCS2 (2)
18KCS2 (1)
M15
M3
M14
M59
M9
M8A

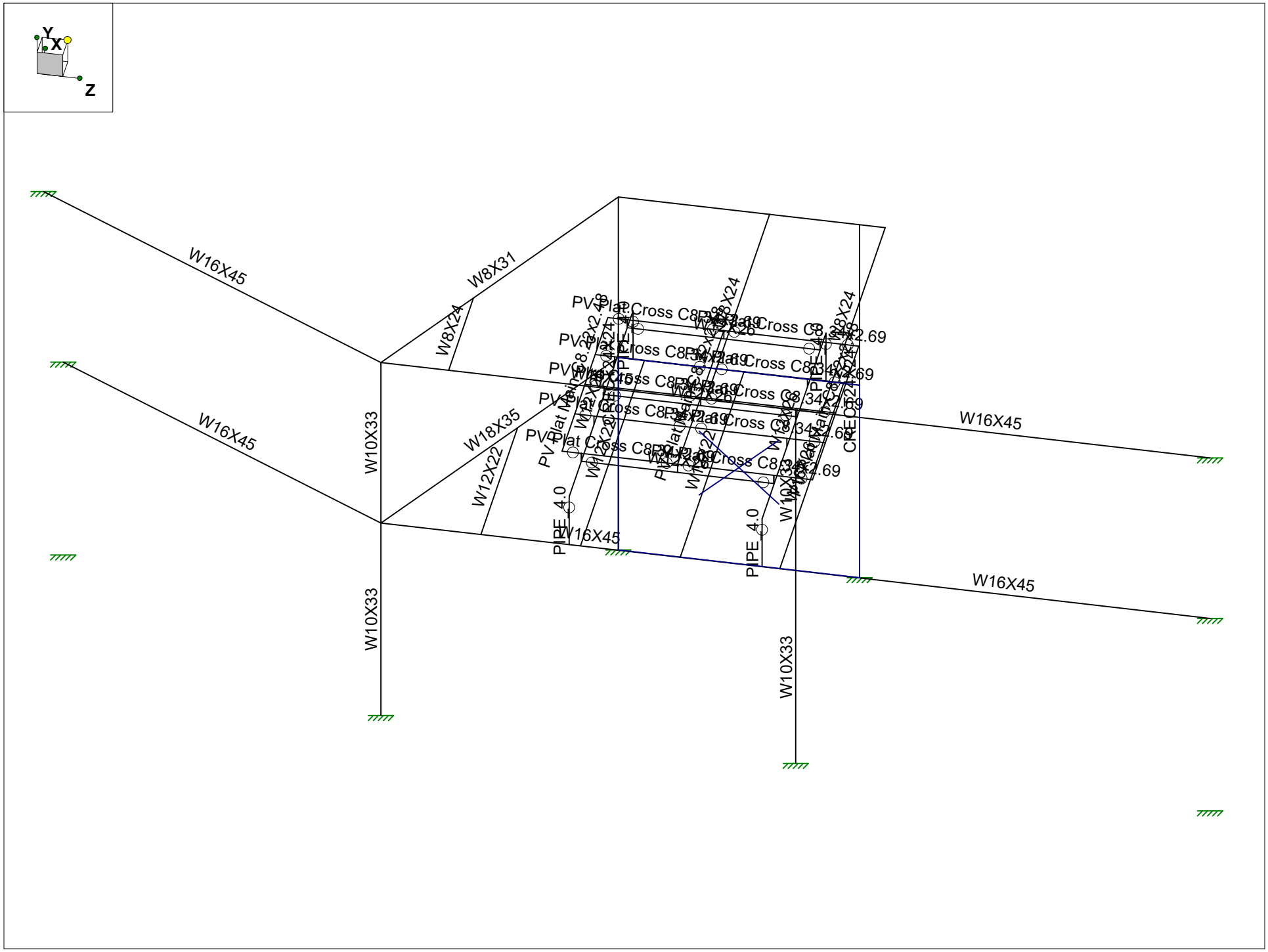
Y
X
Z
W16X45
W8X31
W8X24
W16X45
W10X33
W18X35
W12X22
W16X45
W10X33
W16X45
W16X45
W10X33
PIPE_4.0
PIPE_4.0

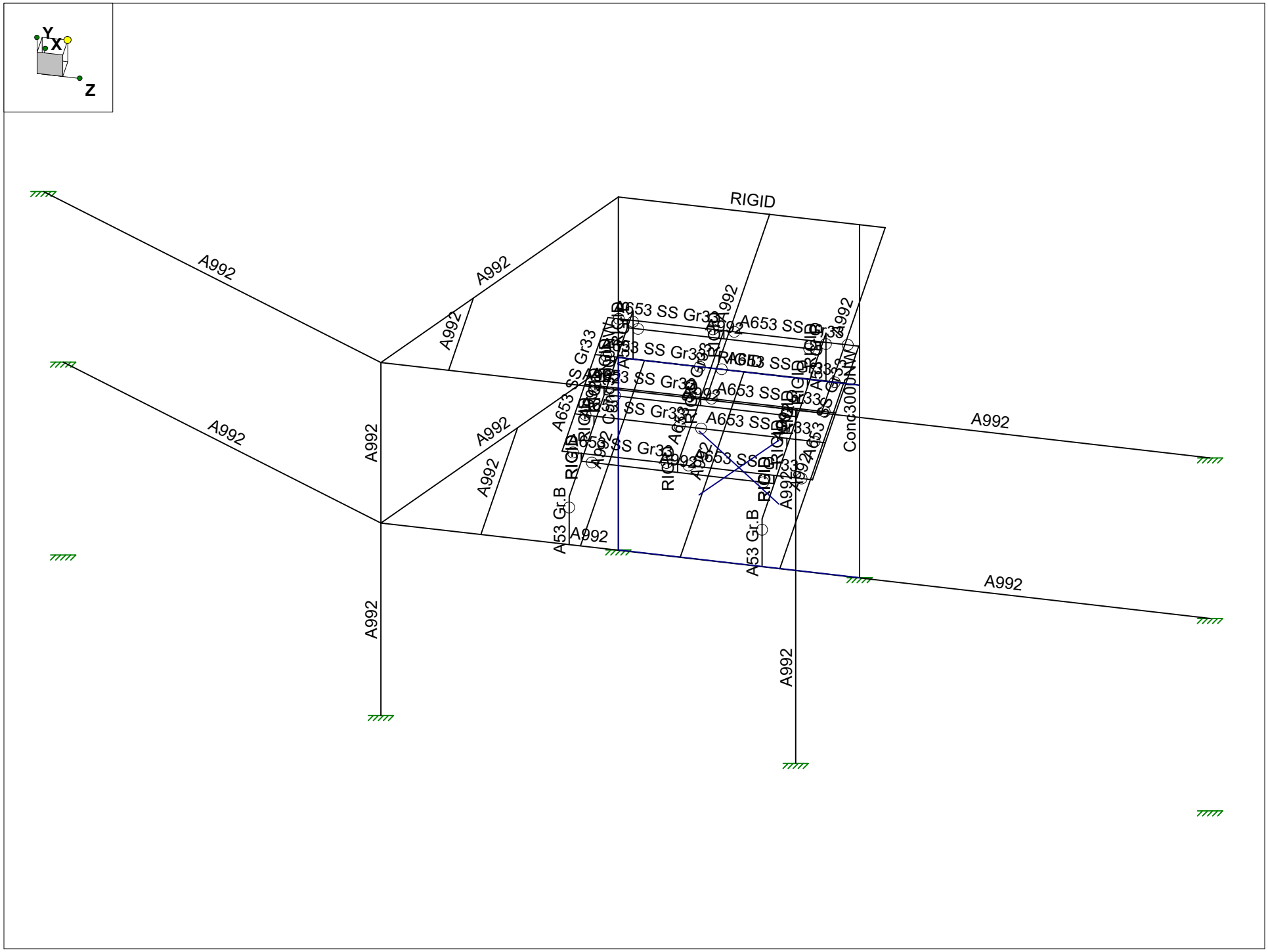
Y
X
Z
RIGID
A992
A653 SS Gr33
A53 Gr.B
Cond300mm

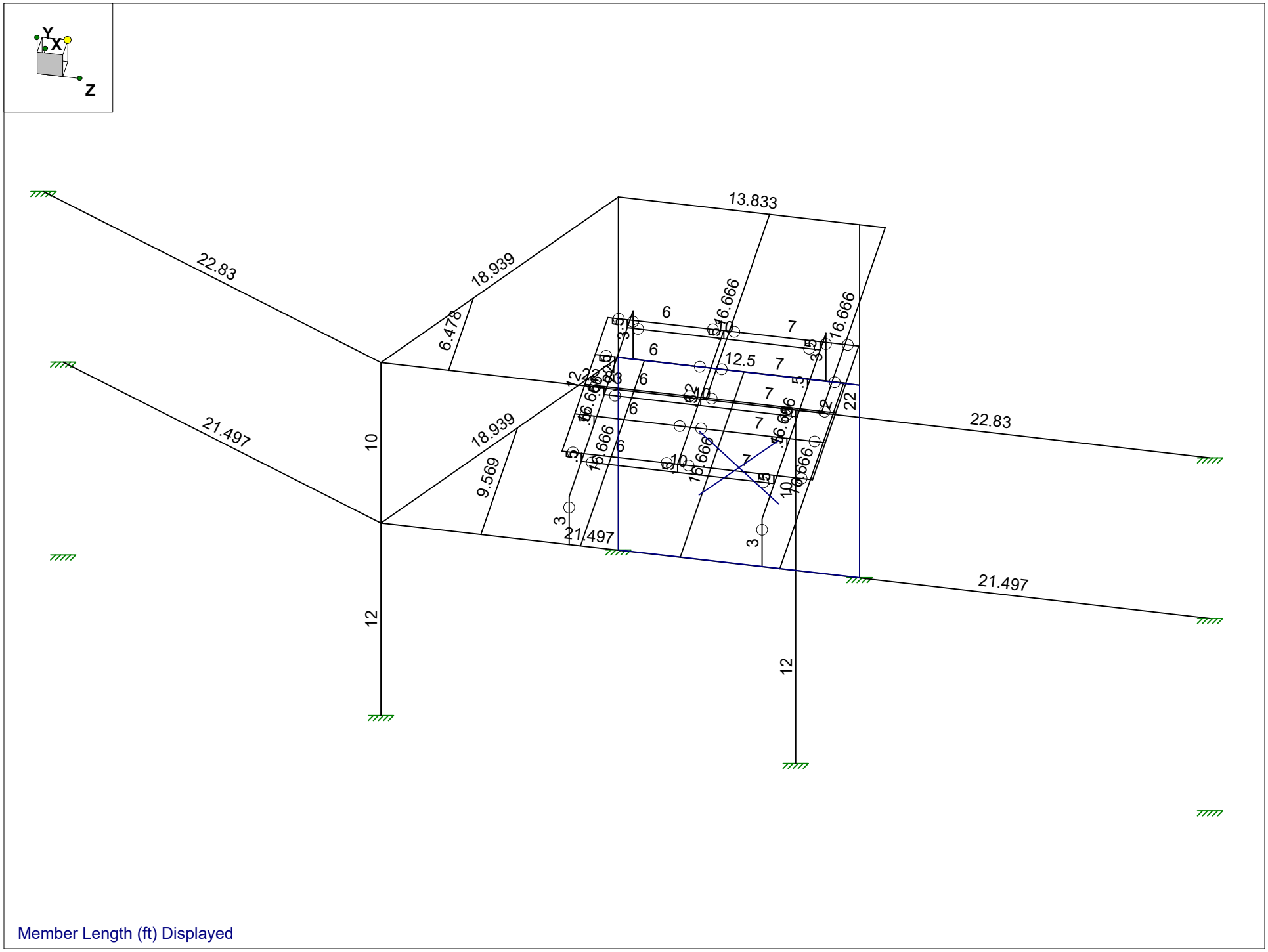
Y
X
Z
13.833
22.83
18.939
6.478
21.497
18.939
9.569
10
12
12
22.83
21.497
16.666
12.5
6
7
3
22
Member Length (ft) Displayed

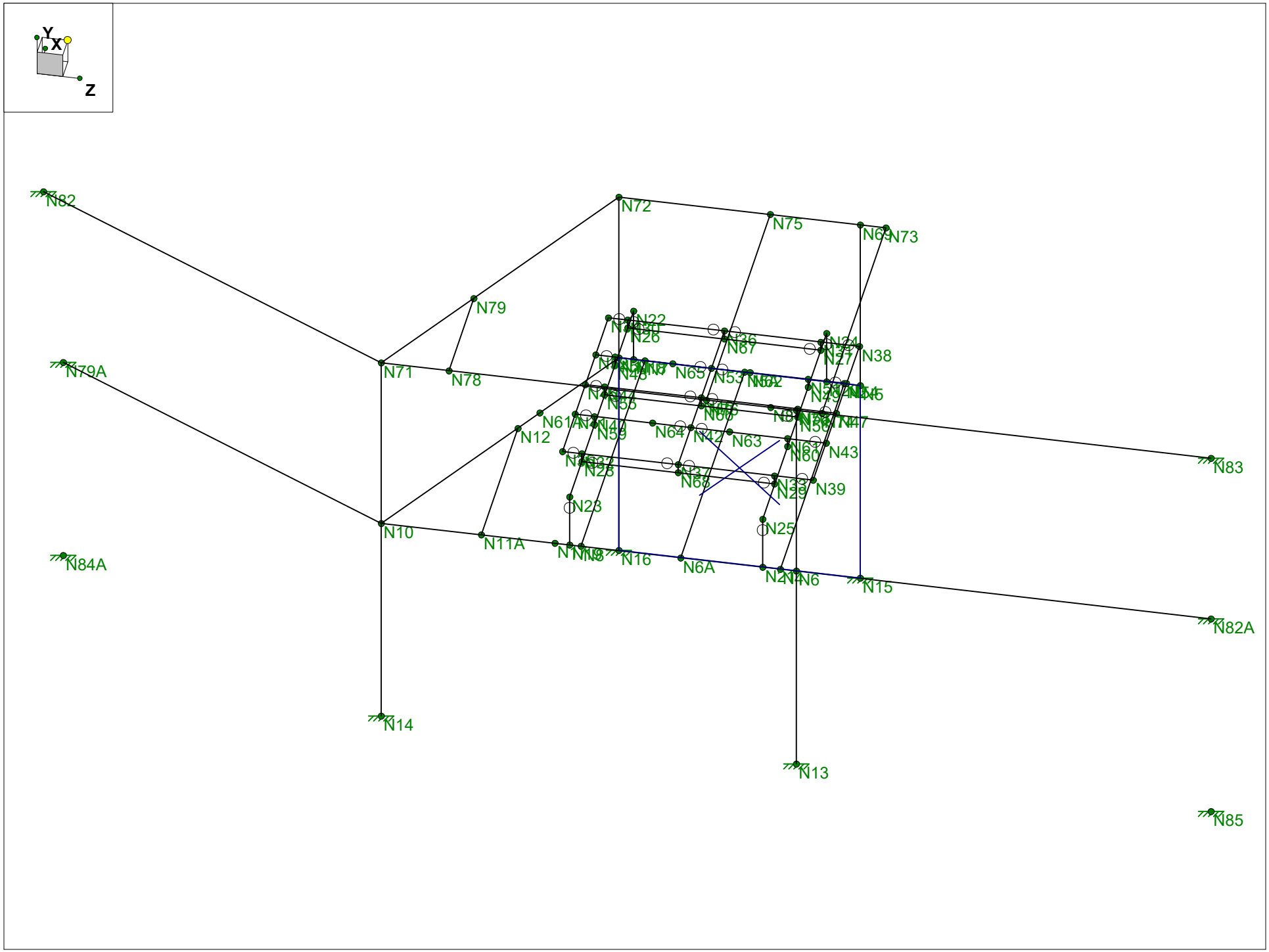

Y
X
Z
N82
N72
N75
N73
N79
N22
N26
N36
N67
N38
N79A
N71
N78
N65
N53
N27
N55
N61A
N12
N59
N64
N42
N63
N43
N83
N28
N68
N39
N29
N23
N25
N10
N11A
N16
N6A
N6
N15
N84A
N82A
N14
N13
N85

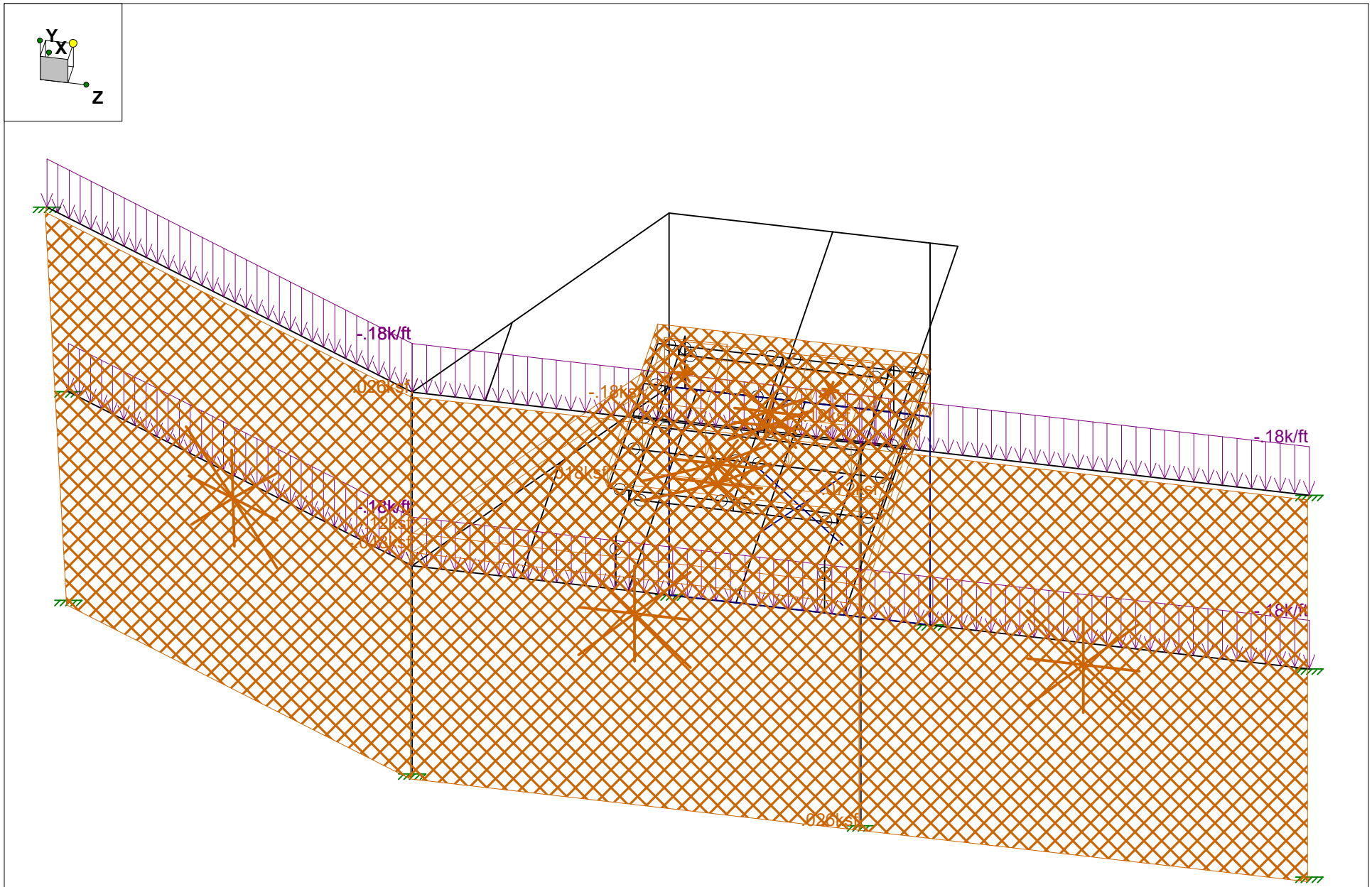
Y
X
Z
-.18k/ft
-.18k/ft
-.18k/ft

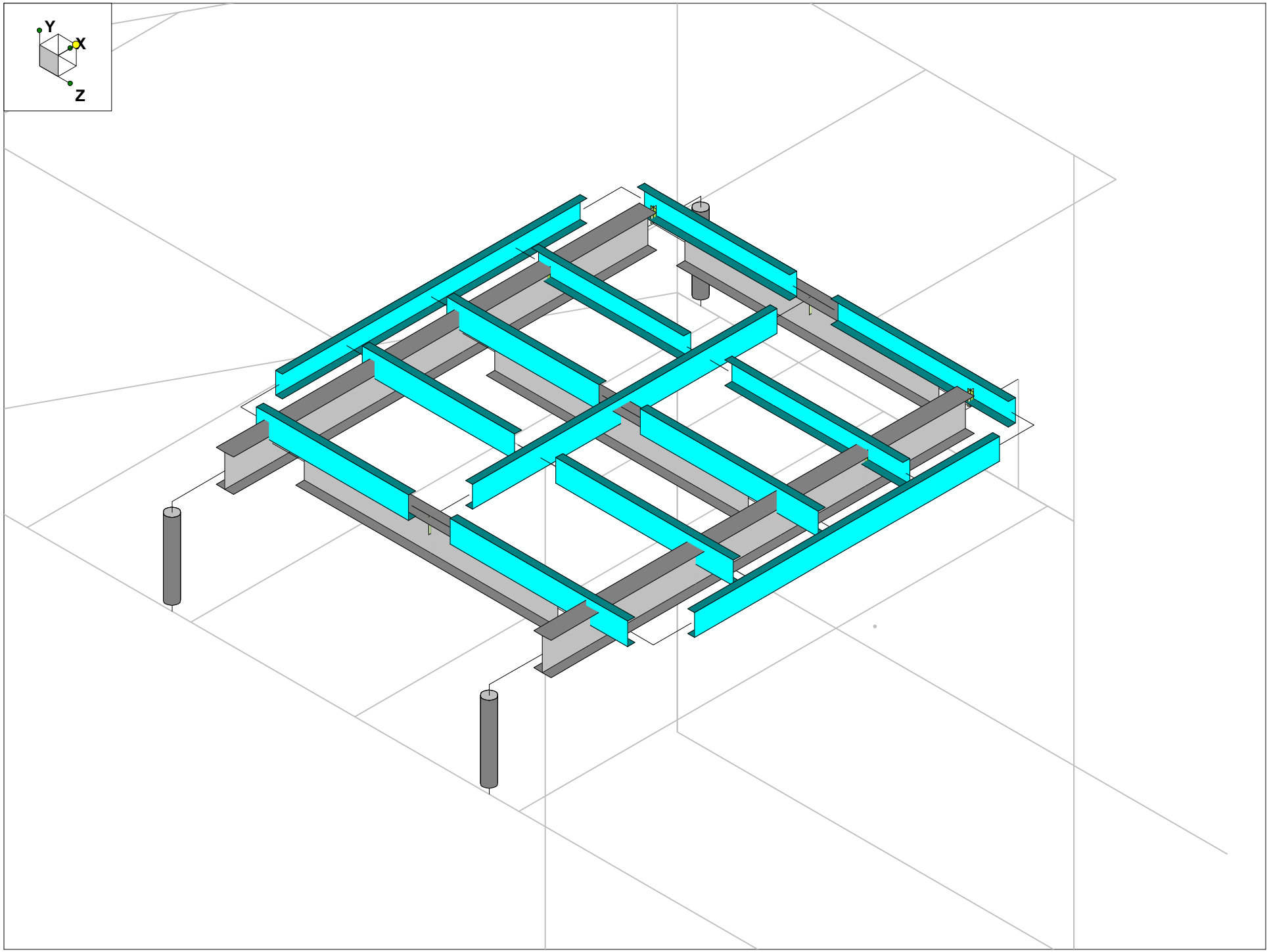
Y
X
Z

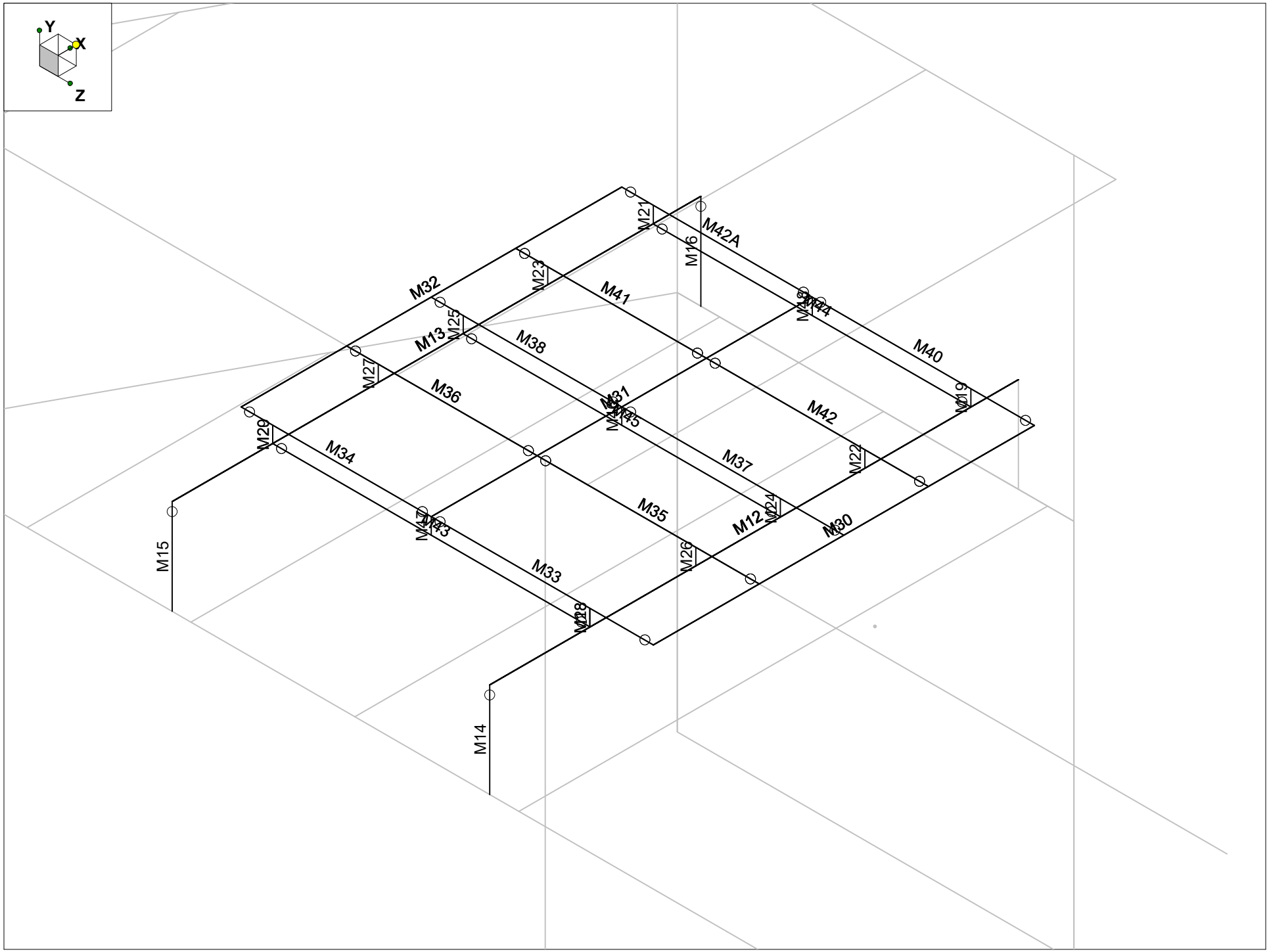
Y
X
Z
M32
M23
M21
M42A
M16
M41
M13
M25
M38
M40
M27
M36
M42
M29
M34
M37
M22
M35
M12
M30
M15
M33
M26
M14

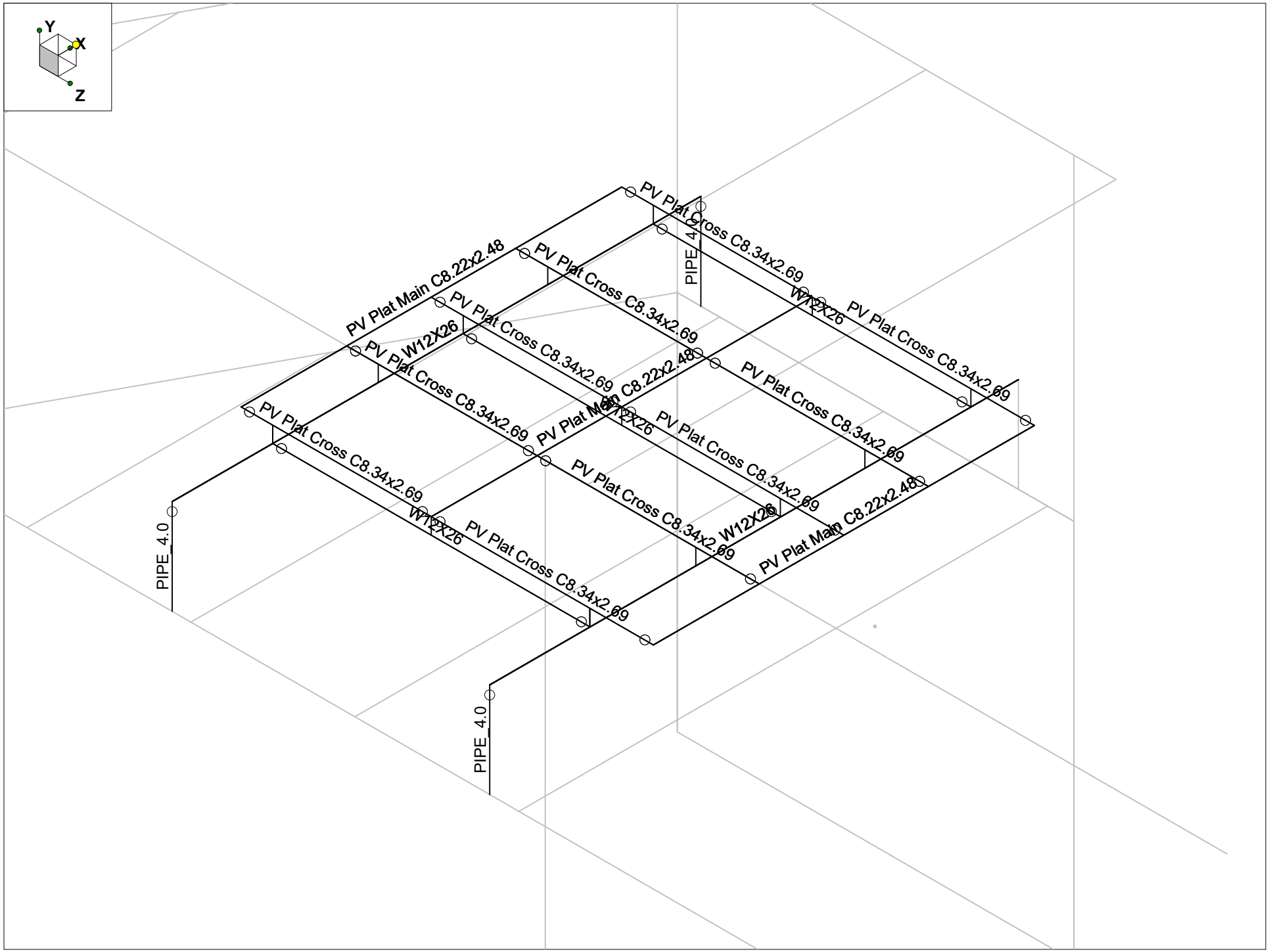
Y
X
Z
PV Plat Main C8.22x2.48
PV Plat Cross C8.34x2.69
W12X26
PIPE_4.0

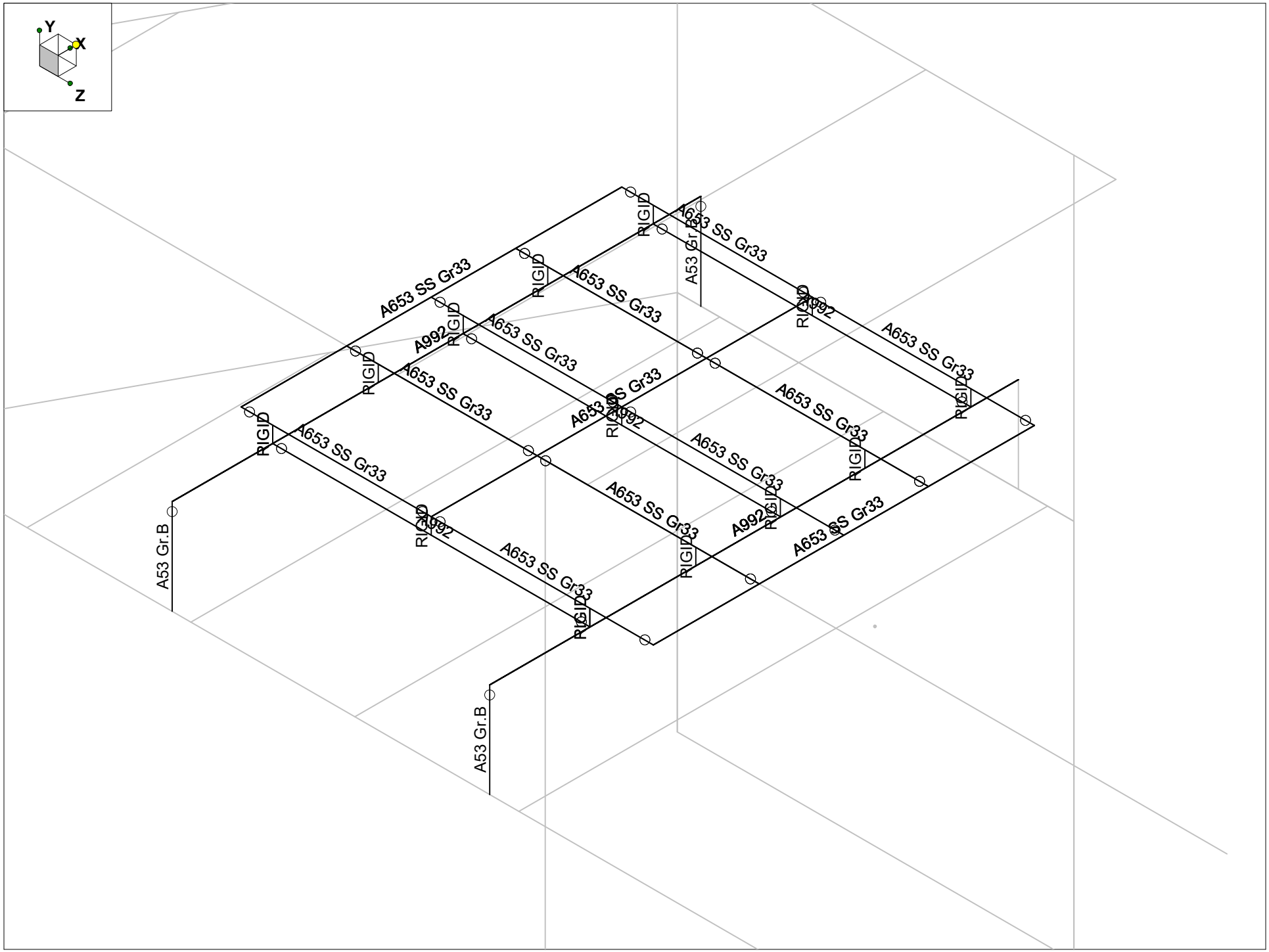
Y
X
Z
A653 SS Gr33
A992
RIGID
A53 Gr.B

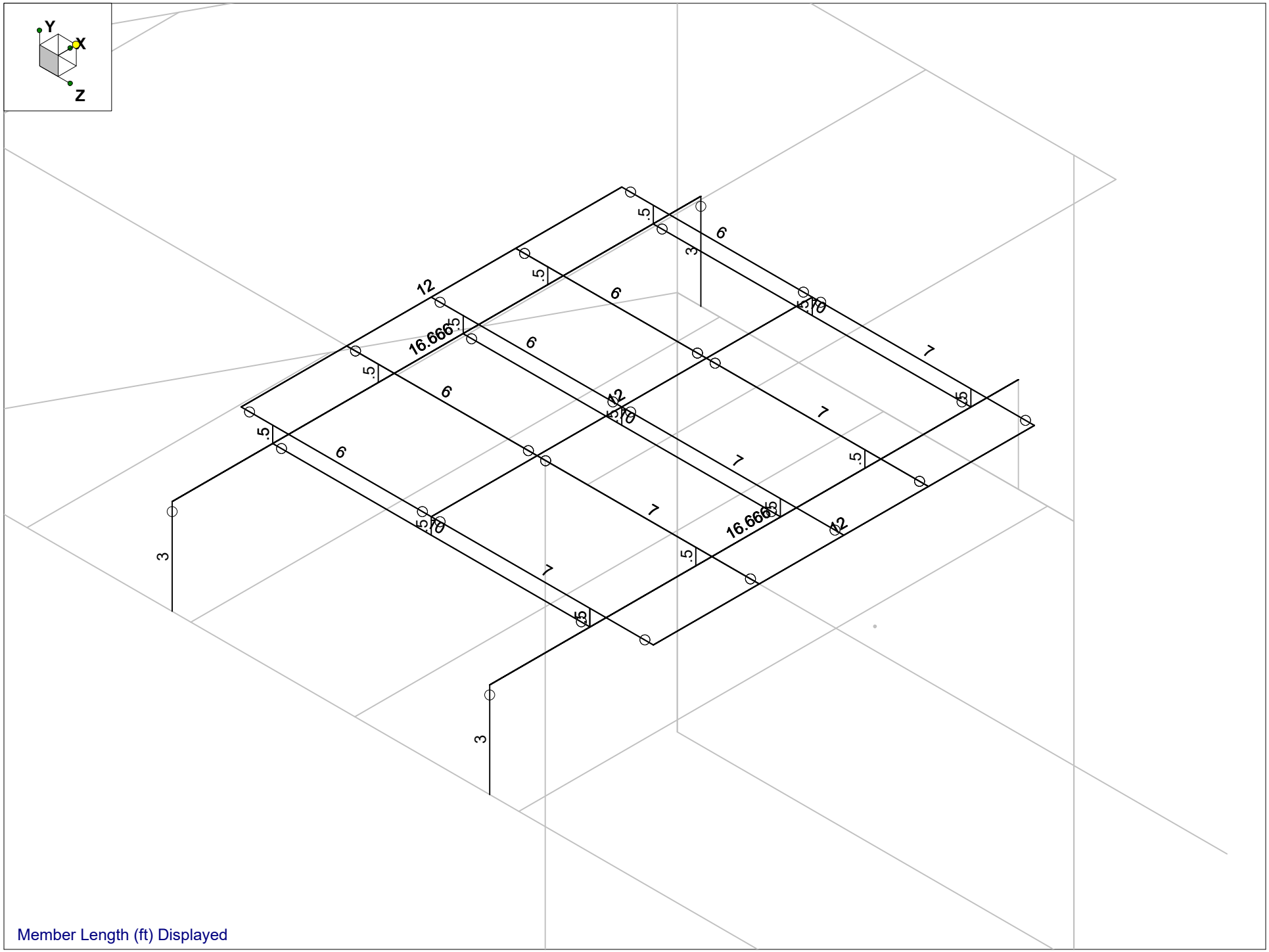
Y
X
Z
12
16.666
6
7
.5
3
Member Length (ft) Displayed

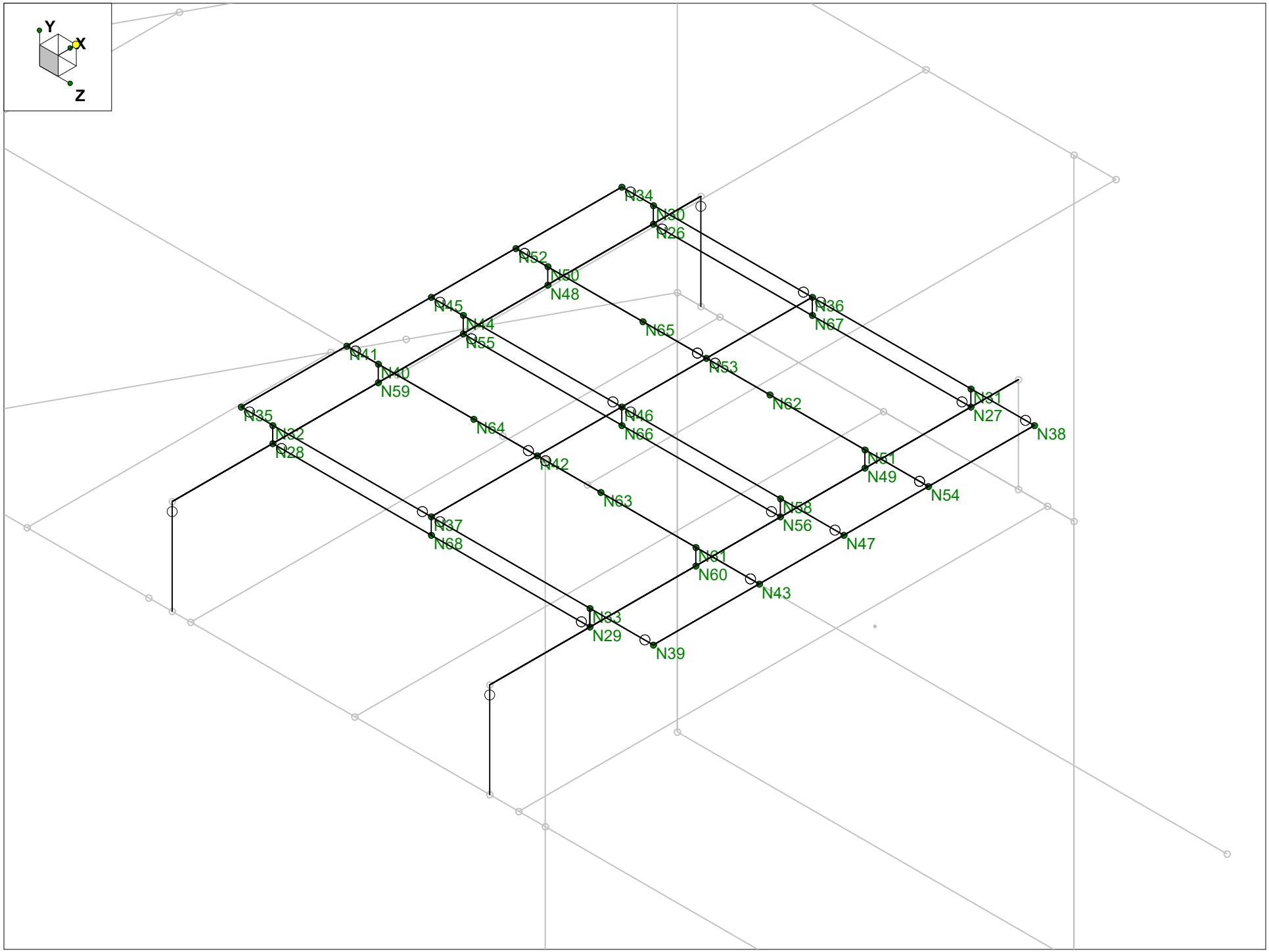
Y
X
Z
N34
N30
N26
N52
N50
N48
N45
N44
N55
N65
N36
N67
N41
N40
N59
N53
N62
N31
N27
N38
N35
N32
N28
N64
N46
N66
N42
N63
N51
N49
N54
N58
N56
N47
N37
N68
N61
N60
N43
N33
N29
N39

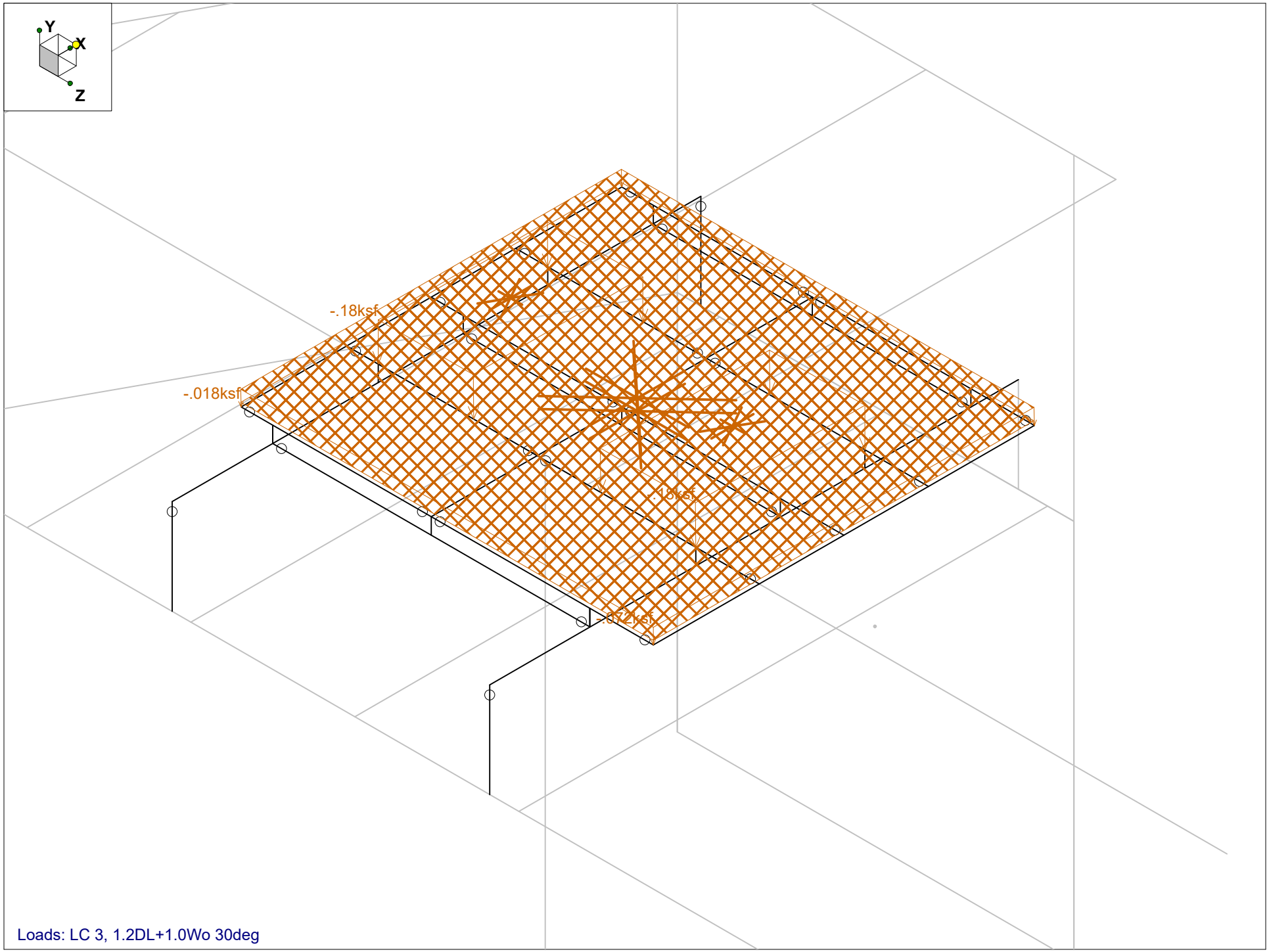

Loads: LC 3, 1.2DL+1.0Wo 30deg

(Global) Model Settings

Display Sections for Member Calcs	5
Max Internal Sections for Member Calcs	97
Include Shear Deformation?	Yes
Increase Nailing Capacity for Wind?	Yes
Include Warping?	Yes
Trans Load Btwn Intersecting Wood Wall?	Yes
Area Load Mesh (in^2)	144
Merge Tolerance (in)	.12
P-Delta Analysis Tolerance	0.50%
Include P-Delta for Walls?	Yes
Automatically Iterate Stiffness for Walls?	Yes
Max Iterations for Wall Stiffness	3
Gravity Acceleration (ft/sec^2)	32.2
Wall Mesh Size (in)	24
Eigensolution Convergence Tol. (1.E-)	4
Vertical Axis	Y
Global Member Orientation Plane	XZ
Static Solver	Sparse Accelerated
Dynamic Solver	Accelerated Solver

Hot Rolled Steel Code	AISC 14th(360-10): LRFD
Adjust Stiffness?	Yes(Iterative)
RISAConnection Code	AISC 14th(360-10): LRFD
Cold Formed Steel Code	AISI S100-12: LRFD
Wood Code	AWC NDS-15: ASD
Wood Temperature	< 100F
Concrete Code	ACI 318-14
Masonry Code	ACI 530-13: ASD
Aluminum Code	AA ADM1-15: ASD - Building
Stainless Steel Code	AISC 14th(360-10): ASD
Adjust Stiffness?	Yes(Iterative)

Number of Shear Regions	4
Region Spacing Increment (in)	4
Biaxial Column Method	Exact Integration
Parme Beta Factor (PCA)	.65
Concrete Stress Block	Rectangular
Use Cracked Sections?	Yes
Use Cracked Sections Slab?	Yes
Bad Framing Warnings?	No
Unused Force Warnings?	Yes
Min 1 Bar Diam. Spacing?	No
Concrete Rebar Set	REBAR_SET_ASTMA615
Min % Steel for Column	1
Max % Steel for Column	8

(Global) Model Settings, Continued

Seismic Code	ASCE 7-10
Seismic Base Elevation (ft)	Not Entered
Add Base Weight?	Yes
Ct X	.02
Ct Z	.02
T X (sec)	Not Entered
T Z (sec)	Not Entered
R X	3
R Z	3
Ct Exp. X	.75
Ct Exp. Z	.75
SD1	1
SDS	1
S1	1
TL (sec)	5
Risk Cat	I or II
Drift Cat	Other
Om Z	1
Om X	1
Cd Z	4
Cd X	4
Rho Z	1
Rho X	1

Hot Rolled Steel Section Sets

	Label	Shape	Type	Design List	Material	Design Rul...	A [in2]	Iyy [in4]	Izz [in4]	J [in4]
1	Main Beams	W12X26	Beam	Wide Flange	A992	Typical	7.65	17.3	204	.3
2	Support Be...	W8X15	Beam	Wide Flange	A992	Typical	4.44	3.41	48	.137
3	Columns	PIPE_4.0	Column	Pipe	A53 Gr.B	Typical	2.96	6.82	6.82	13.6

Joint Coordinates and Temperatures

	Label	X [ft]	Y [ft]	Z [ft]	Temp [F]	Detach From Diap...
1	N2	0	0	12	0	
2	N4	-16.666	0	12	0	
3	N5	0	0	12.833	0	
4	N6	-16.666	0	12.833	0	
5	N5A	0	0	6.834	0	
6	N6A	-16.666	0	6.834	0	
7	N7	0	0	1.668	0	
8	N8	-16.666	0	1.668	0	
9	N10	-16.666	0	-8.664	0	
10	N11	0	0	0.333	0	
11	N11A	-16.666	0	-3.498	0	
12	N12	-7.096526	0	-3.498	0	
13	N13	-16.666	-12	12.833	0	
14	N14	-16.666	-12	-8.664	0	
15	N15	0	-12	12.833	0	
16	N16	0	-12	0.333	0	
17	N17	-16.666	0	0.333	0	
18	N18	0	0	1.083	0	

Joint Coordinates and Temperatures (Continued)

	Label	X [ft]	Y [ft]	Z [ft]	Temp [F]	Detach From Diap...
19	N19	-16.666	0	1.083	0	
20	N20	0	0	11.083	0	
21	N21	-16.666	0	11.083	0	
22	N22	0	3	1.083	0	
23	N23	-16.666	3	1.083	0	
24	N24	0	3	11.083	0	
25	N25	-16.666	3	11.083	0	
26	N26	-1.5	3	1.083	0	
27	N27	-1.5	3	11.083	0	
28	N28	-13.5	3	1.083	0	
29	N29	-13.5	3	11.083	0	
30	N30	-1.5	3.5	1.083	0	
31	N31	-1.5	3.5	11.083	0	
32	N32	-13.5	3.5	1.083	0	
33	N33	-13.5	3.5	11.083	0	
34	N34	-1.5	3.5	0.083	0	
35	N35	-13.5	3.5	0.083	0	
36	N36	-1.5	3.5	6.083	0	
37	N37	-13.5	3.5	6.083	0	
38	N38	-1.5	3.5	13.083	0	
39	N39	-13.5	3.5	13.083	0	
40	N40	-10.167	3.5	1.083	0	
41	N41	-10.167	3.5	0.083	0	
42	N42	-10.167	3.5	6.083	0	
43	N43	-10.167	3.5	13.083	0	
44	N44	-7.5	3.5	1.083	0	
45	N45	-7.5	3.5	0.083	0	
46	N46	-7.5	3.5	6.083	0	
47	N47	-7.5	3.5	13.083	0	
48	N48	-4.833	3	1.083	0	
49	N49	-4.833	3	11.083	0	
50	N50	-4.833	3.5	1.083	0	
51	N51	-4.833	3.5	11.083	0	
52	N52	-4.833	3.5	0.083	0	
53	N53	-4.833	3.5	6.083	0	
54	N54	-4.833	3.5	13.083	0	
55	N55	-7.5	3	1.083	0	
56	N56	-7.5	3	11.083	0	
57	N58	-7.5	3.5	11.083	0	
58	N59	-10.167	3	1.083	0	
59	N60	-10.167	3	11.083	0	
60	N61	-10.167	3.5	11.083	0	
61	N61A	-5.555333	0	-2.666	0	
62	N62	-4.833	3.5	8.083	0	
63	N63	-10.167	3.5	8.083	0	
64	N64	-10.167	3.5	4.083	0	
65	N65	-4.833	3.5	4.083	0	
66	N66	-7.5	3	6.083	0	
67	N67	-1.5	3	6.083	0	
68	N68	-13.5	3	6.083	0	
69	N69	0	10	12.833	0	
70	N70	-16.666	10	12.833	0	

Joint Coordinates and Temperatures (Continued)

	Label	X [ft]	Y [ft]	Z [ft]	Temp [F]	Detach From Diap...
71	N71	-16.666	10	-8.664	0	
72	N72	0	10	0.333	0	
73	N73	0	10	14.166	0	
74	N74	-16.666	10	14.166	0	
75	N75	0	10	8.166	0	
76	N76	-16.666	10	8.166	0	
77	N78	-16.666	10	-5.167	0	
78	N79	-10.188174	10	-5.167	0	
79	N79A	-5.9175	0	-27.280948	0	
80	N82	-5.251	10	-28.43536	0	
81	N82A	-16.666	0	34.33	0	
82	N83	-16.666	10	34.33	0	
83	N84	-16.666	10	11.5	0	
84	N84A	-5.9175	-12	-27.280948	0	
85	N85	-16.666	-12	34.33	0	

Hot Rolled Steel Properties

	Label	E [ksi]	G [ksi]	Nu	Therm (/1E...	Density[k/ft...	Yield[ksi]	Ry	Fu[ksi]	Rt
1	A992	29000	11154	.3	.65	.49	50	1.1	65	1.1
2	A36 Gr.36	29000	11154	.3	.65	.49	36	1.5	58	1.2
3	A572 Gr.50	29000	11154	.3	.65	.49	50	1.1	65	1.1
4	A500 Gr.B RND	29000	11154	.3	.65	.527	42	1.4	58	1.3
5	A500 Gr.B Rect	29000	11154	.3	.65	.527	46	1.4	58	1.3
6	A53 Gr.B	29000	11154	.3	.65	.49	35	1.6	60	1.2
7	A1085	29000	11154	.3	.65	.49	50	1.4	65	1.3

Cold Formed Steel Properties

	Label	E [ksi]	G [ksi]	Nu	Therm (/1E5 F)	Density[k/ft^3]	Yield[ksi]	Fu[ksi]
1	A653 SS Gr33	29500	11346	.3	.65	.49	33	45
2	A653 SS Gr50/1	29500	11346	.3	.65	.49	50	65

Member Primary Data

	Label	I Joint	J Joint	K Joint	Rotate(deg)	Section/Shape	Type	Design List	Material	Design Rules
1	M1	N5	N11			RIGID	None	None	RIGID	Typical
2	M3	N10	N6			W16X45	None	None	A992	Typical
3	M4A	N11	N10			W18X35	None	None	A992	Typical
4	M5	N4	N2			W16X26	Beam	Wide Flange	A992	Typical
5	18KCS2 (3)	N11A	N12			W12X22	Beam	Wide Flange	A992	Typical
6	18KCS2 (2)	N8	N7			W12X22	Beam	Wide Flange	A992	Typical
7	18KCS2 (1)	N6A	N5A			W12X22	Beam	Wide Flange	A992	Typical
8	M8A	N13	N6			W10X33	Column	Wide Flange	A992	Typical
9	M9	N14	N10			W10X33	Column	Wide Flange	A992	Typical
10	M10	N15	N69			CRECT24X24	Column	Rectangular	Conc3000...	Typical
11	M11	N16	N72			CRECT24X24	Column	Rectangular	Conc3000...	Typical
12	M12	N25	N24			Main Beams	Beam	Wide Flange	A992	Typical
13	M13	N23	N22			Main Beams	Beam	Wide Flange	A992	Typical
14	M14	N25	N21			Columns	Column	Pipe	A53 Gr.B	Typical

Member Primary Data (Continued)

	Label	I Joint	J Joint	K Joint	Rotate(deg)	Section/Shape	Type	Design List	Material	Design Rules
15	M15	N23	N19			Columns	Column	Pipe	A53 Gr.B	Typical
16	M16	N22	N18			Columns	Column	Pipe	A53 Gr.B	Typical
17	M17	N24	N20			Columns	Column	Pipe	A53 Gr.B	Typical
18	M18	N29	N33			RIGID	None	None	RIGID	Typical
19	M19	N27	N31			RIGID	None	None	RIGID	Typical
20	M20	N28	N32			RIGID	None	None	RIGID	Typical
21	M21	N26	N30			RIGID	None	None	RIGID	Typical
22	M22	N49	N51			RIGID	None	None	RIGID	Typical
23	M23	N48	N50			RIGID	None	None	RIGID	Typical
24	M24	N56	N58			RIGID	None	None	RIGID	Typical
25	M25	N55	N44			RIGID	None	None	RIGID	Typical
26	M26	N60	N61			RIGID	None	None	RIGID	Typical
27	M27	N59	N40			RIGID	None	None	RIGID	Typical
28	M28	N29	N33			RIGID	None	None	RIGID	Typical
29	M29	N28	N32			RIGID	None	None	RIGID	Typical
30	M30	N38	N39			PV Plat Main ...	Beam	CU	A653 SS ...	Typical
31	M31	N36	N37			PV Plat Main ...	Beam	CU	A653 SS ...	Typical
32	M32	N35	N34			PV Plat Main ...	Beam	CU	A653 SS ...	Typical
33	M33	N39	N37			PV Plat Cross ...	Beam	CU	A653 SS ...	Typical
34	M34	N37	N35			PV Plat Cross ...	Beam	CU	A653 SS ...	Typical
35	M35	N43	N42			PV Plat Cross ...	Beam	CU	A653 SS ...	Typical
36	M36	N42	N41			PV Plat Cross ...	Beam	CU	A653 SS ...	Typical
37	M37	N47	N46			PV Plat Cross ...	Beam	CU	A653 SS ...	Typical
38	M38	N46	N45			PV Plat Cross ...	Beam	CU	A653 SS ...	Typical
39	M40	N36	N38			PV Plat Cross ...	Beam	CU	A653 SS ...	Typical
40	M41	N52	N53			PV Plat Cross ...	Beam	CU	A653 SS ...	Typical
41	M42	N53	N54			PV Plat Cross ...	Beam	CU	A653 SS ...	Typical
42	M42A	N34	N36			PV Plat Cross ...	Beam	CU	A653 SS ...	Typical
43	M43	N29	N28			Main Beams	Beam	Wide Flange	A992	Typical
44	M44	N27	N26			Main Beams	Beam	Wide Flange	A992	Typical
45	M45	N55	N56			Main Beams	Beam	Wide Flange	A992	Typical
46	M46	N66	N46			RIGID	None	None	RIGID	Typical
47	M47	N68	N37			RIGID	None	None	RIGID	Typical
48	M48	N67	N36			RIGID	None	None	RIGID	Typical
49	M49	N73	N72			RIGID	None	None	RIGID	Typical
50	M50	N71	N74			W16X45	None	None	A992	Typical
51	M51	N6	N70			W10X33	Column	Wide Flange	A992	Typical
52	M52	N10	N71			W10X33	Column	Wide Flange	A992	Typical
53	M53	N74	N73			W8X24	Beam	Wide Flange	A992	Typical
54	M54	N76	N75			W8X24	Beam	Wide Flange	A992	Typical
55	M55	N78	N79			W8X24	Beam	Wide Flange	A992	Typical
56	M56	N71	N72			W8X31	Beam	Wide Flange	A992	Typical
57	M57	N10	N79A			W16X45	None	None	A992	Typical
58	M58	N71	N82			W16X45	None	None	A992	Typical
59	M59	N82A	N6			W16X45	None	None	A992	Typical
60	M60	N83	N84			W16X45	None	None	A992	Typical

Hot Rolled Steel Design Parameters

	Label	Shape	Length[ft]	Lbyy[ft]	Lbzz[ft]	Lcomp top[ft]	Lcomp bot[ft]	L-torqu...	Kyy	Kzz	Cb	Function
1	M3	W16X45	21.497									Lateral
2	M4A	W18X35	18.939									Lateral
3	M5	W16X26	16.666			Lbyy						Lateral
4	18KCS2 (3)	W12X22	9.569			Lbyy						Lateral
5	18KCS2 (2)	W12X22	16.666			Lbyy						Lateral
6	18KCS2 (1)	W12X22	16.666			Lbyy						Lateral
7	M8A	W10X33	12									Lateral
8	M9	W10X33	12									Lateral
9	M12	Main Beams	16.666	Segment	Segment	Lbyy						Lateral
10	M13	Main Beams	16.666	Segment	Segment	Lbyy						Lateral
11	M14	Columns	3									Lateral
12	M15	Columns	3									Lateral
13	M16	Columns	3									Lateral
14	M17	Columns	3									Lateral
15	M43	Main Beams	10			Lbyy						Lateral
16	M44	Main Beams	10			Lbyy						Lateral
17	M45	Main Beams	10			Lbyy						Lateral
18	M50	W16X45	22.83									Lateral
19	M51	W10X33	10									Lateral
20	M52	W10X33	10									Lateral
21	M53	W8X24	16.666			Lbyy						Lateral
22	M54	W8X24	16.666			Lbyy						Lateral
23	M55	W8X24	6.478			Lbyy						Lateral
24	M56	W8X31	18.939			Lbyy						Lateral
25	M57	W16X45	21.497									Lateral
26	M58	W16X45	22.83									Lateral
27	M59	W16X45	21.497									Lateral
28	M60	W16X45	22.83									Lateral

Cold Formed Steel Design Parameters

	Label	Shape	Lengt...	Lbyy[ft]	Lbzz[ft]	Lcomp t...	Lcomp ...	L-torque...	Kyy	Kzz	Cm-...	Cm-...	Cb	R	a[ft]	y sw...	z sw...
1	M30	PV Plat ...	12	Segment	Segment	Lbyy											
2	M31	PV Plat ...	12	Segment	Segment	Lbyy											
3	M32	PV Plat ...	12	Segment	Segment	Lbyy											
4	M33	PV Plat ...	7	1	1	Lbyy											
5	M34	PV Plat ...	6	1	1	Lbyy											
6	M35	PV Plat ...	7	Segment	Segment	Lbyy											
7	M36	PV Plat ...	6	Segment	Segment	Lbyy											
8	M37	PV Plat ...	7	Segment	Segment	Lbyy											
9	M38	PV Plat ...	6	Segment	Segment	Lbyy											
10	M40	PV Plat ...	7	1	1	Lbyy											
11	M41	PV Plat ...	6	Segment	Segment	Lbyy											
12	M42	PV Plat ...	7	Segment	Segment	Lbyy											
13	M42A	PV Plat ...	6	1	1	Lbyy											

Joint Loads and Enforced Displacements

Joint Label	L,D,M	Direction	Magnitude[(k,k-ft), (in,rad), (k*s^2/f...
No Data to Print ...			

Member Distributed Loads (BLC 2 : DL)

	Member Label	Direction	Start Magnitude[k/ft,...	End Magnitude[k/ft,...	Start Location[ft,%]	End Location[ft,%]
1	M3	Y	.15	.15	0	0
2	M50	Y	.15	.15	0	0
3	M57	Y	.15	.15	0	0
4	M58	Y	.15	.15	0	0
5	M59	Y	.15	.15	0	0
6	M60	Y	.15	.15	0	0

Member Distributed Loads (BLC 12 : BLC 2 Transient Area Loads)

	Member Label	Direction	Start Magnitude[k/ft,...	End Magnitude[k/ft,...	Start Location[ft,%]	End Location[ft,%]
1	M1	Y	.006	.112	0	2.083
2	M1	Y	.112	.167	2.083	4.167
3	M1	Y	.167	.15	4.167	6.25
4	M1	Y	.15	.124	6.25	8.333
5	M1	Y	.124	.074	8.333	10.417
6	M1	Y	.074	.006	10.417	12.5
7	M3	Y	.005	.117	0	2.15
8	M3	Y	.117	.092	2.15	4.299
9	M3	Y	.092	.101	4.299	6.449
10	M3	Y	.101	.12	6.449	8.599
11	M3	Y	.12	.083	8.599	10.748
12	M3	Y	.083	.125	10.748	12.898
13	M3	Y	.125	.094	12.898	15.048
14	M3	Y	.094	.173	15.048	17.198
15	M3	Y	.173	.173	17.198	19.347
16	M3	Y	.173	.005	19.347	21.497
17	M4A	Y	.025	.126	0	2.104
18	M4A	Y	.126	.187	2.104	4.209
19	M4A	Y	.187	.193	4.209	6.313
20	M4A	Y	.193	.112	6.313	8.418
21	M4A	Y	.112	.059	8.418	10.522
22	M4A	Y	.059	.13	10.522	12.626
23	M4A	Y	.13	.166	12.626	14.731
24	M4A	Y	.166	.123	14.731	16.835
25	M4A	Y	.123	.059	16.835	18.939
26	M5	Y	.072	.27	0	2.083
27	M5	Y	.27	.388	2.083	4.167
28	M5	Y	.388	.389	4.167	6.25
29	M5	Y	.389	.39	6.25	8.333
30	M5	Y	.39	.39	8.333	10.416
31	M5	Y	.39	.39	10.416	12.499
32	M5	Y	.39	.288	12.499	14.583
33	M5	Y	.288	.045	14.583	16.666
34	18KCS2 (3)	Y	.127	.334	0	1.914
35	18KCS2 (3)	Y	.334	.411	1.914	3.828
36	18KCS2 (3)	Y	.411	.369	3.828	5.742
37	18KCS2 (3)	Y	.369	.31	5.742	7.656
38	18KCS2 (3)	Y	.31	.225	7.656	9.569
39	18KCS2 (2)	Y	.134	.374	0	2.083
40	18KCS2 (2)	Y	.374	.572	2.083	4.167
41	18KCS2 (2)	Y	.572	.587	4.167	6.25

Member Distributed Loads (BLC 12 : BLC 2 Transient Area Loads) (Continued)

	Member Label	Direction	Start Magnitude[k/ft,...	End Magnitude[k/ft,...	Start Location[ft,%]	End Location[ft,%]
42	18KCS2 (2)	Y	.587	.512	6.25	8.333
43	18KCS2 (2)	Y	.512	.438	8.333	10.416
44	18KCS2 (2)	Y	.438	.426	10.416	12.499
45	18KCS2 (2)	Y	.426	.331	12.499	14.583
46	18KCS2 (2)	Y	.331	.043	14.583	16.666
47	18KCS2 (1)	Y	.064	.343	0	2.083
48	18KCS2 (1)	Y	.343	.495	2.083	4.167
49	18KCS2 (1)	Y	.495	.497	4.167	6.25
50	18KCS2 (1)	Y	.497	.505	6.25	8.333
51	18KCS2 (1)	Y	.505	.535	8.333	10.416
52	18KCS2 (1)	Y	.535	.535	10.416	12.499
53	18KCS2 (1)	Y	.535	.368	12.499	14.583
54	18KCS2 (1)	Y	.368	.05	14.583	16.666
55	M30	Y	.008	.013	0	3
56	M30	Y	.013	.016	3	6
57	M30	Y	.016	.013	6	9
58	M30	Y	.013	.008	9	12
59	M31	Y	.014	.025	0	3
60	M31	Y	.025	.03	3	6
61	M31	Y	.03	.025	6	9
62	M31	Y	.025	.014	9	12
63	M32	Y	.006	.011	0	3
64	M32	Y	.011	.014	3	6
65	M32	Y	.014	.011	6	9
66	M32	Y	.011	.006	9	12
67	M33	Y	.007	.02	0	1.167
68	M33	Y	.02	.026	1.167	2.333
69	M33	Y	.026	.026	2.333	3.5
70	M33	Y	.026	.026	3.5	4.667
71	M33	Y	.026	.02	4.667	5.833
72	M33	Y	.02	.007	5.833	7
73	M34	Y	.007	.02	4.441e-16	1
74	M34	Y	.02	.026	1	2
75	M34	Y	.026	.026	2	3
76	M34	Y	.026	.026	3	4
77	M34	Y	.026	.02	4	5
78	M34	Y	.02	.007	5	6
79	M35	Y	-.001	.031	3.664e-15	1.167
80	M35	Y	.031	.048	1.167	2.333
81	M35	Y	.048	.048	2.333	3.5
82	M35	Y	.048	.048	3.5	4.667
83	M35	Y	.048	.031	4.667	5.833
84	M35	Y	.031	-.001	5.833	7
85	M36	Y	-.001	.031	6.661e-16	1
86	M36	Y	.031	.048	1	2
87	M36	Y	.048	.048	2	3
88	M36	Y	.048	.048	3	4
89	M36	Y	.048	.031	4	5
90	M36	Y	.031	-.001	5	6
91	M37	Y	.04	.04	1.167	5.833
92	M38	Y	.04	.04	1	5
93	M40	Y	.007	.02	6.661e-16	1.167

Member Distributed Loads (BLC 12 : BLC 2 Transient Area Loads) (Continued)

	Member Label	Direction	Start Magnitude[k/ft,...	End Magnitude[k/ft,...	Start Location[ft,%]	End Location[ft,%]
94	M40	Y	.02	.026	1.167	2.333
95	M40	Y	.026	.026	2.333	3.5
96	M40	Y	.026	.026	3.5	4.667
97	M40	Y	.026	.02	4.667	5.833
98	M40	Y	.02	.007	5.833	7
99	M41	Y	-.001	.031	0	1
100	M41	Y	.031	.048	1	2
101	M41	Y	.048	.048	2	3
102	M41	Y	.048	.048	3	4
103	M41	Y	.048	.031	4	5
104	M41	Y	.031	-.001	5	6
105	M42	Y	-.001	.031	2.554e-15	1.167
106	M42	Y	.031	.048	1.167	2.333
107	M42	Y	.048	.048	2.333	3.5
108	M42	Y	.048	.048	3.5	4.667
109	M42	Y	.048	.031	4.667	5.833
110	M42	Y	.031	-.001	5.833	7
111	M42A	Y	.007	.02	0	1
112	M42A	Y	.02	.026	1	2
113	M42A	Y	.026	.026	2	3
114	M42A	Y	.026	.026	3	4
115	M42A	Y	.026	.02	4	5
116	M42A	Y	.02	.007	5	6

Member Distributed Loads (BLC 13 : BLC 9 Transient Area Loads)

	Member Label	Direction	Start Magnitude[k/ft,...	End Magnitude[k/ft,...	Start Location[ft,%]	End Location[ft,%]
1	M1	Y	.005	.047	0	2.083
2	M1	Y	.047	.072	2.083	4.167
3	M1	Y	.072	.065	4.167	6.25
4	M1	Y	.065	.05	6.25	8.333
5	M1	Y	.05	.03	8.333	10.417
6	M1	Y	.03	.003	10.417	12.5
7	M3	Y	.009	.041	0	2.15
8	M3	Y	.041	.029	2.15	4.299
9	M3	Y	.029	.04	4.299	6.449
10	M3	Y	.04	.048	6.449	8.599
11	M3	Y	.048	.033	8.599	10.748
12	M3	Y	.033	.05	10.748	12.898
13	M3	Y	.05	.057	12.898	15.048
14	M3	Y	.057	.064	15.048	17.198
15	M3	Y	.064	.043	17.198	19.347
16	M3	Y	.043	.002	19.347	21.497
17	M4A	Y	.01	.051	0	2.104
18	M4A	Y	.051	.075	2.104	4.209
19	M4A	Y	.075	.078	4.209	6.313
20	M4A	Y	.078	.045	6.313	8.418
21	M4A	Y	.045	.023	8.418	10.522
22	M4A	Y	.023	.044	10.522	12.626
23	M4A	Y	.044	.065	12.626	14.731
24	M4A	Y	.065	.053	14.731	16.835
25	M4A	Y	.053	.012	16.835	18.939

Member Distributed Loads (BLC 13 : BLC 9 Transient Area Loads) (Continued)

	Member Label	Direction	Start Magnitude[k/ft,...	End Magnitude[k/ft,...	Start Location[ft,%]	End Location[ft,%]
26	M5	Y	.018	.115	0	2.083
27	M5	Y	.115	.156	2.083	4.167
28	M5	Y	.156	.156	4.167	6.25
29	M5	Y	.156	.156	6.25	8.333
30	M5	Y	.156	.156	8.333	10.416
31	M5	Y	.156	.155	10.416	12.499
32	M5	Y	.155	.108	12.499	14.583
33	M5	Y	.108	.029	14.583	16.666
34	18KCS2 (3)	Y	.056	.145	0	1.914
35	18KCS2 (3)	Y	.145	.175	1.914	3.828
36	18KCS2 (3)	Y	.175	.149	3.828	5.742
37	18KCS2 (3)	Y	.149	.123	5.742	7.656
38	18KCS2 (3)	Y	.123	.092	7.656	9.569
39	18KCS2 (2)	Y	.053	.149	0	2.083
40	18KCS2 (2)	Y	.149	.229	2.083	4.167
41	18KCS2 (2)	Y	.229	.235	4.167	6.25
42	18KCS2 (2)	Y	.235	.205	6.25	8.333
43	18KCS2 (2)	Y	.205	.175	8.333	10.416
44	18KCS2 (2)	Y	.175	.17	10.416	12.499
45	18KCS2 (2)	Y	.17	.132	12.499	14.583
46	18KCS2 (2)	Y	.132	.017	14.583	16.666
47	18KCS2 (1)	Y	.019	.143	0	2.083
48	18KCS2 (1)	Y	.143	.199	2.083	4.167
49	18KCS2 (1)	Y	.199	.199	4.167	6.25
50	18KCS2 (1)	Y	.199	.202	6.25	8.333
51	18KCS2 (1)	Y	.202	.214	8.333	10.416
52	18KCS2 (1)	Y	.214	.214	10.416	12.499
53	18KCS2 (1)	Y	.214	.142	12.499	14.583
54	18KCS2 (1)	Y	.142	.026	14.583	16.666
55	M30	Y	.03	.053	0	3
56	M30	Y	.053	.065	3	6
57	M30	Y	.065	.053	6	9
58	M30	Y	.053	.03	9	12
59	M31	Y	.056	.099	0	3
60	M31	Y	.099	.121	3	6
61	M31	Y	.121	.099	6	9
62	M31	Y	.099	.056	9	12
63	M32	Y	.026	.046	0	3
64	M32	Y	.046	.056	3	6
65	M32	Y	.056	.046	6	9
66	M32	Y	.046	.026	9	12
67	M33	Y	.029	.079	0	1.167
68	M33	Y	.079	.104	1.167	2.333
69	M33	Y	.104	.104	2.333	3.5
70	M33	Y	.104	.104	3.5	4.667
71	M33	Y	.104	.079	4.667	5.833
72	M33	Y	.079	.029	5.833	7
73	M34	Y	.029	.079	2.22e-16	1
74	M34	Y	.079	.104	1	2
75	M34	Y	.104	.104	2	3
76	M34	Y	.104	.104	3	4
77	M34	Y	.104	.079	4	5

Member Distributed Loads (BLC 13 : BLC 9 Transient Area Loads) (Continued)

	Member Label	Direction	Start Magnitude[k/ft,...	End Magnitude[k/ft,...	Start Location[ft,%]	End Location[ft,%]
78	M34	Y	.079	.029	5	6
79	M35	Y	-.004	.126	4.996e-15	1.167
80	M35	Y	.126	.191	1.167	2.333
81	M35	Y	.191	.191	2.333	3.5
82	M35	Y	.191	.191	3.5	4.667
83	M35	Y	.191	.126	4.667	5.833
84	M35	Y	.126	-.004	5.833	7
85	M36	Y	-.004	.126	6.661e-16	1
86	M36	Y	.126	.191	1	2
87	M36	Y	.191	.191	2	3
88	M36	Y	.191	.191	3	4
89	M36	Y	.191	.126	4	5
90	M36	Y	.126	-.004	5	6
91	M37	Y	.16	.16	1.167	5.833
92	M38	Y	.16	.16	1	5
93	M40	Y	.029	.079	1.11e-15	1.167
94	M40	Y	.079	.104	1.167	2.333
95	M40	Y	.104	.104	2.333	3.5
96	M40	Y	.104	.104	3.5	4.667
97	M40	Y	.104	.079	4.667	5.833
98	M40	Y	.079	.029	5.833	7
99	M41	Y	-.004	.126	2.22e-16	1
100	M41	Y	.126	.191	1	2
101	M41	Y	.191	.191	2	3
102	M41	Y	.191	.191	3	4
103	M41	Y	.191	.126	4	5
104	M41	Y	.126	-.004	5	6
105	M42	Y	-.004	.126	1.221e-15	1.167
106	M42	Y	.126	.191	1.167	2.333
107	M42	Y	.191	.191	2.333	3.5
108	M42	Y	.191	.191	3.5	4.667
109	M42	Y	.191	.126	4.667	5.833
110	M42	Y	.126	-.004	5.833	7
111	M42A	Y	.029	.079	0	1
112	M42A	Y	.079	.104	1	2
113	M42A	Y	.104	.104	2	3
114	M42A	Y	.104	.104	3	4
115	M42A	Y	.104	.079	4	5
116	M42A	Y	.079	.029	5	6

Member Distributed Loads (BLC 14 : BLC 11 Transient Area Loads)

	Member Label	Direction	Start Magnitude[k/ft,...	End Magnitude[k/ft,...	Start Location[ft,%]	End Location[ft,%]
1	M35	Y	.2	.2	2	5
2	M37	Y	.4	.4	2	5
3	M42	Y	.2	.2	2	5
4	M36	Y	.2	.2	2	5
5	M38	Y	.4	.4	2	5
6	M41	Y	.2	.2	1	4

Member Distributed Loads (BLC 15 : BLC 3 Transient Area Loads)

	Member Label	Direction	Start Magnitude[k/ft,...	End Magnitude[k/ft,...	Start Location[ft,%]	End Location[ft,%]

Member Distributed Loads (BLC 15 : BLC 3 Transient Area Loads) (Continued)

	Member Label	Direction	Start Magnitude[k/ft,...	End Magnitude[k/ft,...	Start Location[ft,%]	End Location[ft,%]
1	M3	X	.003	.091	0	2.15
2	M3	X	.091	.258	2.15	4.299
3	M3	X	.258	.318	4.299	6.449
4	M3	X	.318	.268	6.449	8.599
5	M3	X	.268	.29	8.599	10.748
6	M3	X	.29	.325	10.748	12.898
7	M3	X	.325	.3	12.898	15.048
8	M3	X	.3	.22	15.048	17.198
9	M3	X	.22	.103	17.198	19.347
10	M3	X	.103	.003	19.347	21.497
11	M8A	X	.346	.301	0	2
12	M8A	X	.301	.249	2	4
13	M8A	X	.249	.19	4	6
14	M8A	X	.19	.13	6	8
15	M8A	X	.13	.071	8	10
16	M8A	X	.071	.011	10	12
17	M9	X	.323	.323	2.109e-15	1
18	M9	X	.661	.617	1	2
19	M9	X	.617	.558	2	3
20	M9	X	.558	.5	3	4
21	M9	X	.5	.441	4	5
22	M9	X	.441	.383	5	6
23	M9	X	.383	.324	6	7
24	M9	X	.324	.265	7	8
25	M9	X	.265	.207	8	9
26	M9	X	.207	.148	9	10
27	M9	X	.148	.089	10	11
28	M9	X	.089	.03	11	12
29	M14	X	1.052	.38	0	.6
30	M14	X	.38	.027	.6	1.2
31	M14	X	.027	.011	1.2	1.8
32	M14	X	.011	.012	1.8	2.4
33	M15	X	2.162	.707	0	.6
34	M15	X	.707	-.003	.6	1.2
35	M15	X	-.003	.041	1.2	1.8
36	M15	X	.041	-.003	1.8	2.4
37	M15	X	-.003	-.073	2.4	3
38	M50	X	.016	.076	0	2.075
39	M50	X	.076	.131	2.075	4.151
40	M50	X	.131	.135	4.151	6.226
41	M50	X	.135	.11	6.226	8.302
42	M50	X	.11	.109	8.302	10.377
43	M50	X	.109	.125	10.377	12.453
44	M50	X	.125	.147	12.453	14.528
45	M50	X	.147	.128	14.528	16.604
46	M50	X	.128	.068	16.604	18.679
47	M50	X	.068	.021	18.679	20.755
48	M50	X	.021	.002	20.755	22.83
49	M51	X	.043	.102	0	2
50	M51	X	.102	.166	2	4
51	M51	X	.166	.202	4	6
52	M51	X	.202	.129	6	8

Member Distributed Loads (BLC 15 : BLC 3 Transient Area Loads) (Continued)

	Member Label	Direction	Start Magnitude[k/ft,...	End Magnitude[k/ft,...	Start Location[ft,%]	End Location[ft,%]
53	M51	X	.129	.008	8	10
54	M52	X	.03	.08	0	1.8
55	M52	X	.08	.09	1.8	3.6
56	M52	X	.09	.1	3.6	5.4
57	M52	X	.1	.091	5.4	7.2
58	M52	X	.091	.023	7.2	9
59	M60	X	.029	.029	22.307	22.83
60	M8A	X	.366	.337	1.332e-15	1
61	M8A	X	.337	.308	1	2
62	M8A	X	.308	.278	2	3
63	M8A	X	.278	.249	3	4
64	M8A	X	.249	.22	4	5
65	M8A	X	.22	.191	5	6
66	M8A	X	.191	.161	6	7
67	M8A	X	.161	.132	7	8
68	M8A	X	.132	.103	8	9
69	M8A	X	.103	.073	9	10
70	M8A	X	.073	.044	10	11
71	M8A	X	.044	.015	11	12
72	M50	X	.019	.019	20.547	22.83
73	M59	X	.467	.467	0	2.15
74	M59	X	.467	.569	2.15	4.299
75	M59	X	.569	.583	4.299	6.449
76	M59	X	.583	.474	6.449	8.599
77	M59	X	.474	.426	8.599	10.748
78	M59	X	.426	.37	10.748	12.898
79	M59	X	.37	.353	12.898	15.048
80	M59	X	.353	.264	15.048	17.198
81	M59	X	.264	.096	17.198	19.347
82	M59	X	.096	.001	19.347	21.497
83	M60	X	.15	.15	0	2.055
84	M60	X	.15	.15	2.055	4.109
85	M60	X	.15	.15	4.109	6.164
86	M60	X	.15	.15	6.164	8.219
87	M60	X	.15	.15	8.219	10.274
88	M60	X	.15	.15	10.274	12.328
89	M60	X	.15	.157	12.328	14.383
90	M60	X	.157	.144	14.383	16.438
91	M60	X	.144	.089	16.438	18.492
92	M60	X	.089	.02	18.492	20.547
93	M9	X	.367	.338	4.996e-15	1
94	M52	X	.016	.046	8.327e-16	1
95	M52	X	.046	.062	1	2
96	M52	X	.062	.077	2	3
97	M52	X	.077	.108	3	4
98	M52	X	.108	.123	4	5
99	M52	X	.123	.109	5	6
100	M52	X	.109	.078	6	7
101	M52	X	.078	.048	7	8
102	M52	X	.048	.017	8	9
103	M57	X	.0003766	.097	0	2.15
104	M57	X	.097	.257	2.15	4.299

Member Distributed Loads (BLC 15 : BLC 3 Transient Area Loads) (Continued)

	Member Label	Direction	Start Magnitude[k/ft,..	End Magnitude[k/ft,...	Start Location[ft,%]	End Location[ft,%]
105	M57	X	.257	.382	4.299	6.449
106	M57	X	.382	.409	6.449	8.599
107	M57	X	.409	.43	8.599	10.748
108	M57	X	.43	.466	10.748	12.898
109	M57	X	.466	.494	12.898	15.048
110	M57	X	.494	.541	15.048	17.198
111	M57	X	.541	.59	17.198	19.347
112	M57	X	.59	.63	19.347	21.497
113	M58	X	.016	.076	0	2.075
114	M58	X	.076	.128	2.075	4.151
115	M58	X	.128	.15	4.151	6.226
116	M58	X	.15	.15	6.226	8.302
117	M58	X	.15	.15	8.302	10.377
118	M58	X	.15	.15	10.377	12.453
119	M58	X	.15	.151	12.453	14.528
120	M58	X	.151	.152	14.528	16.604
121	M58	X	.152	.153	16.604	18.679
122	M58	X	.153	.154	18.679	20.755
123	M58	X	.154	.155	20.755	22.83

Member Area Loads (BLC 2 : DL)

	Joint A	Joint B	Joint C	Joint D	Direction	Distribution	Magnitude[ksf]
1	N10	N11	N5	N6	Y	Two Way	.1
2	N35	N39	N38	N34	Y	Two Way	.015

Member Area Loads (BLC 3 : W-NS)

	Joint A	Joint B	Joint C	Joint D	Direction	Distribution	Magnitude[ksf]
1	N71	N14	N13	N70	X	Two Way	.03
2	N13	N85	N83	N70	X	Two Way	.03
3	N71	N14	N84A	N82	X	Two Way	.03

Member Area Loads (BLC 9 : LL)

	Joint A	Joint B	Joint C	Joint D	Direction	Distribution	Magnitude[ksf]
1	N10	N6	N5	N11	Y	Two Way	.04
2	N39	N35	N34	N38	Y	Two Way	.06

Member Area Loads (BLC 11 : EquipL)

	Joint A	Joint B	Joint C	Joint D	Direction	Distribution	Magnitude[ksf]
1	N61	N51	N62	N63	Y	Two Way	.15
2	N40	N64	N65	N50	Y	Two Way	.15

Load Combinations

	Description	S...	P...	S...	B...	Fa...	B...	Fa...	B...	Fa...	B...	Fa...	B...	Fa...	B...	Fa...	B...	Fa...	B...	Fa...	B...	Fa...	B...	Fa...
1	1.4DL	Yes	Y		1	1.4	2	-1.4	7	-1.4							9	-1.4			11	-1.4		
2	1.2DL+1.0Wo 0deg	Yes	Y		1	1.2	2	-1.2	7	-1.2	3	1	4				9	-1.2			11	-1.2		
3	1.2DL+1.0Wo 30deg	Yes	Y		1	1.2	2	-1.2	7	-1.2	3	.866	4	.5			9	-1.2			11	-1.2		
4	1.2DL+1.0Wo 60deg	Yes	Y		1	1.2	2	-1.2	7	-1.2	3	.5	4	.866			9	-1.2			11	-1.2		

Load Combinations (Continued)

	Description	S...	P...	S...	B...	Fa...	B...	Fa...	B...	Fa...	B...	Fa...	B...	Fa...	B...	Fa...	B...	Fa...	B...	Fa...	B...	Fa...	B...	Fa...
5	1.2DL+1.0Wo 90deg	Yes	Y		1	1.2	2	-1.2	7	-1.2	3		4	1			9	-1.2			11	-1.2		
6	1.2DL+1.0Wo 120deg	Yes	Y		1	1.2	2	-1.2	7	-1.2	3	-.5	4	.866			9	-1.2			11	-1.2		
7	1.2DL+1.0Wo 150deg	Yes	Y		1	1.2	2	-1.2	7	-1.2	3	-.8...	4	.5			9	-1.2			11	-1.2		
8	1.2DL+1.0Wo 180deg	Yes	Y		1	1.2	2	-1.2	7	-1.2	3	-1	4				9	-1.2			11	-1.2		
9	1.2DL+1.0Wo 210deg	Yes	Y		1	1.2	2	-1.2	7	-1.2	3	-.8...	4	-.5			9	-1.2			11	-1.2		
10	1.2DL+1.0Wo 240deg	Yes	Y		1	1.2	2	-1.2	7	-1.2	3	-.5	4	-.8...			9	-1.2			11	-1.2		
11	1.2DL+1.0Wo 270deg	Yes	Y		1	1.2	2	-1.2	7	-1.2	3		4	-1			9	-1.2			11	-1.2		
12	1.2DL+1.0Wo 300deg	Yes	Y		1	1.2	2	-1.2	7	-1.2	3	.5	4	-.8...			9	-1.2			11	-1.2		
13	1.2DL+1.0Wo 330deg	Yes	Y		1	1.2	2	-1.2	7	-1.2	3	.866	4	-.5			9	-1.2			11	-1.2		
14	1.2DL+1.0Wi+1.0DLi 0deg	Yes	Y		1	1.2	2	-1.2	7	-1.2	6	1	5		8	-1	9	-1.2	10	-1	11	-1.2		
15	1.2DL+1.0Wi+1.0DLi 30deg	Yes	Y		1	1.2	2	-1.2	7	-1.2	6	.866	5	.5	8	-1	9	-1.2	10	-1	11	-1.2		
16	1.2DL+1.0Wi+1.0DLi 60deg	Yes	Y		1	1.2	2	-1.2	7	-1.2	6	.5	5	.866	8	-1	9	-1.2	10	-1	11	-1.2		
17	1.2DL+1.0Wi+1.0DLi 90deg	Yes	Y		1	1.2	2	-1.2	7	-1.2	6		5	1	8	-1	9	-1.2	10	-1	11	-1.2		
18	1.2DL+1.0Wi+1.0DLi 120deg	Yes	Y		1	1.2	2	-1.2	7	-1.2	6	-.5	5	.866	8	-1	9	-1.2	10	-1	11	-1.2		
19	1.2DL+1.0Wi+1.0DLi 150deg	Yes	Y		1	1.2	2	-1.2	7	-1.2	6	-.8...	5	.5	8	-1	9	-1.2	10	-1	11	-1.2		
20	1.2DL+1.0Wi+1.0DLi 180deg	Yes	Y		1	1.2	2	-1.2	7	-1.2	6	-1	5		8	-1	9	-1.2	10	-1	11	-1.2		
21	1.2DL+1.0Wi+1.0DLi 210deg	Yes	Y		1	1.2	2	-1.2	7	-1.2	6	-.8...	5	-.5	8	-1	9	-1.2	10	-1	11	-1.2		
22	1.2DL+1.0Wi+1.0DLi 240deg	Yes	Y		1	1.2	2	-1.2	7	-1.2	6	-.5	5	-.8...	8	-1	9	-1.2	10	-1	11	-1.2		
23	1.2DL+1.0Wi+1.0DLi 270deg	Yes	Y		1	1.2	2	-1.2	7	-1.2	6		5	-1	8	-1	9	-1.2	10	-1	11	-1.2		
24	1.2DL+1.0Wi+1.0DLi 300deg	Yes	Y		1	1.2	2	-1.2	7	-1.2	6	.5	5	-.8...	8	-1	9	-1.2	10	-1	11	-1.2		
25	1.2DL+1.0Wi+1.0DLi 330deg	Yes	Y		1	1.2	2	-1.2	7	-1.2	6	.866	5	-.5	8	-1	9	-1.2	10	-1	11	-1.2		

Envelope Joint Reactions

	Joint		X [k]	LC	Y [k]	LC	Z [k]	LC	MX [k-ft]	LC	MY [k-ft]	LC	MZ [k-ft]	LC
1	N13	max	4.031	8	38.188	1	-.455	8	-1.76	8	.058	8	10.077	2
2		min	-3.831	2	32.185	2	-.535	1	-2.107	1	-.059	2	-12.283	8
3	N14	max	4.116	8	29.237	1	.568	1	2.318	1	.035	2	4.954	2
4		min	-2.88	2	24.309	2	.448	2	1.769	2	-.033	8	-10.737	8
5	N15	max	8.869	8	60.739	1	-5.025	2	-.105	2	.238	2	62.517	2
6		min	-9.267	2	50.62	2	-5.894	1	-.206	8	-2.013	8	-100.586	8
7	N16	max	-2.554	8	60.828	1	2.876	1	-.102	2	4.464	8	49.627	2
8		min	-7.098	2	49.522	8	2.329	8	-.203	8	-.709	2	-32.732	8
9	N79A	max	11.179	8	1.081	1	3.884	2	1.671	8	17.116	8	.977	8
10		min	-7.914	2	.878	8	-9.522	8	1.095	2	-17.007	2	.644	2
11	N82	max	10.138	8	3.34	1	5.38	2	-10.383	8	6.203	8	-5.994	8
12		min	-4.883	2	2.84	8	-14.45	8	-12.276	1	-6.031	2	-7.086	1
13	N82A	max	5.557	8	.531	1	8.589	8	-4.436	2	20.605	2	0	2
14		min	-5.536	2	.409	8	-1.686	2	-5.538	1	-20.813	8	-.004	8
15	N83	max	1.667	8	3.117	1	18.06	8	12.73	1	5.72	2	.002	8
16		min	-1.594	2	2.671	2	-5.142	2	10.9	2	-6.345	8	0	2
17	N84A	max	0	25	0	25	0	25	0	25	0	25	0	25
18		min	0	1	0	1	0	1	0	1	0	1	0	1
19	N85	max	0	25	0	25	0	25	0	25	0	25	0	25
20		min	0	1	0	1	0	1	0	1	0	1	0	1
21	N47	max	NC		NC		NC		LOCKED		NC		NC	
22		min	NC		NC		NC		LOCKED		NC		NC	
23	N45	max	NC		NC		NC		LOCKED		NC		NC	
24		min	NC		NC		NC		LOCKED		NC		NC	
25	Totals:	max	43.004	8	197.06	1	0	25						
26		min	-43.004	2	168.909	8	0	1						

Envelope AISC 14th(360-10): LRFD Steel Code Checks

	Member	Shape	Code Check	Loc[ft]	LC	Shear ...	Loc[ft]	Dir	LC	phi*Pnc ...	phi*Pnt ...	phi*Mn ...	phi*Mn ...	Cb	Eqn
1	M3	W16X45	.493	21.4...	8	.155	20.8...	y	1	111.351	598.5	54.375	178.667	1...	H1-1b
2	M5	W16X26	.309	16.6...	2	.066	16.6...	y	1	54.167	345.6	20.55	114.666	2...	H1-1b
3	M16	PIPE 4.0	.269	3	2	.053	0		2	90.594	93.24	10.631	10.631	1...	H1-1b
4	M4A	W18X35	.255	0	2	.042	1.381	y	1	66.917	463.5	30.225	154.217	2...	H1-1b
5	M12	W12X26	.251	9.201	1	.093	16.6...	y	1	309.384	344.25	30.637	139.5	1...	H1-1b
6	M13	W12X26	.211	9.201	1	.081	16.6...	y	1	309.384	344.25	30.637	139.5	1...	H1-1b
7	M8A	W10X33	.187	0	8	.048	0	y	8	292.242	436.95	52.5	145.5	3...	H1-1b
8	M9	W10X33	.172	12	1	.049	0	y	8	292.242	436.95	52.5	145.5	2.2	H1-1b
9	M17	PIPE 4.0	.170	3	2	.023	0		2	90.594	93.24	10.631	10.631	1...	H1-1b
10	M15	PIPE 4.0	.135	3	8	.055	0		8	90.594	93.24	10.631	10.631	2...	H1-1b
11	M14	PIPE 4.0	.131	3	1	.083	0		2	90.594	93.24	10.631	10.631	1...	H1-1b
12	M45	W12X26	.070	5	1	.022	0	y	1	213.265	344.25	30.637	139.5	1...	H1-1b
13	M43	W12X26	.068	5	1	.018	0	y	1	213.265	344.25	30.637	139.5	1...	H1-1b
14	M44	W12X26	.068	5	1	.016	0	y	1	213.265	344.25	30.637	139.5	1...	H1-1b

Envelope AISI S100-12: LRFD Cold Formed Steel Code Checks

	Mem...	Shape	Code Check	Lo...	LC	Sh...	Lo...	...	...	phi*...	phi*...	phi*...	phi*...	Cb	C...	C...	Eqn
1	M42A	PV Plat Cross C8....	.611	1	1	.063	0	z	1	50.7...	72.7...	1.825	14.0...	1	.6	1	C5....
2	M34	PV Plat Cross C8....	.591	5	1	.064	5	z	1	50.7...	72.7...	1.825	14.0...	1	.6	1	C5....
3	M40	PV Plat Cross C8....	.412	5.0...	1	.058	5....	y	1	47.0...	72.7...	1.825	13.9...	1	.6	1	C5....
4	M36	PV Plat Cross C8....	.408	5	1	.052	5	y	1	50.7...	72.7...	1.825	14.0...	1....	.6	1	C5....
5	M33	PV Plat Cross C8....	.401	1.9...	1	.061	1....	y	1	47.0...	72.7...	1.825	13.9...	1	.6	1	C5....
6	M41	PV Plat Cross C8....	.386	1	1	.054	1	y	1	50.7...	72.7...	1.825	13.8...	1....	.6	1	C5....
7	M31	PV Plat Main C8.2...	.368	8.6...	1	.062	12	y	1	53.6	91.3...	2.013	16.6...	1....	.666	.85	C5....
8	M30	PV Plat Main C8.2...	.346	6	1	.036	12	y	1	53.6	91.3...	2.013	16.6...	1....	.6	.85	C5....
9	M32	PV Plat Main C8.2...	.343	6	1	.036	0	y	1	53.6	91.3...	2.013	16.6...	1....	.6	.85	C5....
10	M37	PV Plat Cross C8....	.224	4.3...	1	.075	2....	y	1	46.88	72.7...	1.825	14.0...	1....	.6	1	C5....
11	M35	PV Plat Cross C8....	.217	1.9...	1	.052	2....	y	1	46.9...	72.7...	1.825	14.0...	1.52	.6	1	C5....
12	M42	PV Plat Cross C8....	.198	5.0...	1	.056	4....	y	1	46.9...	72.7...	1.825	13.5...	3....	.6	1	C5....
13	M38	PV Plat Cross C8....	.196	2.6...	1	.080	5	y	1	50.6...	72.7...	1.825	14.0...	1....	.6	1	C5....

THE INFORMATION CONTAINED IN THIS SET OF CONSTRUCTION DOCUMENTS IS PROPRIETARY BY NATURE. ANY USE OR DISCLOSURE OTHER THAN THAT WHICH RELATES TO CARRIER SERVICES IS STRICTLY PROHIBITED.

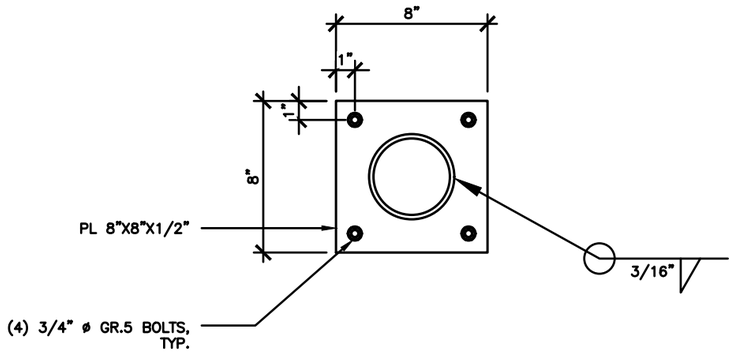

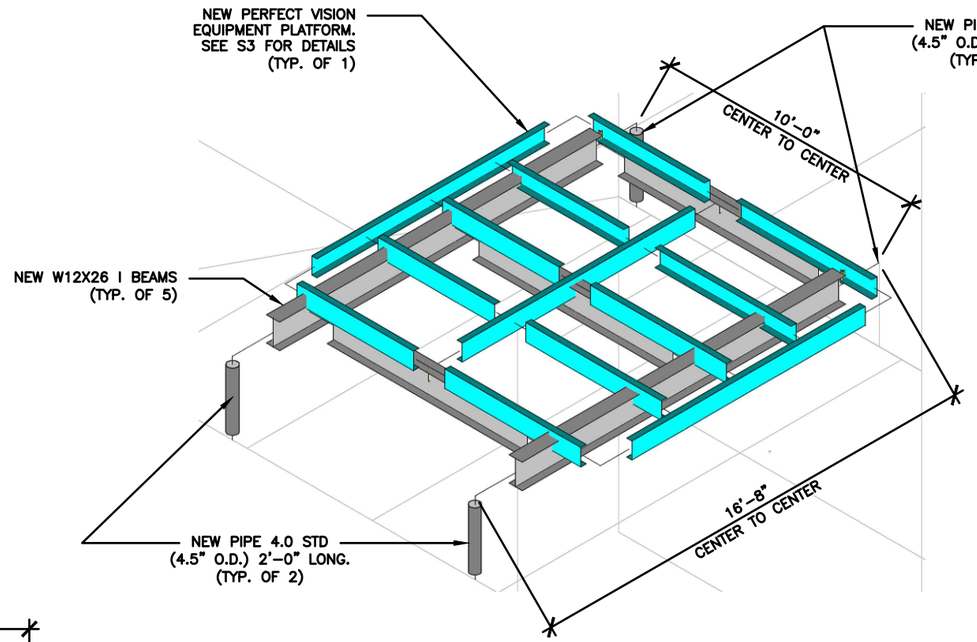

ISOMETRIC VIEW

STRUCTURAL NOTES:

1. STRUCTURAL CALCULATIONS PREPARED BY JOHN M BANKS ARCHITECT. CONTRACTOR TO VERIFY WITH PROJECT MANAGER TO OBTAIN A COPY.
2. CONTRACTOR TO REFER TO STRUCTURAL CALCULATIONS FOR ADDITIONAL LOADS. NO ERECTION OR MODIFICATION OF BUILDING SHALL BE MADE WITHOUT APPROVAL OF STRUCTURAL ENGINEER.

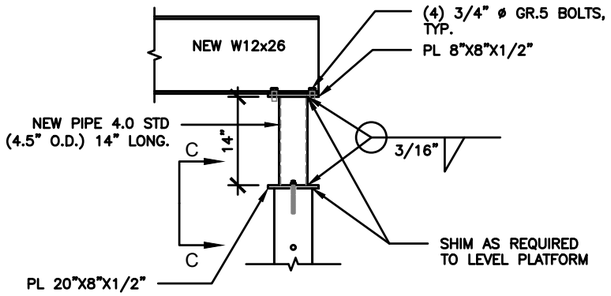

B-B DETAIL

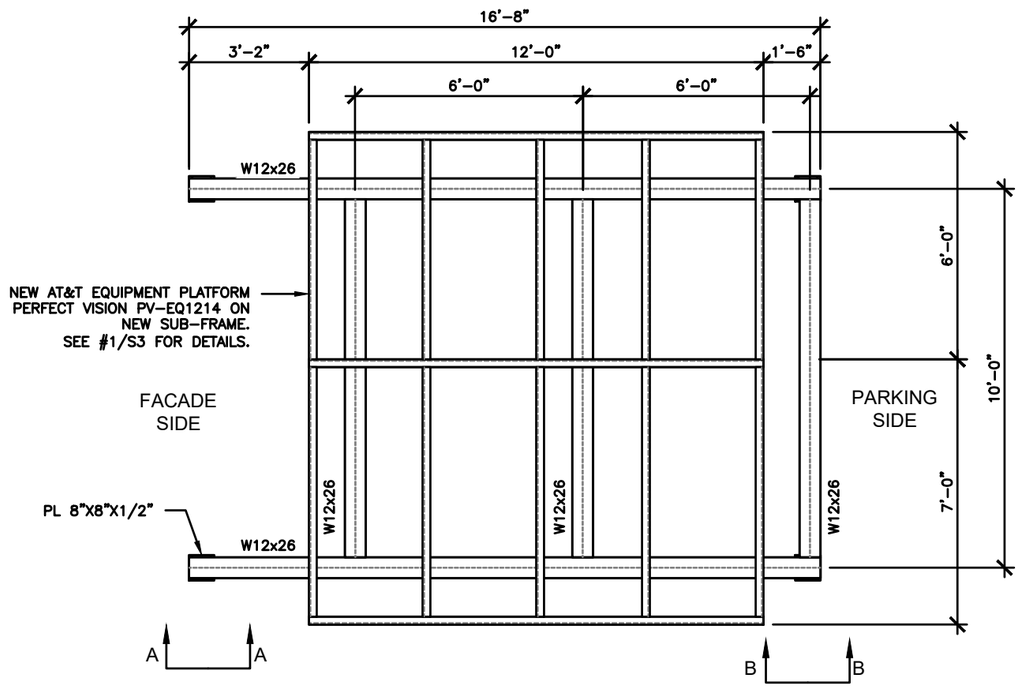

PLATFORM FRAME & SUB-FRAME PLAN

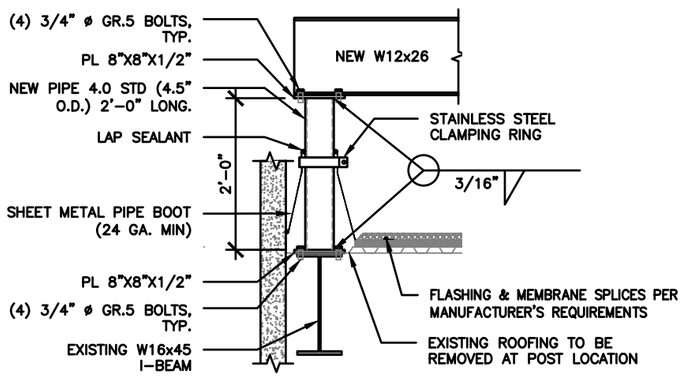

A-A DETAIL

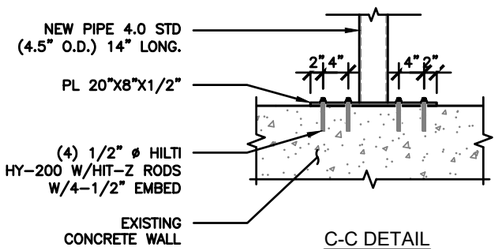

C-C DETAIL

PLATFORM STRUCTURAL DETAILS

SCALE N.T.S. | 1

AT&T
930 NATIONAL PARKWAY
SCHAUMBURG, IL 60173

NEXIUS
DANIEL KALINA
SITE ACQUISITION SPECIALIST
PHONE: 630-946-7741
DANIEL.KALINA@NEXIUS.COM

WESTCHESTER SERVICES LLC
604 FOX GLEN
BARRINGTON, IL 60010
PHONE: 847-277-0070
AE@Westchesterservices.com

JOHN M. BANKS ARCHITECT
604 FOX GLEN
BARRINGTON, IL 60010
TELEPHONE: 847-277-0070
FAX : 847-277-0080
jbanks@westchesterservices.com

NSB
15515920/IL4218
ILL04218
525 VILLAGE CENTER DRIVE
BURR RIDGE, IL 60527

REVISIONS			
REV.	DATE	DESCRIPTION	INITIALS
0	07/05/22	PERMIT/CONSTRUCTION	CG
A	06/09/22	PRELIMINARY CD	DS

NOT FOR CONSTRUCTION UNLESS LABELED AS CONSTRUCTION SET

JOSEPH A. MEYER 081-007241 LICENSED STRUCTURAL ENGINEER ILLINOIS BARRINGTON, IL

"I HEREBY CERTIFY THAT THESE PLANS WERE PREPARED BY ME OR UNDER MY DIRECT SUPERVISION AND THAT I AM A DULY REGISTERED ENGINEER UNDER THE LAWS OF THE STATE OF ILLINOIS"

SHEET TITLE: PLATFORM STRUCTURAL DETAILS

SHEET NUMBER: S1

THE INFORMATION CONTAINED IN THIS SET OF CONSTRUCTION DOCUMENTS IS PROPRIETARY BY NATURE. ANY USE OR DISCLOSURE OTHER THAN THAT WHICH RELATES TO CARRIER SERVICES IS STRICTLY PROHIBITED.

NOT USED

SCALE N.T.S. 4

NOT USED

SCALE N.T.S. 2

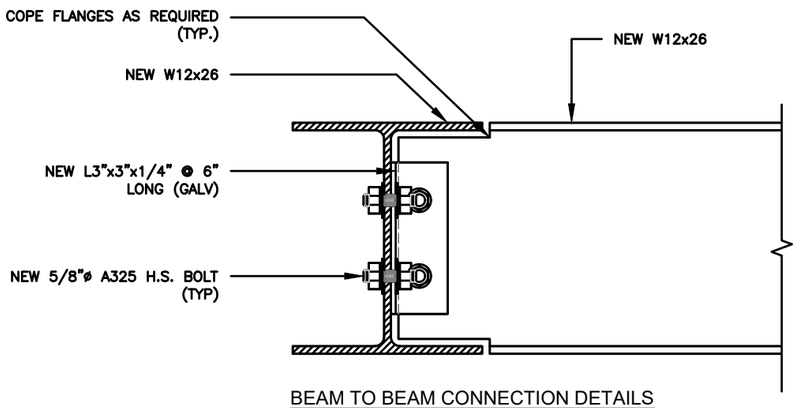

BEAM TO BEAM CONNECTION DETAILS

BEAM TO BEAM CONNECTION

SCALE N.T.S. 3

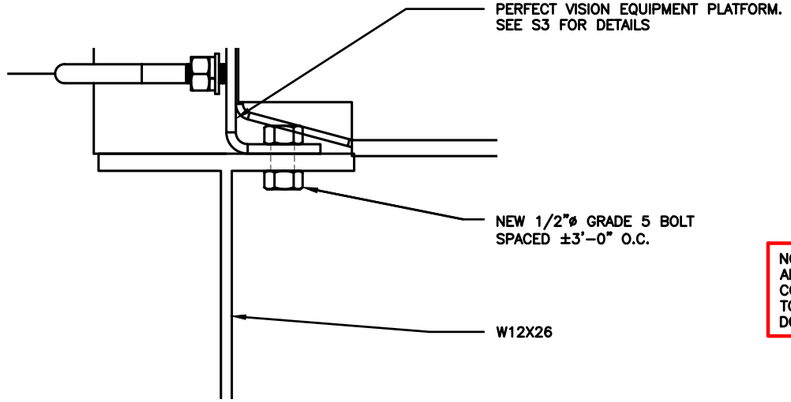

STRUCTURAL NOTES:

1. STRUCTURAL CALCULATIONS PREPARED BY JOHN M BANKS ARCHITECT. CONTRACTOR TO VERIFY WITH PROJECT MANAGER TO OBTAIN A COPY.
2. CONTRACTOR TO REFER TO STRUCTURAL CALCULATIONS FOR ADDITIONAL LOADS. NO ERECTION OR MODIFICATION OF BUILDING SHALL BE MADE WITHOUT APPROVAL OF STRUCTURAL ENGINEER.

NOTE:
ANY DRILLING REQUIRED FOR THIS CONNECTION SHALL BE COMPLETED PRIOR TO CABINET INSTALLATION.
DO NOT DRILL MEMBERS UNDER LOAD.

PLATFORM TO BEAM CONNECTION DETAIL

SCALE N.T.S. 1

AT&T
930 NATIONAL PARKWAY
SCHAUMBURG, IL 60173

NEXIUS
DANIEL KALINA
SITE ACQUISITION SPECIALIST
PHONE: 630-946-7741
DANIEL.KALINA@NEXIUS.COM

WESTCHESTER SERVICES LLC
604 FOX GLEN
BARRINGTON, IL 60010
PHONE: 847-277-0070
AE@Westchesterservices.com

JOHN M. BANKS ARCHITECT
604 FOX GLEN
BARRINGTON, IL 60010
TELEPHONE: 847-277-0070
FAX : 847-277-0080
jbanks@westchesterservices.com

NSB
15515920/IL4218
ILL04218
525 VILLAGE CENTER DRIVE
BURR RIDGE, IL 60527

REVISIONS

REV.	DATE	DESCRIPTION	INITIALS
0	07/05/22	PERMIT/CONSTRUCTION	CG
A	06/09/22	PRELIMINARY CD	DS

NOT FOR CONSTRUCTION UNLESS LABELED AS CONSTRUCTION SET

JOSEPH A. MEYER 081-003241 LICENSED STRUCTURAL ENGINEER ILLINOIS

"I HEREBY CERTIFY THAT THESE PLANS WERE PREPARED BY ME OR UNDER MY DIRECT SUPERVISION AND THAT I AM A DULY REGISTERED ENGINEER UNDER THE LAWS OF THE STATE OF ILLINOIS"

SHEET TITLE
STRUCTURAL DETAILS

SHEET NUMBER
S2

PV-EQ1214-B

6-POST EQUIPMENT PLATFORM BASE KIT

WEIGHT: 2000 LBS

POST, STEP, HANDRAIL, AND OTHER ACCESSORIES SOLD SEPARATELY

SEE DRAWING WCEQ-ENG-01 FOR ADDITIONAL DETAILS

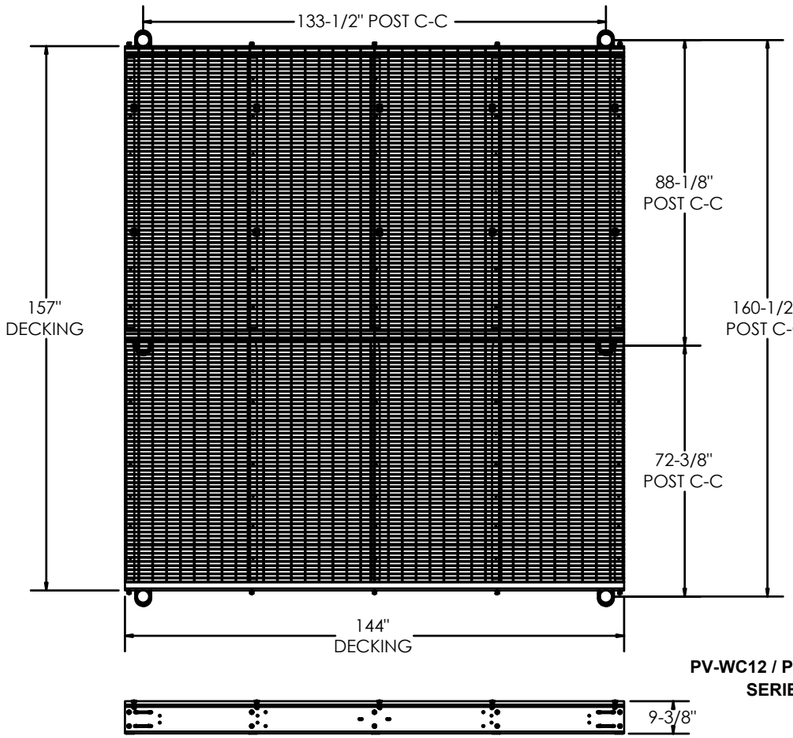

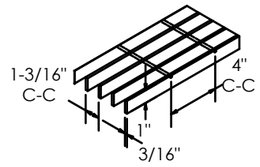

BAR GRATING
Style: 1"x3/16" 19W4
W: 735lb/ft^2
Material: Steel HDG

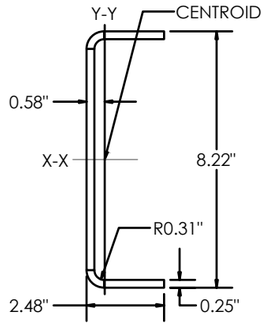

MAIN MEMBER (M)
W: 10.4 lb/ft
A: 3.08 in^2
Ix: 27.71 in^4
Iy: 1.56 in^4
Material: A36 HDG

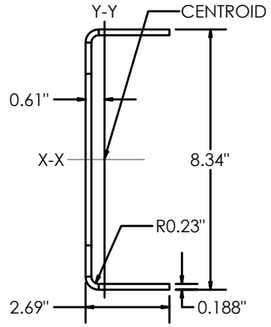

CROSS MEMBER (C)
W: 8.35 lb/ft
A: 2.45 in^2
Ix: 23.76 in^4
Iy: 1.53 in^4
Material: A36 HDG

PV-WC12 / PV-EQ12 SERIES:

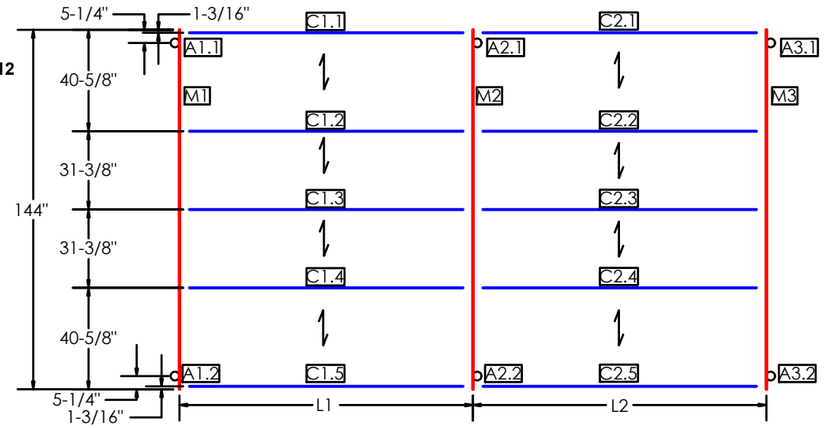

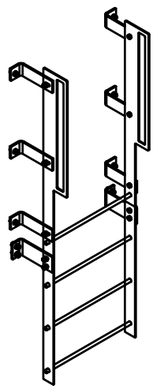

PV-EQ-LADDER
WEIGHT: 95 LBS

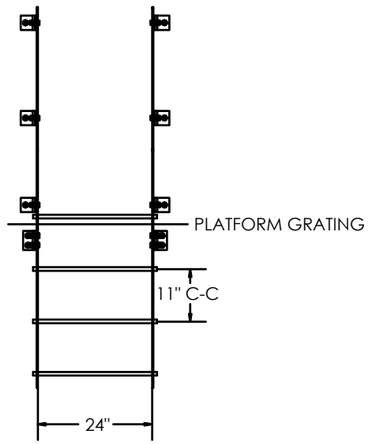

SHEET: 1 OF 1	THIRD ANGLE PROJECTION	CATEGORY: 07_Platforms & Canopies	4			
		SERIES: 01_Platforms	3			
12/6/2021	SCALE: 1:36	TYPE: PV-EQ	2			
DIMENSIONS ARE IN INCHES TOLERANCES U.N.O. HOLES: +1/16", -1/32" ANGULAR: PROFILE ±1/4, BEND2 ± • ALL OTHERS: ±1/16"		BY: DJN	1			EQUIPMENT PLATFORM
		CHECKED: SJS	0	INITIAL RELEASE	12/2/21	DOCUMENT NUMBER: EQ1214-ENG-R0 — REV: 0
		STATUS: APPROVED	REV	DESCRIPTION	DATE	

EQUIPMENT PLATFORM DETAILS (PV-EQ1018-B WITH PV-EQ1018-HR AND PV-EQ-POST-7)

SCALE: N.T.S. — 1

AT&T
930 NATIONAL PARKWAY
SCHAUMBURG, IL 60173

NEXIUS
DANIEL KALINA
SITE ACQUISITION SPECIALIST
PHONE: 630-946-7741
DANIEL.KALINA@NEXIUS.COM

WESTCHESTER SERVICES LLC
604 FOX GLEN
BARRINGTON, IL 60010
PHONE: 847-277-0070
AE@Westchesterservices.com

JOHN M. BANKS ARCHITECT
604 FOX GLEN
BARRINGTON, IL 60010
TELEPHONE: 847-277-0070
FAX : 847-277-0080
jbanks@westchesterservices.com

NSB
15515920/IL4218
ILL04218
525 VILLAGE CENTER DRIVE
BURR RIDGE, IL 60527

REVISIONS

REV.	DATE	DESCRIPTION	INITIALS
0	07/05/22	PERMIT/CONSTRUCTION	CG
A	06/09/22	PRELIMINARY CD	DS

NOT FOR CONSTRUCTION UNLESS LABELED AS CONSTRUCTION SET

JOSEPH A. MEYER 081-00[illegible]41 LICENSED STRUCTURAL ENGINEER ILLINOIS

"I HEREBY CERTIFY THAT THESE PLANS WERE PREPARED BY ME OR UNDER MY DIRECT SUPERVISION AND THAT I AM A DULY REGISTERED ENGINEER UNDER THE LAWS OF THE STATE OF ILLINOIS"

SHEET TITLE: EQUIPMENT PLATFORM DETAILS

SHEET NUMBER: S3

THE INFORMATION CONTAINED IN THIS SET OF CONSTRUCTION DOCUMENTS IS PROPRIETARY BY NATURE. ANY USE OR DISCLOSURE OTHER THAN THAT WHICH RELATES TO CARRIER SERVICES IS STRICTLY PROHIBITED.

JMB John M. Banks Architect

604 FOX GLEN, BARRINGTON, IL 60010
847/277-0070 . FAX: 847/277-0080
jbanks@westchesterservices.com

Date: **June 29, 2022**

Kristen Weiss
Nexius
2595 N Dallas Parkway
Frisco, TX 75034

Subject: Mount Analysis Report

AT&T Mobility Co-Locate
Site Number: IL4218
Site Name: IL4218
FA#: 15515920
Pace#: MRCHI058280
PTN#: 3301A0YCJ5

Engineering Firm Designation: **John M. Banks Architect**

Site Data: **565 Village Center Dr., Burr Ridge, IL 60527**
N41.752630, W87.912430
Cook County – 50ft Rooftop

Kristen Weiss,

John M Banks Architect is pleased to submit this **"Mount Analysis Report"** to determine the structural integrity of the above mentioned antenna mounting system. The purpose of the analysis is to determine acceptability of the tower antenna mount stress level. Based on our analysis we have determined the tower antenna mount stress levels to be:

Existing and Proposed Equipment **Sufficient Capacity**
Note: See Table 2-1 for the existing and proposed loading.

Member Type	Result	Pass/Fail
Overall	78.4%	Pass

The analysis has been performed in accordance with the following criteria:

Building Code: International Building Code 2018
TIA Standard: TIA-222-H
Mount Make: N/A
Mount Model: N/A
CONMAT Item#: N/A

I certify that this report was prepared by me or under my direct supervision and that I am a licensed Structural Engineer under the laws of the State of Illinois.



Joseph Meyer, SE
Structural Engineer

TABLE OF CONTENTS

1) INTRODUCTION

2) ANALYSIS CRITERIA
Table 2-1 – Proposed Final Antenna Configuration

3) ANALYSIS PROCEDURE
Table 3-1 – Documents Provided
Table 3-2 – Companion Document
3.1 Analysis Method

4) ANALYSIS RESULTS
Table 4-1 – Critical Section Capacity (Summary)
4.1 Recommendations

5) ASSUMPTIONS

6) APPENDIX A
Calculations

1) INTRODUCTION

This is a 50ft tall rooftop located in Cook County, IL. The proposed antennas will be mounted on proposed antenna frames mounted entirely inside a proposed stealth shroud.

2) ANALYSIS CRITERIA

The structural analysis was performed for this structure in accordance with the requirements of TIA-222-H Structural Standards for Antenna Supporting Structures and Antennas using an ultimate gust wind speed of 107 mph with no ice, 40 mph with 1.5 inch ice thickness, risk category II, exposure category B with topographic category 1 and crest height of 0 feet.

Table 2-1 – Proposed Final Antenna Configuration
(New antennas in **bold**)

Center Line Elevation (ft)	Sector (Az.)	Pos.	Antenna	Radio(s)	Note
55	Alpha (0°)	1	**(1) NNH4-65B-R6H4**	**(1) RRUS4449 B5/B12** **(1) RRUS8843 B2/B66A**	
		2	-Empty-		
		3	**(1) Air 6449 B77D** **(1) Air 6419 B77G**		1
		4	**(1) NNH4-65B-R6H4**	**(1) RRUS4478 B14** **(1) RRUS4415 B25** **(1) RRUS4415 B30**	
55	Beta (120°)	1	**(1) NNH4-65B-R6H4**	**(1) RRUS4449 B5/B12** **(1) RRUS8843 B2/B66A**	
		2	-Empty-		
		3	**(1) Air 6449 B77D** **(1) Air 6419 B77G**		1
		4	**(1) NNH4-65B-R6H4**	**(1) RRUS4478 B14** **(1) RRUS4415 B25** **(1) RRUS4415 B30**	
55	Gamma (240°)	1	**(1) NNH4-65B-R6H4**	**(1) RRUS4449 B5/B12** **(1) RRUS8843 B2/B66A**	
		2	-Empty-		
		3	**(1) Air 6449 B77D** **(1) Air 6419 B77G**		1
		4	**(1) NNH4-65B-R6H4**	**(1) RRUS4478 B14** **(1) RRUS4415 B25** **(1) RRUS4415 B30**	

Note: 1. Proposed antennas are to be installed stacked vertically on the same pipe mount, RAD for antennas will be ±3ft to accommodate this

Additional Equipment:
(3) DC9-48-60-24-8C-EV

3) ANALYSIS PROCEDURE

Table 3-1 – Documents Provided

Document	Remarks	Reference	Date	Source
Most Recent Site Photos	N/A	N/A	9/23/21	JMBA
Original Building Drawings	Opus Architecture & Engineering	N/A	6/11/07	Nexius
Stealth Design Drawings	Raycap	N/A	6/24/22	Raycap
Stealth Design Analysis	Raycap	N/A	6/24/22	Raycap

Table 3-2 – Companion Document

Document	Remarks	Date	Note
Preliminary Construction Drawings	JMBA	8/10/21	Rev B
RFDS Scoping Document	Nexius	5/4/22	
Structural Analysis Report	JMBA	6/27/22	

3.1) Analysis Method

Risa-3D (version 17.0.4) is a finite element analysis software program was used for modeling and analyzing frame structures. The output from the analysis can be found in Appendix A.

Mathcad 15 is a mathematics software program used for creating hand calc templates. The output of these calculations can be found in Appendix A.

4) ANALYSIS RESULTS

Table 4-1 – Critical Section Capacity (Summary)

Member Type	% Capacity	Pass/Fail
Antenna Frame	2.5%	Pass
Support Structure	32.7%	Pass
Connection to Building	78.4%	Pass
Local Structure	10.6%	Pass
Overall	78.4%	Pass

4.1) Recommendations

The antenna mounts and their supporting structure will have sufficient capacity to carry the existing and proposed loads.

5) ASSUMPTIONS

- The analysis performed is to the theoretical capacity of the members and connections. No accommodations are taken for any damaged, rusted, deteriorated, or otherwise compromised member conditions. To this, the tower or structure is assumed to be properly maintained and monitored and this analysis cannot be considered to be a condition assessment of the structure.

- All loading conditions (dead, live, ice, wind, etc.) are calculated and considered in this analysis by the Structural Engineer.

- Minimum loading conditions are determined from the relevant codes and literature. Any higher loading conditions required by the local jurisdiction or structure owner should be made known to John M. Banks Architect immediately for analysis. No lesser conditions will be accommodated.

- If the Topographic Category would be 2, 3, or 4, then the Rigorous Topographic Factor Procedure (Method 2) is used. In the case it would be categorized at Topographic Category 1 (slope less than 10% or bottom half of feature), then Method 2 defaults to Method 1. In that situation, the Simplified Topographic Factor Procedure (Method 1) is used. Method 2 Topographic coefficients will be based on conservative engineering judgment and best available geographic survey data.

- Member sizes are assumed to be of standard AISC or manufacturer designations unless explicitly specified otherwise. The geometry of the tower or structure is assumed as schematic. Steel grade and concrete strength are assumed to be conservative standard and fully developed unless otherwise specified.

- The information provided to Westchester for analysis is assumed accurate and up to date as supplied. No independent efforts were taken by Westchester to verify the validity of the information supplied. If any additional information is presented at any time that contradicts what is referenced in the analysis, the analysis is invalid and must be performed again with the new information.

- Any reinforcement or modifications are assumed to be fully installed and functional.

- All welds are assumed to have been performed to current welding standards and are assumed to develop their full capacity and to be in good condition. In addition, all bolts and bolt-like anchors are assumed to be fully tightened, fastened, or bonded to the manufacturers' specifications and are assumed to have full capacity.

- Mount connections to towers are intentionally neglected from this analysis unless otherwise noted. Full rigorous analysis of these connections is not possible with standard methods. Typically, these connections are tested empirically by the mount manufacturer combined with full FEA analysis. Good engineering practice would demand that these critical connections are adequately designed. It reasonable to assume that a passing mount analysis can be taken to indicate the mount to tower connection is passing as well.

- Numerous connection details of large-scale structures are unobtainable and are omitted from the structural analysis. This includes, but is not limited to: bolts, welds, flanges, and small gusset plates. These connections are considered adequate and are therefore neglected from the analysis. In addition, in the absence of building plans, many wall, floor, and ceiling constructions can only be determined from observable field data and are supplemented by best judgment and experience.

- Antennas, dishes, feedlines, and any other such appurtenances are assumed adequate through manufacturer testing. No analysis is provided for the structural strength or stability of these items unless otherwise specified.

- Other carrier equipment that is unknown at the time of the analysis are conservatively estimated visually (size and weight) as this information may not be available.

- Antenna and other equipment small-scale mounting systems (equipment to mount pipe) are assumed structurally sound unless specifically called for in the analysis.

- Soil conditions and foundations are not considered unless specified in the analysis and have no deterioration or defects. For sites located on a building, only local effects of the equipment is considered unless otherwise specified. The overall structure of the building and its foundation are assumed to be unaffected by the telecom equipment.

- Any differences between the scope of work and that found at the site at any time prior to installation must be brought to the attention of Westchester immediately. Any changes or substitutions to any part of the scope of work must be brought to Westchester for explicit approval. Any changes made without prior approval will render the analysis and its conclusions invalid.

APPENDIX A

CALCULATIONS

John M Banks, Architect
604 Fox Glen
Barrington, IL 60010
PH: 847.277.0070
jbanks@westchesterservices.com

References:

1) 2018 International Building Code
2) ANSI TIA-222-H, Structural Standard for Antenna Supporting Structures and Antennas
3) AISC 360-10 Specification for Structural Steel Buildings
4) Original Building Drawings, by Opus Architects & Engineering, dated 6/11/07

Input

Wind Factors (as per TIA-222-H)

$V := 107$ *mph* — V_{nom} *per Ref. (2)*

$V_i := 40$ *mph* — *Basic wind speed with ice*

$V_m := 30$ *mph* — *Wind speed for concurrent man live load*

$t_i := 1.5 \cdot in$ — *Design ice thickness*

$G_H := 1.0$ — *Ref. (2), Chapter 16.6*

$R_c :=$ "II" — *Risk Category*

$K_d := 0.95$ — *Wind Direction Probability Factor, Ref. (2), Table 2-2*

$Ex :=$ "B" — *Exposure category. See Ref. (2), Table 2-4*

Terrain := — *Topographic Category. See Ref. (2), Section 2.6.6*

- (•) Flat
- ( ) Ridge
- ( ) Flat Top Ridge
- ( ) Hill
- ( ) Flat Top Hill
- ( ) Escarpment

"Flat" Terrain is defined as less than 10% slope. This determines the topographic category method used. Method 2 is used for all options except for 'flat', which defaults to Method 1.
See Ref (2), 2.6.6.2.2

$z_s := 696 ft$ — *Elevation above Sea Level of base of structure*

Does rooftop wind speed up factor apply (per Ref. (2) Section 2.6.7)?

query :=

- ( ) Yes
- (•) No

Ks conditions (must meet 1 to require Ks factor)
1. Building is 50ft in height or greater and unobstructed in a continuous 90deg quadrant by other buildings of comparable height from the windward wall for 2600ft or 20 times the height of the structure, whichever is less..
2. Building protrudes 50+ft above the average height of immediately adjacent buildings in a continuous 90deg quadrant.

Seismic data per ASCE7-16 Hazards database

SiteClass := "D"

$S_s := 0.129$ — $T_L := 12$ — $F_v := 2.4$

$S_1 := 0.066$ — $T := 1$ — $F_a := 1.6$

John M Banks, Architect
604 Fox Glen
Barrington, IL 60010
PH: 847.277.0070
jbanks@westchesterservices.com

IL4218
IL4218
FA#: 15515920
Client: Nexius/AT&T

Date: 6/29/2022
By: TH

Antennas/Radios

Antenna name/model

"not used"
NNH4-65B-R6H4
Air 6419 B77G
Air6449 B77D
"not used"
RRUS4415 B25/B30
RRUS4478 B14
RRUS4449 B5/B12
RRUS8843 B2/B66A
DC9

Elevation of antennas

$z_{ant} :=$

55	ft
55	
55	
55	
55	
55	
55	
55	
55	
55	

$N_{antenna} := 10$ *Number of antenna groups*

*Height of antennas**

$height_{ant} :=$

1	in
72	
28.3	
30.4	
1	
15	
14.9	
28	
15	
32.8	

*Width of antennas**

$width_{ant} :=$

1	in
19.6	
16.1	
15.9	
1	
13.2	
13.1	
10	
13.2	
10.25	

*Depth of antennas**

$depth_{ant} :=$

1	in
7.8	
7.6	
8.1	
1	
5.4	
7.3	
15	
9.25	
10.25	

Weight of antennas

$Weight_{ant} :=$

0	lbf
88.2	
66.1	
81.6	
0	
46	
60	
85	
70	
38	

Local Shielding Factor

$LocalShielding :=$

0.90
0.90
0.90
0.90
0.90
0.90
0.90
0.90
0.90
0.90

Typical Values:
x0.9 Per Ref (2) Chapter 16.6, all K.a factors for mount analyses are to be 0.9 for antennas and mount structures.

Antenna Shape?

$SHAPE :=$

1
1
1
1
1
1
1
1
1
0

Shape Guide:
0 = Round
1 = Flat
2 = Dish w/o Radome
3 = Dish w/ Radome
4 = Dish w/ Shroud
5 = Grid Dish

h & w for dishes are outer diameters.
Ellipse shape OK

$K_e = 0.975$ $K_d = 0.95$ $K_s = 1$ $\max(K_{z.ant}) = 0.833$ $\max(q_{z.ant}) = 22.619 \cdot psf$ *Wind pressure coeff.*

$K_1 = 0$ $K_2 = 0$ $\max(K_3) = 0$ $\max(K_{zt.ant}) = 1$

John M Banks, Architect
604 Fox Glen
Barrington, IL 60010
PH: 847.277.0070
jbanks@westchesterservices.com

Equipment Frame

The following matricies represent the antennas and equipment that are present on each position.

$$P1 := \begin{pmatrix} 2 \\ 8 \\ 9 \\ 0 \\ 0 \\ 0 \end{pmatrix} \quad P2 := \begin{pmatrix} 3 \\ 4 \\ 0 \\ 0 \\ 0 \\ 0 \end{pmatrix} \quad P3 := \begin{pmatrix} 0 \\ 0 \\ 0 \\ 0 \\ 0 \\ 0 \end{pmatrix} \quad P4 := \begin{pmatrix} 2 \\ 6 \\ 6 \\ 7 \\ 0 \\ 0 \end{pmatrix}$$

The antennas and radios will be mounted on a new antenna frame located entirely within the stealth screen. As such, they will incur no wind loading, and the ice and other gravity load will be acceptable by inspection on the antenna frame itself. The weight, however, will be considered for the connections and building structure loading.

John M Banks, Architect
604 Fox Glen
Barrington, IL 60010
PH: 847.277.0070
jbanks@westchesterservices.com

Connection to Structure

The proposed frame will be connected to the roof via Hilti HY-200 w/ HIT-Z rods, spaced 32" O.C. on all of the grillage beams connected to the roof. These anchors are to be installed into the existing wall grouted cells and shall be installed as near to the center of the cells as possible. As per Ref (4), the penthouse CMU wall is reinforced with #5 vertical bars every 32" (every fourth cell). Under the grillage beams will be a 1/4" leveling plate grout-leveled with Five Star Grout (or similar). The anchors will connect the grillage plate through the leveling plate, grout, and into the existing grouted cells.

Check anchors. Use 5/8" Hilti HY-270 anchors w/ 4" embed.

$n_{bolt} := 1$ *Number of anchors per node*

Reactions from RISA 3D

	Parallel to wall	*Perpendicular to wall*	
$Y_{max} := 0lbf$	$X_{max} := 351lbf$	$Z_{max} := 498lbf$	*Due to the weight of the structure, there will be no appreciable tension forces on the anchors.*

Anchor allowables

$T_{all} := 1590lbf$	$V_{par.all} := 1825lbf$	$V_{perp.all} := 655lbf$	*Allowble loads per anchor*

$n_{half} := \frac{n_{bolt}}{2}$ *It is assumed only the bolts on the far side of the prying action participate.*

$T_{max} := Y_{max}$

$$\left[\frac{T_{max}}{T_{all}} + \sqrt{\left(\frac{X_{max}}{V_{par.all}}\right)^2 + \left(\frac{Z_{max}}{V_{perp.all}}\right)^2}\right] = 78.425 \cdot \%$$ *< 100% OK*

John M Banks, Architect
604 Fox Glen
Barrington, IL 60010
PH: 847.277.0070
jbanks@westchesterservices.com

Check wall/parapet at connection. Wall is 8" thick reinforced CMU

$t := 8in$ $h := 18in$ $w := 32in$

$P_{max} := 1105lbf$ $V_{max} := 498lbf$ $M_{z.max} := 0lbf \cdot ft$

$e := 1in$ *Eccentricity due to assumed imperfections in construction*

$f'_m := 1000psi$ $E_m := 800ksi$ *Mortar strength*

$M := P_{max} \cdot e + V_{max} \cdot h + M_{z.max} = 839.083 \cdot lbf \cdot ft$ *Moment in parapet*

$I := \frac{w \cdot t^3}{12} = 1.365 \times 10^3 \cdot in^4$ *Moment of inertia*

$A := w \cdot t = 1.778\ ft^2$ *Cross-sectional area*

$r := \sqrt{\frac{I}{A}} = 2.309 \cdot in$ *Radius of gyration*

$\frac{h}{r} = 7.794$ *< 99, OK*

$F_a := \frac{1}{4} \cdot f'_m \cdot \left[1 - \left(\frac{h}{140 \cdot r}\right)^2\right] = 249.225\ psi$ *Allowable axial stress*

$f_a := \frac{P_{max}}{A} = 4.316\ psi$ *Axial stress*

$S := \frac{w \cdot t^2}{6} = 341.333 \cdot in^3$ *Section modulus*

$f_b := \frac{M}{S} = 29.499\ psi$ *Bending stress*

$F_b := \frac{1}{3} \cdot f'_m = 333.333\ psi$ *Allowable bending stress*

$\frac{f_a}{F_a} + \frac{f_b}{F_b} = 10.582 \cdot \%$ *Combined axial/bending stress*

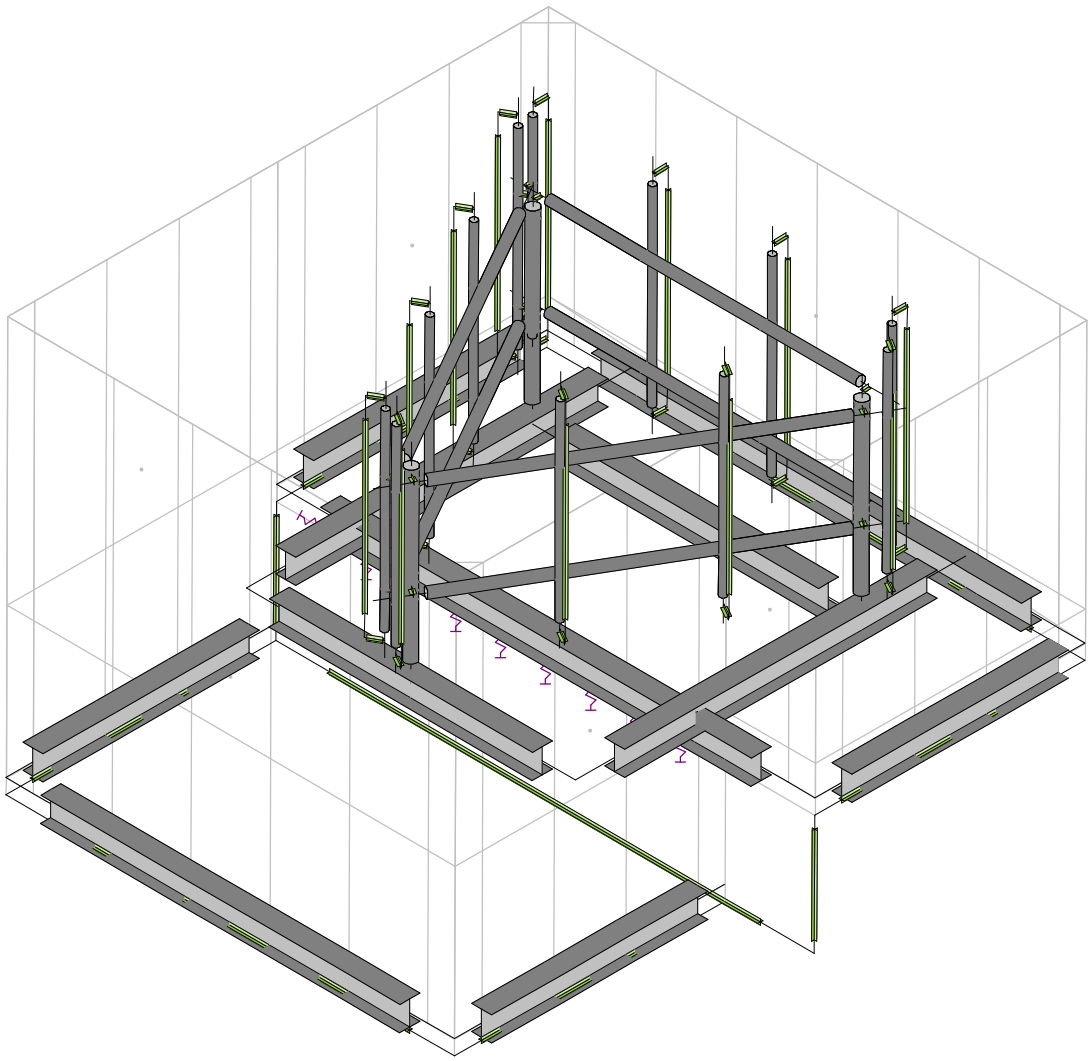
Y
Z
X

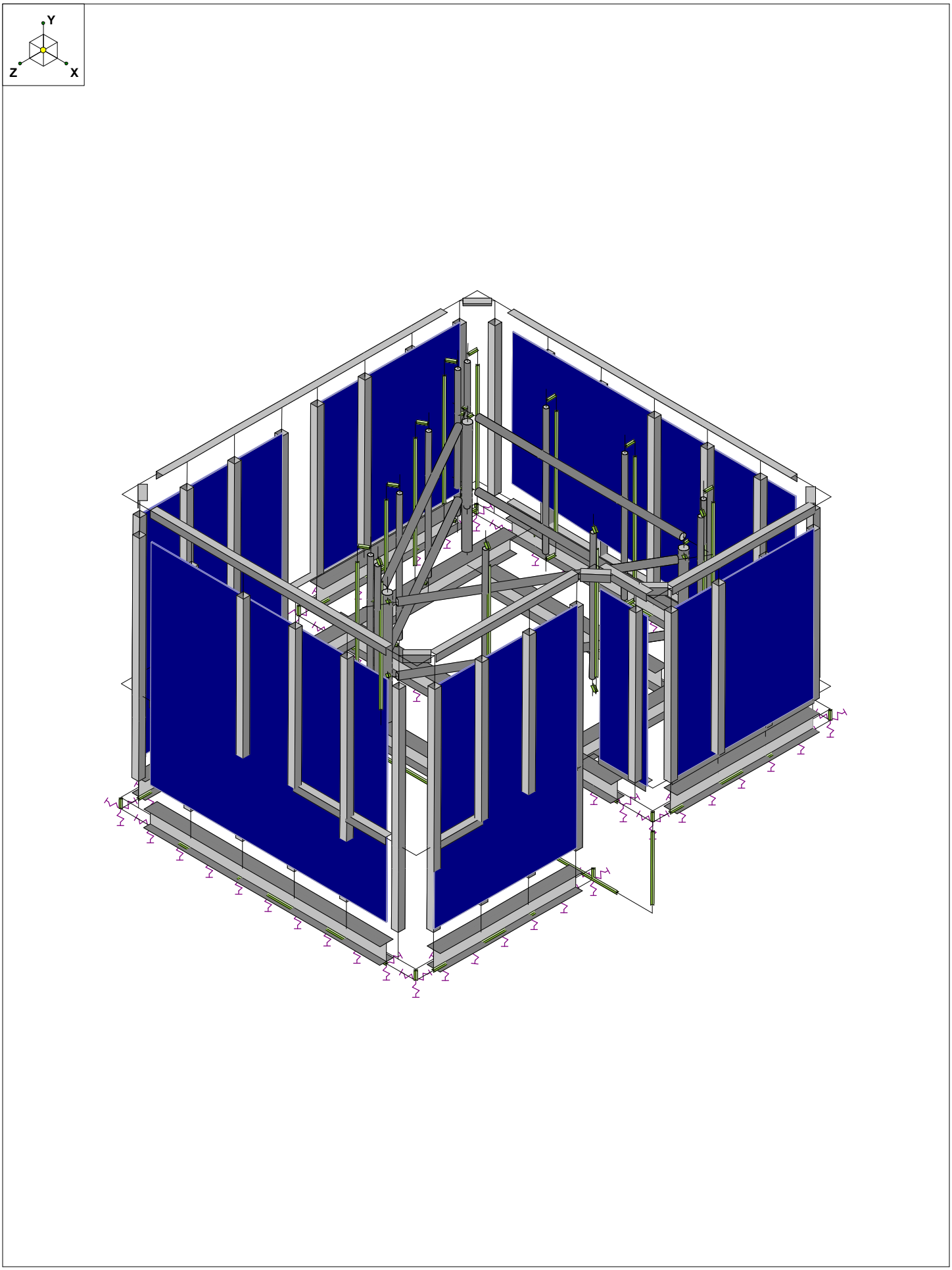
Y
Z
X

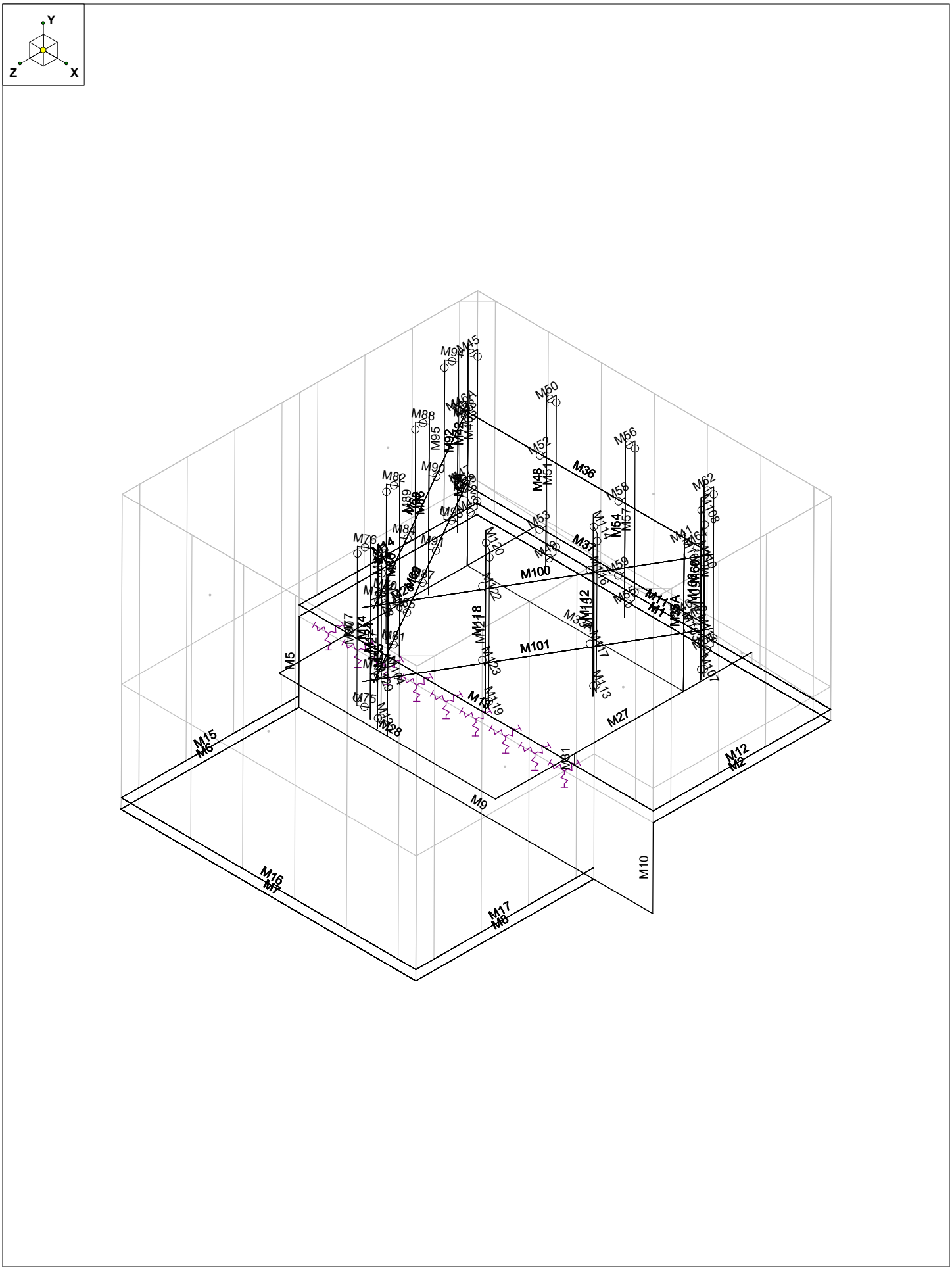
Y
Z
X
M36
M37
M100
M101
M5
M9
M10
M12
M2
M15
M6
M16
M7
M17
M8
M27

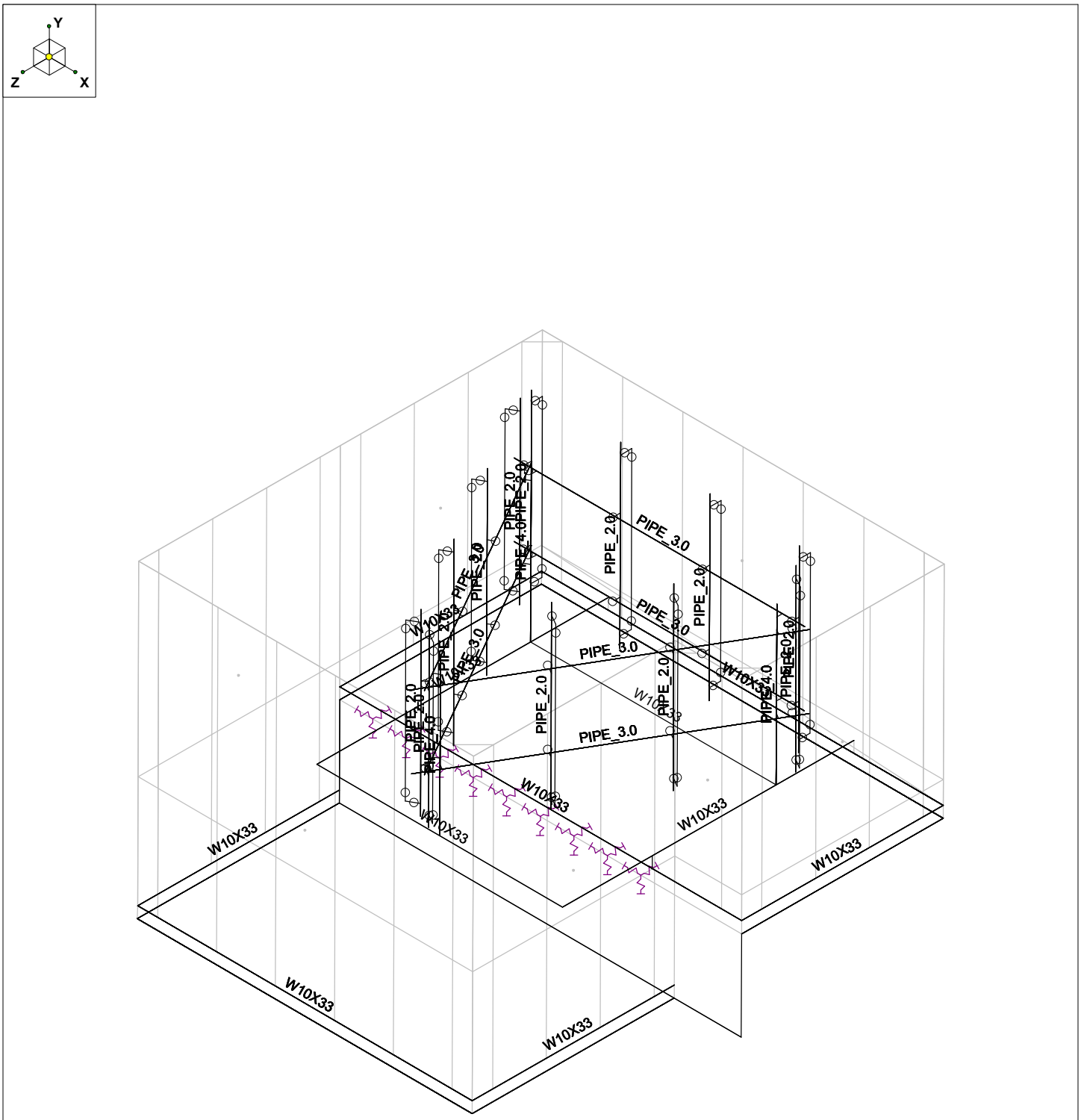
Y
Z
X
PIPE_2.0
PIPE_3.0
PIPE_4.0
W10X33

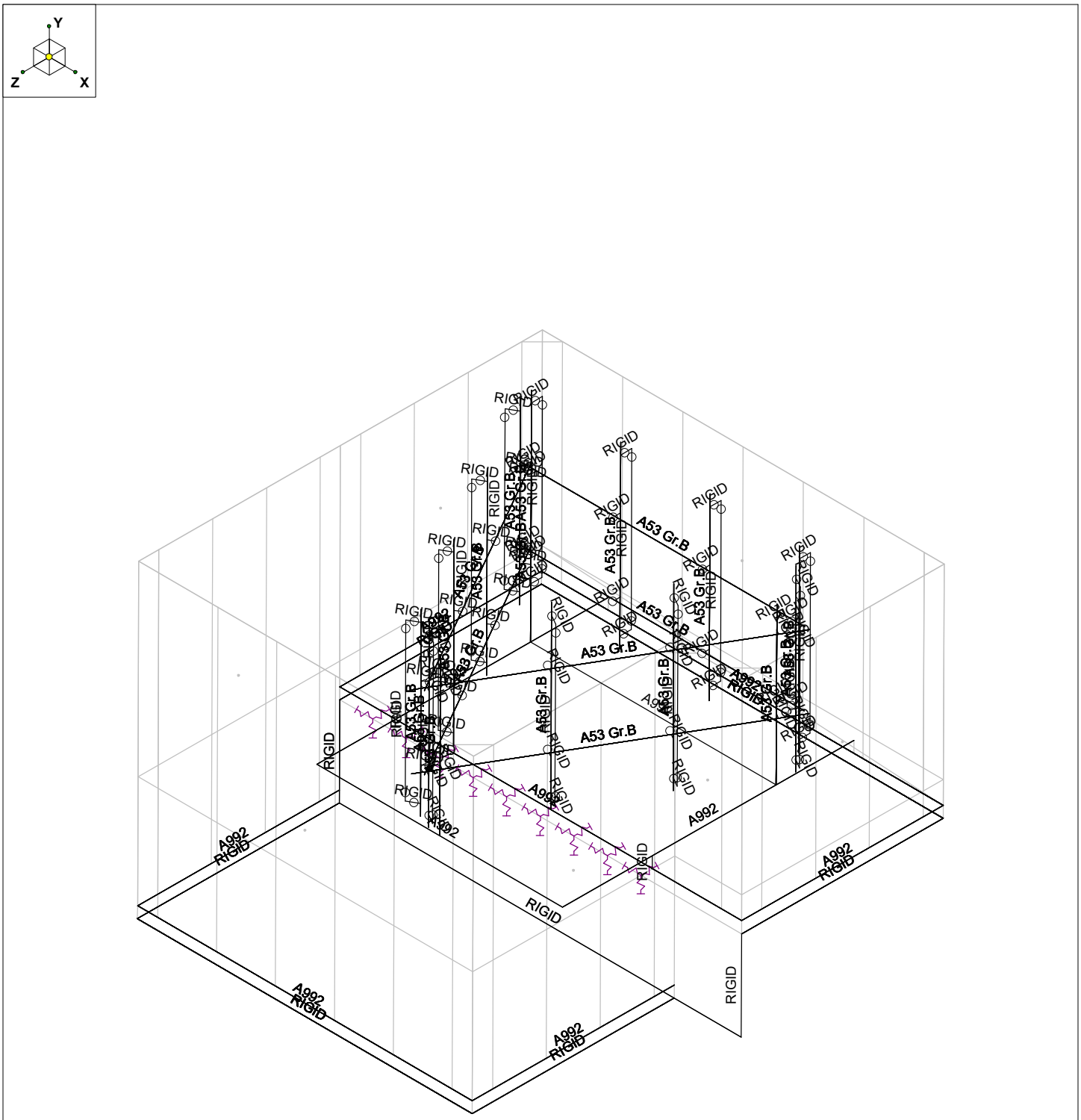
Y
Z
X
RIGID
A53 Gr.B
A992

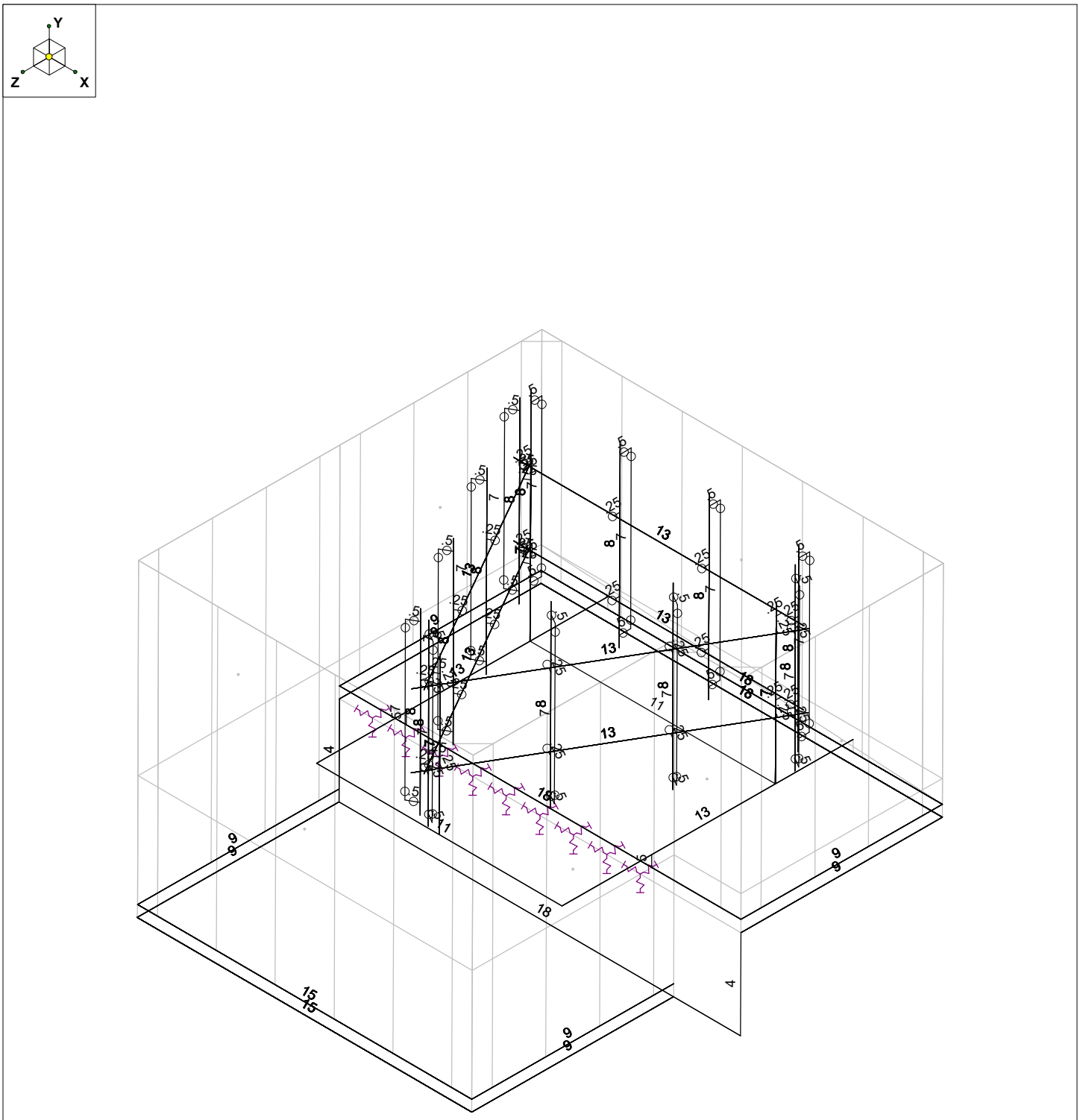

Member Length (ft) Displayed

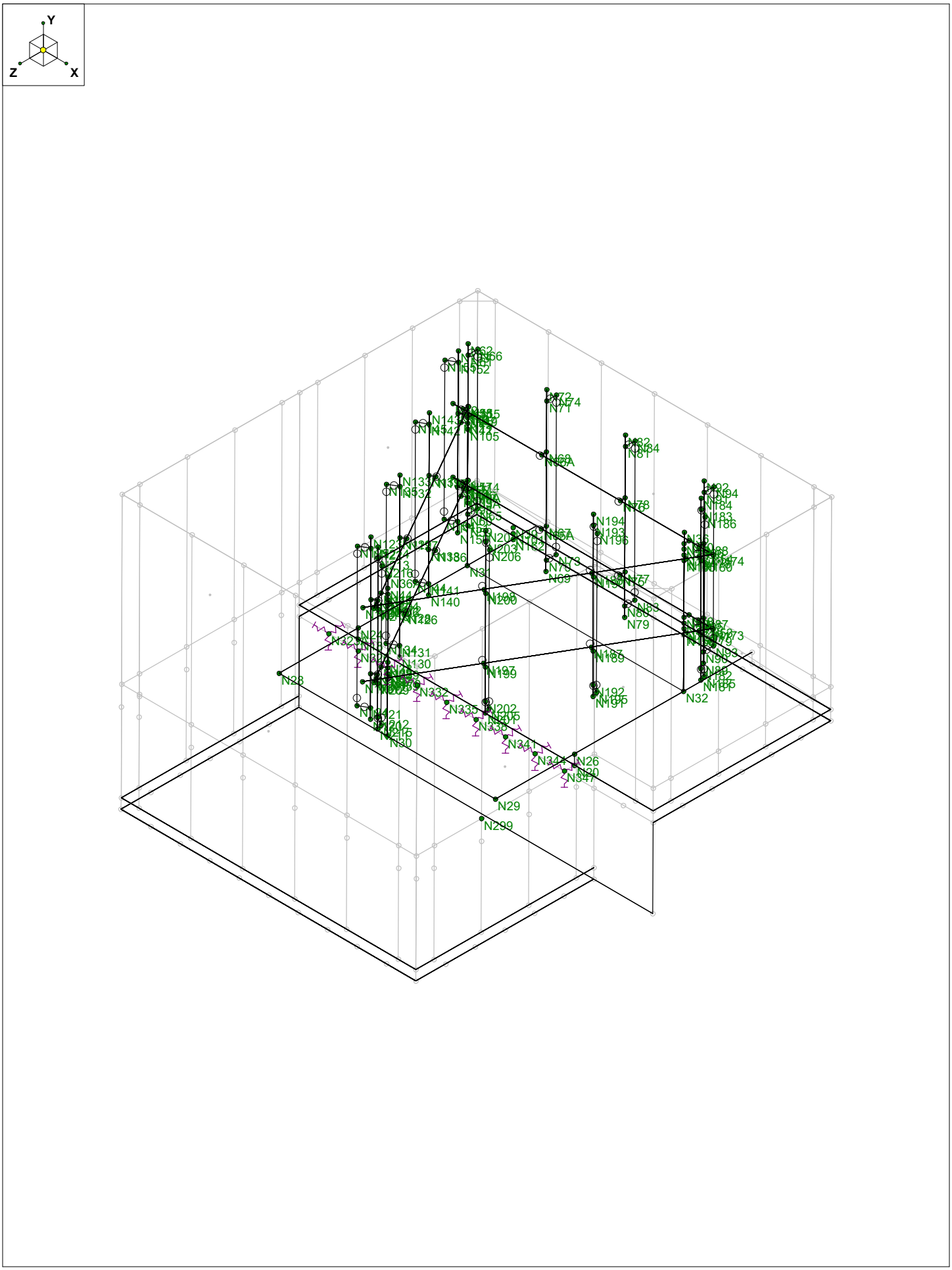
Y
Z
X
N28
N29
N299
N32
N26
N30
N31
N140
N105
N71
N81
N194
N193
N196
N206
N69
N79
N130
N332
N335
N338
N341
N344
N347
N192
N191
N189
N199
N202
N203
N186
N183
N184
N181
N93
N90

(Global) Model Settings

Display Sections for Member Calcs	5
Max Internal Sections for Member Calcs	97
Include Shear Deformation?	Yes
Increase Nailing Capacity for Wind?	Yes
Include Warping?	Yes
Trans Load Btwn Intersecting Wood Wall?	Yes
Area Load Mesh (in^2)	144
Merge Tolerance (in)	.12
P-Delta Analysis Tolerance	0.50%
Include P-Delta for Walls?	Yes
Automatically Iterate Stiffness for Walls?	Yes
Max Iterations for Wall Stiffness	3
Gravity Acceleration (ft/sec^2)	32.2
Wall Mesh Size (in)	24
Eigensolution Convergence Tol. (1.E-)	4
Vertical Axis	Y
Global Member Orientation Plane	XZ
Static Solver	Sparse Accelerated
Dynamic Solver	Accelerated Solver

Hot Rolled Steel Code	AISC 14th(360-10): LRFD
Adjust Stiffness?	Yes(Iterative)
RISAConnection Code	AISC 14th(360-10): LRFD
Cold Formed Steel Code	AISI S100-12: LRFD
Wood Code	AWC NDS-15: ASD
Wood Temperature	< 100F
Concrete Code	ACI 318-14
Masonry Code	ACI 530-13: ASD
Aluminum Code	AA ADM1-15: ASD - Building
Stainless Steel Code	AISC 14th(360-10): ASD
Adjust Stiffness?	Yes(Iterative)

Number of Shear Regions	4
Region Spacing Increment (in)	4
Biaxial Column Method	Exact Integration
Parme Beta Factor (PCA)	.65
Concrete Stress Block	Rectangular
Use Cracked Sections?	Yes
Use Cracked Sections Slab?	Yes
Bad Framing Warnings?	No
Unused Force Warnings?	Yes
Min 1 Bar Diam. Spacing?	No
Concrete Rebar Set	REBAR_SET_ASTMA615
Min % Steel for Column	1
Max % Steel for Column	8

(Global) Model Settings, Continued

Seismic Code	ASCE 7-10
Seismic Base Elevation (ft)	Not Entered
Add Base Weight?	Yes
Ct X	.02
Ct Z	.02
T X (sec)	Not Entered
T Z (sec)	Not Entered
R X	3
R Z	3
Ct Exp. X	.75
Ct Exp. Z	.75
SD1	1
SDS	1
S1	1
TL (sec)	5
Risk Cat	I or II
Drift Cat	Other
Om Z	1
Om X	1
Cd Z	4
Cd X	4
Rho Z	1
Rho X	1

Hot Rolled Steel Section Sets

	Label	Shape	Type	Design List	Material	Design Rul...	A [in2]	Iyy [in4]	Izz [in4]	J [in4]
1	Main Beams	W10X33	Beam	Wide Flange	A992	Typical	9.71	36.6	171	.583
2	Support Be...	W8X15	Beam	Wide Flange	A992	Typical	4.44	3.41	48	.137
3	Columns	PIPE_4.0	Column	Pipe	A53 Gr.B	Typical	2.96	6.82	6.82	13.6
4	Face Mem...	PIPE_3.0	Beam	Pipe	A53 Gr.B	Typical	2.07	2.85	2.85	5.69
5	Mount Pipes	PIPE_2.0	Column	Pipe	A53 Gr.B	Typical	1.02	.627	.627	1.25
6	Stealth Col...	HSS4X4X6	Column	Pipe	FRP	Typical	4.78	10.3	10.3	17.5
7	Stealth Face	L4X4X6	Beam	Single Angle	FRP	Typical	2.86	4.32	4.32	.141

Joint Coordinates and Temperatures

	Label	X [ft]	Y [ft]	Z [ft]	Temp [F]	Detach From Diap...
1	N1	0	0	0	0	
2	N2	0	0	-9	0	
3	N3	-18	0	0	0	
4	N4	-18	0	-9	0	
5	N5	0	-4	0	0	
6	N6	-18	-4	0	0	
7	N7	-18	-4	9	0	
8	N8	-3	-4	0	0	
9	N9	-3	-4	9	0	
10	N10	0	.5	0	0	
11	N11	0	.5	-9	0	
12	N12	-18	.5	0	0	
13	N13	-18	.5	-9	0	
14	N14	-18	-3.5	0	0	

Joint Coordinates and Temperatures (Continued)

	Label	X [ft]	Y [ft]	Z [ft]	Temp [F]	Detach From Diap...
15	N15	-18	-3.5	9	0	
16	N16	-3	-3.5	0	0	
17	N17	-3	-3.5	9	0	
18	N18	-15	.5	0	0	
19	N19	-15	.5	-9	0	
20	N20	-4	.5	0	0	
21	N21	-4	.5	-9	0	
22	N24	-15	1	0	0	
23	N25	-15	1	-9	0	
24	N26	-4	1	0	0	
25	N27	-4	1	-9	0	
26	N28	-15	1	4	0	
27	N29	-4	1	4	0	
28	N30	-9.5	1	4	0	
29	N33	-9.5	4	4	0	
30	N36A	-9.5	8	4	0	
31	N31	-15	1	-5.52628	0	
32	N32	-4	1	-5.52628	0	
33	N33A	-15	4	-5.52628	0	
34	N34	-4	4	-5.52628	0	
35	N35	-15	8	-5.52628	0	
36	N36	-4	8	-5.52628	0	
37	N39	-9.5	7	-2.350853	0	
38	N38	-9.5	4.25	4	0	
39	N39A	-15	4.25	-5.52628	0	
40	N40	-4	4.25	-5.52628	0	
41	N41	-9.5	7.25	4	0	
42	N42	-15	7.25	-5.52628	0	
43	N43	-4	7.25	-5.52628	0	
44	N44	-9.5	7.5	4	0	
45	N45	-15	7.5	-5.52628	0	
46	N46	-4	7.5	-5.52628	0	
47	N47	-15	4.25	-5.77628	0	
48	N48	-4	4.25	-5.77628	0	
49	N49	-15	7.5	-5.77628	0	
50	N50	-4	7.5	-5.77628	0	
51	N51	-16	4.25	-5.77628	0	
52	N52	-16	7.5	-5.77628	0	
53	N53	-3	4.25	-5.77628	0	
54	N54	-3	7.5	-5.77628	0	
55	N55	-15.5	4.25	-5.77628	0	
56	N56	-15.5	7.5	-5.77628	0	
57	N57	-15.5	4.25	-6.02628	0	
58	N58	-15.5	7.5	-6.02628	0	
59	N59	-15.5	2.25	-6.02628	0	
60	N60	-15.5	2.75	-6.02628	0	
61	N61	-15.5	9.75	-6.02628	0	
62	N62	-15.5	10.25	-6.02628	0	
63	N65	-15.5	2.75	-6.52628	0	
64	N66	-15.5	9.75	-6.52628	0	
65	N65A	-11.5	4.25	-5.77628	0	
66	N66A	-11.5	7.5	-5.77628	0	

Joint Coordinates and Temperatures (Continued)

	Label	X [ft]	Y [ft]	Z [ft]	Temp [F]	Detach From Diap...
67	N67	-11.5	4.25	-6.02628	0	
68	N68	-11.5	7.5	-6.02628	0	
69	N69	-11.5	2.25	-6.02628	0	
70	N70	-11.5	2.75	-6.02628	0	
71	N71	-11.5	9.75	-6.02628	0	
72	N72	-11.5	10.25	-6.02628	0	
73	N73	-11.5	2.75	-6.52628	0	
74	N74	-11.5	9.75	-6.52628	0	
75	N75	-7.5	4.25	-5.77628	0	
76	N76	-7.5	7.5	-5.77628	0	
77	N77	-7.5	4.25	-6.02628	0	
78	N78	-7.5	7.5	-6.02628	0	
79	N79	-7.5	2.25	-6.02628	0	
80	N80	-7.5	2.75	-6.02628	0	
81	N81	-7.5	9.75	-6.02628	0	
82	N82	-7.5	10.25	-6.02628	0	
83	N83	-7.5	2.75	-6.52628	0	
84	N84	-7.5	9.75	-6.52628	0	
85	N85	-3.5	4.25	-5.77628	0	
86	N86	-3.5	7.5	-5.77628	0	
87	N87	-3.5	4.25	-6.02628	0	
88	N88	-3.5	7.5	-6.02628	0	
89	N89	-3.5	2.25	-6.02628	0	
90	N90	-3.5	2.75	-6.02628	0	
91	N91	-3.5	9.75	-6.02628	0	
92	N92	-3.5	10.25	-6.02628	0	
93	N93	-3.5	2.75	-6.52628	0	
94	N94	-3.5	9.75	-6.52628	0	
95	N97	-9.5	3.75	4.	0	
96	N98	-15.	3.75	-5.52628	0	
97	N101	-9.5	6.75	-2.350853	0	
98	N104	-9.5	7	4.	0	
99	N105	-15.	7	-5.52628	0	
100	N108	-9.716507	4	4.125	0	
101	N109	-15.216507	4	-5.40128	0	
102	N110	-9.716507	7.25	4.125	0	
103	N111	-15.216507	7.25	-5.40128	0	
104	N112	-9.216507	4	4.991025	0	
105	N113	-9.216507	7.25	4.991025	0	
106	N114	-15.716507	4	-6.267305	0	
107	N115	-15.716507	7.25	-6.267305	0	
108	N116	-9.466507	4	4.558012	0	
109	N117	-9.466507	7.25	4.558012	0	
110	N118	-9.683013	4	4.683012	0	
111	N119	-9.683013	7.25	4.683012	0	
112	N120	-9.683013	2	4.683012	0	
113	N121	-9.683013	2.5	4.683012	0	
114	N122	-9.683013	9.5	4.683012	0	
115	N123	-9.683013	10	4.683012	0	
116	N124	-10.116026	2.5	4.933012	0	
117	N125	-10.116026	9.5	4.933012	0	
118	N126	-11.466507	4	1.093911	0	

Joint Coordinates and Temperatures (Continued)

	Label	X [ft]	Y [ft]	Z [ft]	Temp [F]	Detach From Diap...
119	N127	-11.466507	7.25	1.093911	0	
120	N128	-11.683013	4	1.218911	0	
121	N129	-11.683013	7.25	1.218911	0	
122	N130	-11.683013	2	1.218911	0	
123	N131	-11.683013	2.5	1.218911	0	
124	N132	-11.683013	9.5	1.218911	0	
125	N133	-11.683013	10	1.218911	0	
126	N134	-12.116026	2.5	1.468911	0	
127	N135	-12.116026	9.5	1.468911	0	
128	N136	-13.466507	4	-2.370191	0	
129	N137	-13.466507	7.25	-2.370191	0	
130	N138	-13.683013	4	-2.245191	0	
131	N139	-13.683013	7.25	-2.245191	0	
132	N140	-13.683013	2	-2.245191	0	
133	N141	-13.683013	2.5	-2.245191	0	
134	N142	-13.683013	9.5	-2.245191	0	
135	N143	-13.683013	10	-2.245191	0	
136	N144	-14.116026	2.5	-1.995191	0	
137	N145	-14.116026	9.5	-1.995191	0	
138	N146	-15.466507	4	-5.834292	0	
139	N147	-15.466507	7.25	-5.834292	0	
140	N148	-15.683013	4	-5.709292	0	
141	N149	-15.683013	7.25	-5.709292	0	
142	N150	-15.683013	2	-5.709292	0	
143	N151	-15.683013	2.5	-5.709292	0	
144	N152	-15.683013	9.5	-5.709292	0	
145	N153	-15.683013	10	-5.709292	0	
146	N154	-16.116026	2.5	-5.459292	0	
147	N155	-16.116026	9.5	-5.459292	0	
148	N158	-4.	3.5	-5.52628	0	
149	N159	-9.5	3.5	4.	0	
150	N162	-9.5	6.5	-2.350853	0	
151	N163	-4.	3.75	-5.52628	0	
152	N165	-4.	6.75	-5.52628	0	
153	N166	-9.5	6.75	4.	0	
154	N167	-4.	7	-5.52628	0	
155	N169	-3.783493	3.75	-5.40128	0	
156	N170	-9.283493	3.75	4.125	0	
157	N171	-3.783493	7	-5.40128	0	
158	N172	-9.283493	7	4.125	0	
159	N173	-3.283493	3.75	-6.267305	0	
160	N174	-3.283493	7	-6.267305	0	
161	N175	-9.783493	3.75	4.991025	0	
162	N176	-9.783493	7	4.991025	0	
163	N177	-3.533493	3.75	-5.834292	0	
164	N178	-3.533493	7	-5.834292	0	
165	N179	-3.316987	3.75	-5.709292	0	
166	N180	-3.316987	7	-5.709292	0	
167	N181	-3.316987	1.75	-5.709292	0	
168	N182	-3.316987	2.25	-5.709292	0	
169	N183	-3.316987	9.25	-5.709292	0	
170	N184	-3.316987	9.75	-5.709292	0	

Joint Coordinates and Temperatures (Continued)

	Label	X [ft]	Y [ft]	Z [ft]	Temp [F]	Detach From Diap...
171	N185	-2.883974	2.25	-5.459292	0	
172	N186	-2.883974	9.25	-5.459292	0	
173	N187	-5.533493	3.75	-2.370191	0	
174	N188	-5.533493	7	-2.370191	0	
175	N189	-5.316987	3.75	-2.245191	0	
176	N190	-5.316987	7	-2.245191	0	
177	N191	-5.316987	1.75	-2.245191	0	
178	N192	-5.316987	2.25	-2.245191	0	
179	N193	-5.316987	9.25	-2.245191	0	
180	N194	-5.316987	9.75	-2.245191	0	
181	N195	-4.883974	2.25	-1.995191	0	
182	N196	-4.883974	9.25	-1.995191	0	
183	N197	-7.533493	3.75	1.093911	0	
184	N198	-7.533493	7	1.093911	0	
185	N199	-7.316987	3.75	1.218911	0	
186	N200	-7.316987	7	1.218911	0	
187	N201	-7.316987	1.75	1.218911	0	
188	N202	-7.316987	2.25	1.218911	0	
189	N203	-7.316987	9.25	1.218911	0	
190	N204	-7.316987	9.75	1.218911	0	
191	N205	-6.883974	2.25	1.468911	0	
192	N206	-6.883974	9.25	1.468911	0	
193	N207	-9.533493	3.75	4.558012	0	
194	N208	-9.533493	7	4.558012	0	
195	N209	-9.316987	3.75	4.683012	0	
196	N210	-9.316987	7	4.683012	0	
197	N211	-9.316987	1.75	4.683012	0	
198	N212	-9.316987	2.25	4.683012	0	
199	N213	-9.316987	9.25	4.683012	0	
200	N214	-9.316987	9.75	4.683012	0	
201	N215	-8.883974	2.25	4.933012	0	
202	N216	-8.883974	9.25	4.933012	0	
203	N209A	0	1.5	0	0	
204	N210A	0	1.5	-9	0	
205	N211A	-18	1.5	0	0	
206	N212A	-18	1.5	-9	0	
207	N213A	0	9.833	0	0	
208	N214A	0	9.833	-9	0	
209	N215A	-18	9.833	0	0	
210	N216A	-18	9.833	-9	0	
211	N211B	-17.1	.5	-9	0	
212	N212B	-17.1	1.5	-9	0	
213	N213B	-17.1	9.833	-9	0	
214	N214B	-14.4	.5	-9	0	
215	N215B	-14.4	1.5	-9	0	
216	N216B	-14.4	9.833	-9	0	
217	N217	-11.7	.5	-9	0	
218	N218	-11.7	1.5	-9	0	
219	N219	-11.7	9.833	-9	0	
220	N220	-9.	.5	-9	0	
221	N221	-9.	1.5	-9	0	
222	N222	-9.	9.833	-9	0	

Joint Coordinates and Temperatures (Continued)

	Label	X [ft]	Y [ft]	Z [ft]	Temp [F]	Detach From Diap...
223	N223	-6.3	.5	-9	0	
224	N224	-6.3	1.5	-9	0	
225	N225	-6.3	9.833	-9	0	
226	N226	-3.6	.5	-9	0	
227	N227	-3.6	1.5	-9	0	
228	N228	-3.6	9.833	-9	0	
229	N229	-0.9	.5	-9	0	
230	N230	-0.9	1.5	-9	0	
231	N231	-0.9	9.833	-9	0	
232	N232	-18	.5	9	0	
233	N233	-3	.5	9	0	
234	N234	-18	1.5	9	0	
235	N235	-3	1.5	9	0	
236	N236	-18	9.833	9	0	
237	N237	-3	9.833	9	0	
238	N238	-17.1	-3.5	9	0	
239	N239	-17.1	.5	9	0	
240	N240	-17.1	1.5	9	0	
241	N241	-17.1	9.833	9	0	
242	N242	-14.46	-3.5	9	0	
243	N243	-14.46	.5	9	0	
244	N244	-14.46	1.5	9	0	
245	N245	-14.46	9.833	9	0	
246	N246	-11.82	-3.5	9	0	
247	N247	-11.82	.5	9	0	
248	N248	-11.82	1.5	9	0	
249	N249	-11.82	9.833	9	0	
250	N250	-9.18	-3.5	9	0	
251	N251	-9.18	.5	9	0	
252	N252	-9.18	1.5	9	0	
253	N253	-9.18	9.833	9	0	
254	N254	-6.54	-3.5	9	0	
255	N255	-6.54	.5	9	0	
256	N256	-6.54	1.5	9	0	
257	N257	-6.54	9.833	9	0	
258	N258	-3.9	-3.5	9	0	
259	N259	-3.9	.5	9	0	
260	N260	-3.9	1.5	9	0	
261	N261	-3.9	9.833	9	0	
262	N262	0	.5	-8.1	0	
263	N263	-18	.5	-8.1	0	
264	N264	0	1.5	-8.1	0	
265	N265	-18	1.5	-8.1	0	
266	N266	0	9.833	-8.1	0	
267	N267	-18	9.833	-8.1	0	
268	N268	0	.5	-5.7	0	
269	N269	-18	.5	-5.7	0	
270	N270	0	1.5	-5.7	0	
271	N271	-18	1.5	-5.7	0	
272	N272	0	9.833	-5.7	0	
273	N273	-18	9.833	-5.7	0	
274	N274	0	.5	-3.3	0	

Joint Coordinates and Temperatures (Continued)

	Label	X [ft]	Y [ft]	Z [ft]	Temp [F]	Detach From Diap...
275	N275	-18	.5	-3.3	0	
276	N276	0	1.5	-3.3	0	
277	N277	-18	1.5	-3.3	0	
278	N278	0	9.833	-3.3	0	
279	N279	-18	9.833	-3.3	0	
280	N280	0	.5	-0.9	0	
281	N281	-18	.5	-0.9	0	
282	N282	0	1.5	-0.9	0	
283	N283	-18	1.5	-0.9	0	
284	N284	0	9.833	-0.9	0	
285	N285	-18	9.833	-0.9	0	
286	N286	-18	-3.5	8.1	0	
287	N287	-3	-3.5	8.1	0	
288	N288	-18	.5	8.1	0	
289	N289	-3	.5	8.1	0	
290	N290	-18	1.5	8.1	0	
291	N291	-3	1.5	8.1	0	
292	N292	-18	9.833	8.1	0	
293	N293	-3	9.833	8.1	0	
294	N294	-18	-3.5	5.7	0	
295	N295	-3	-3.5	5.7	0	
296	N296	-18	.5	5.7	0	
297	N297	-3	.5	5.7	0	
298	N298	-18	1.5	5.7	0	
299	N299	-3	1.5	5.7	0	
300	N300	-18	9.833	5.7	0	
301	N301	-3	9.833	5.7	0	
302	N302	-18	-3.5	3.3	0	
303	N303	-3	-3.5	3.3	0	
304	N304	-18	.5	3.3	0	
305	N305	-3	.5	3.3	0	
306	N306	-18	1.5	3.3	0	
307	N307	-3	1.5	3.3	0	
308	N308	-18	9.833	3.3	0	
309	N309	-3	9.833	3.3	0	
310	N310	-18	-3.5	0.9	0	
311	N311	-3	-3.5	0.9	0	
312	N312	-18	.5	0.9	0	
313	N313	-3	.5	0.9	0	
314	N314	-18	1.5	0.9	0	
315	N315	-3	1.5	0.9	0	
316	N316	-18	9.833	0.9	0	
317	N317	-3	9.833	0.9	0	
318	N318	-3	.5	0	0	
319	N319	-3	1.5	0	0	
320	N320	-3	9.833	0	0	
321	N322	-0.9	.5	0.	0	
322	N323	-0.9	9.833	0.	0	
323	N326	-15	0	0	0	
324	N327	-15	0	-9	0	
325	N328	-15	-4	9	0	
326	N332	-12	0	0	0	

Joint Coordinates and Temperatures (Continued)

	Label	X [ft]	Y [ft]	Z [ft]	Temp [F]	Detach From Diap...
327	N333	-12	0	-9	0	
328	N334	-12	-4	9	0	
329	N338	-9	0	0	0	
330	N339	-9	0	-9	0	
331	N340	-9	-4	9	0	
332	N344	-6	0	0	0	
333	N345	-6	0	-9	0	
334	N346	-6	-4	9	0	
335	N350	-3	0	0	0	
336	N351	-3	0	-9	0	
337	N358	0	0	-3	0	
338	N359	-18	0	-3	0	
339	N360	-18	-4	6	0	
340	N361	-3	-4	6	0	
341	N366	0	0	-6	0	
342	N367	-18	0	-6	0	
343	N368	-18	-4	3	0	
344	N369	-3	-4	3	0	
345	N374	-2	9.833	0	0	

Hot Rolled Steel Properties

	Label	E [ksi]	G [ksi]	Nu	Therm (/1E...	Density[k/ft...	Yield[ksi]	Ry	Fu[ksi]	Rt
1	A992	29000	11154	.3	.65	.49	50	1.1	65	1.1
2	A36 Gr.36	29000	11154	.3	.65	.49	36	1.5	58	1.2
3	A572 Gr.50	29000	11154	.3	.65	.49	50	1.1	65	1.1
4	A500 Gr.B RND	29000	11154	.3	.65	.527	42	1.4	58	1.3
5	A500 Gr.B Rect	29000	11154	.3	.65	.527	46	1.4	58	1.3
6	A53 Gr.B	29000	11154	.3	.65	.49	35	1.6	60	1.2
7	A1085	29000	11154	.3	.65	.49	50	1.4	65	1.3
8	FRP	2800	450	.35	.44	.12	16.67	1.5	30	1.2

Member Primary Data

	Label	I Joint	J Joint	K Joint	Rotate(deg)	Section/Shape	Type	Design List	Material	Design Rules
1	M1	N4	N2			RIGID	None	None	RIGID	Typical
2	M2	N2	N1			RIGID	None	None	RIGID	Typical
3	M3	N1	N3			RIGID	None	None	RIGID	Typical
4	M4	N3	N4			RIGID	None	None	RIGID	Typical
5	M5	N3	N6			RIGID	None	None	RIGID	Typical
6	M6	N6	N7			RIGID	None	None	RIGID	Typical
7	M7	N7	N9			RIGID	None	None	RIGID	Typical
8	M8	N9	N8			RIGID	None	None	RIGID	Typical
9	M9	N6	N5			RIGID	None	None	RIGID	Typical
10	M10	N5	N1			RIGID	None	None	RIGID	Typical
11	M11	N13	N11			Main Beams	Beam	Wide Flange	A992	Typical
12	M12	N11	N10			Main Beams	Beam	Wide Flange	A992	Typical
13	M13	N10	N12			Main Beams	Beam	Wide Flange	A992	Typical
14	M14	N12	N13			Main Beams	Beam	Wide Flange	A992	Typical
15	M15	N14	N15			Main Beams	Beam	Wide Flange	A992	Typical
16	M16	N15	N17			Main Beams	Beam	Wide Flange	A992	Typical

Member Primary Data (Continued)

	Label	I Joint	J Joint	K Joint	Rotate(deg)	Section/Shape	Type	Design List	Material	Design Rules
17	M17	N17	N16			Main Beams	Beam	Wide Flange	A992	Typical
18	M18	N7	N15			RIGID	None	None	RIGID	Typical
19	M19	N9	N17			RIGID	None	None	RIGID	Typical
20	M20	N8	N16			RIGID	None	None	RIGID	Typical
21	M22	N3	N12			RIGID	None	None	RIGID	Typical
22	M23	N4	N13			RIGID	None	None	RIGID	Typical
23	M24	N2	N11			RIGID	None	None	RIGID	Typical
24	M25	N1	N10			RIGID	None	None	RIGID	Typical
25	M26	N28	N25			Main Beams	Beam	Wide Flange	A992	Typical
26	M27	N29	N27			Main Beams	Beam	Wide Flange	A992	Typical
27	M28	N28	N29			Main Beams	Beam	Wide Flange	A992	Typical
28	M30	N18	N24			RIGID	None	None	RIGID	Typical
29	M31	N20	N26			RIGID	None	None	RIGID	Typical
30	M32	N21	N27			RIGID	None	None	RIGID	Typical
31	M33	N19	N25			RIGID	None	None	RIGID	Typical
32	M35	N30	N36A			PIPE 4.0	Column	Wide Flange	A53 Gr.B	Typical
33	M33A	N31	N32			Main Beams	Beam	Wide Flange	A992	Typical
34	M34	N31	N35			PIPE 4.0	Column	Wide Flange	A53 Gr.B	Typical
35	M35A	N32	N36			PIPE 4.0	Column	Wide Flange	A53 Gr.B	Typical
36	M36	N52	N54			Face Members	Beam	Pipe	A53 Gr.B	Typical
37	M37	N51	N53			Face Members	Beam	Pipe	A53 Gr.B	Typical
38	M38	N45	N49			RIGID	None	None	RIGID	Typical
39	M39	N39A	N47			RIGID	None	None	RIGID	Typical
40	M40	N40	N48			RIGID	None	None	RIGID	Typical
41	M41	N46	N50			RIGID	None	None	RIGID	Typical
42	M42	N59	N62			Mount Pipes	Column	Pipe	A53 Gr.B	Typical
43	M43	N60	N65			RIGID	None	None	RIGID	Typical
44	M45	N61	N66			RIGID	None	None	RIGID	Typical
45	M46	N66	N65			RIGID	None	None	RIGID	Typical
46	M46A	N56	N58			RIGID	None	None	RIGID	Typical
47	M47	N55	N57			RIGID	None	None	RIGID	Typical
48	M48	N69	N72			Mount Pipes	Column	Pipe	A53 Gr.B	Typical
49	M49	N70	N73			RIGID	None	None	RIGID	Typical
50	M50	N71	N74			RIGID	None	None	RIGID	Typical
51	M51	N74	N73			RIGID	None	None	RIGID	Typical
52	M52	N66A	N68			RIGID	None	None	RIGID	Typical
53	M53	N65A	N67			RIGID	None	None	RIGID	Typical
54	M54	N79	N82			Mount Pipes	Column	Pipe	A53 Gr.B	Typical
55	M55	N80	N83			RIGID	None	None	RIGID	Typical
56	M56	N81	N84			RIGID	None	None	RIGID	Typical
57	M57	N84	N83			RIGID	None	None	RIGID	Typical
58	M58	N76	N78			RIGID	None	None	RIGID	Typical
59	M59	N75	N77			RIGID	None	None	RIGID	Typical
60	M60	N89	N92			Mount Pipes	Column	Pipe	A53 Gr.B	Typical
61	M61	N90	N93			RIGID	None	None	RIGID	Typical
62	M62	N91	N94			RIGID	None	None	RIGID	Typical
63	M63	N94	N93			RIGID	None	None	RIGID	Typical
64	M64	N86	N88			RIGID	None	None	RIGID	Typical
65	M65	N85	N87			RIGID	None	None	RIGID	Typical
66	M68	N113	N115			Face Members	Beam	Pipe	A53 Gr.B	Typical
67	M69	N112	N114			Face Members	Beam	Pipe	A53 Gr.B	Typical
68	M70	N41	N110			RIGID	None	None	RIGID	Typical

Member Primary Data (Continued)

	Label	I Joint	J Joint	K Joint	Rotate(deg)	Section/Shape	Type	Design List	Material	Design Rules
69	M71	N33	N108			RIGID	None	None	RIGID	Typical
70	M72	N33A	N109			RIGID	None	None	RIGID	Typical
71	M73	N42	N111			RIGID	None	None	RIGID	Typical
72	M74	N120	N123			Mount Pipes	Column	Pipe	A53 Gr.B	Typical
73	M75	N121	N124			RIGID	None	None	RIGID	Typical
74	M76	N122	N125			RIGID	None	None	RIGID	Typical
75	M77	N125	N124			RIGID	None	None	RIGID	Typical
76	M78	N117	N119			RIGID	None	None	RIGID	Typical
77	M79	N116	N118			RIGID	None	None	RIGID	Typical
78	M80	N130	N133			Mount Pipes	Column	Pipe	A53 Gr.B	Typical
79	M81	N131	N134			RIGID	None	None	RIGID	Typical
80	M82	N132	N135			RIGID	None	None	RIGID	Typical
81	M83	N135	N134			RIGID	None	None	RIGID	Typical
82	M84	N127	N129			RIGID	None	None	RIGID	Typical
83	M85	N126	N128			RIGID	None	None	RIGID	Typical
84	M86	N140	N143			Mount Pipes	Column	Pipe	A53 Gr.B	Typical
85	M87	N141	N144			RIGID	None	None	RIGID	Typical
86	M88	N142	N145			RIGID	None	None	RIGID	Typical
87	M89	N145	N144			RIGID	None	None	RIGID	Typical
88	M90	N137	N139			RIGID	None	None	RIGID	Typical
89	M91	N136	N138			RIGID	None	None	RIGID	Typical
90	M92	N150	N153			Mount Pipes	Column	Pipe	A53 Gr.B	Typical
91	M93	N151	N154			RIGID	None	None	RIGID	Typical
92	M94	N152	N155			RIGID	None	None	RIGID	Typical
93	M95	N155	N154			RIGID	None	None	RIGID	Typical
94	M96	N147	N149			RIGID	None	None	RIGID	Typical
95	M97	N146	N148			RIGID	None	None	RIGID	Typical
96	M100	N174	N176			Face Members	Beam	Pipe	A53 Gr.B	Typical
97	M101	N173	N175			Face Members	Beam	Pipe	A53 Gr.B	Typical
98	M102	N167	N171			RIGID	None	None	RIGID	Typical
99	M103	N163	N169			RIGID	None	None	RIGID	Typical
100	M104	N97	N170			RIGID	None	None	RIGID	Typical
101	M105	N104	N172			RIGID	None	None	RIGID	Typical
102	M106	N181	N184			Mount Pipes	Column	Pipe	A53 Gr.B	Typical
103	M107	N182	N185			RIGID	None	None	RIGID	Typical
104	M108	N183	N186			RIGID	None	None	RIGID	Typical
105	M109	N186	N185			RIGID	None	None	RIGID	Typical
106	M110	N178	N180			RIGID	None	None	RIGID	Typical
107	M111	N177	N179			RIGID	None	None	RIGID	Typical
108	M112	N191	N194			Mount Pipes	Column	Pipe	A53 Gr.B	Typical
109	M113	N192	N195			RIGID	None	None	RIGID	Typical
110	M114	N193	N196			RIGID	None	None	RIGID	Typical
111	M115	N196	N195			RIGID	None	None	RIGID	Typical
112	M116	N188	N190			RIGID	None	None	RIGID	Typical
113	M117	N187	N189			RIGID	None	None	RIGID	Typical
114	M118	N201	N204			Mount Pipes	Column	Pipe	A53 Gr.B	Typical
115	M119	N202	N205			RIGID	None	None	RIGID	Typical
116	M120	N203	N206			RIGID	None	None	RIGID	Typical
117	M121	N206	N205			RIGID	None	None	RIGID	Typical
118	M122	N198	N200			RIGID	None	None	RIGID	Typical
119	M123	N197	N199			RIGID	None	None	RIGID	Typical
120	M124	N211	N214			Mount Pipes	Column	Pipe	A53 Gr.B	Typical

Member Primary Data (Continued)

	Label	I Joint	J Joint	K Joint	Rotate(deg)	Section/Shape	Type	Design List	Material	Design Rules
121	M125	N212	N215			RIGID	None	None	RIGID	Typical
122	M126	N213	N216			RIGID	None	None	RIGID	Typical
123	M127	N216	N215			RIGID	None	None	RIGID	Typical
124	M128	N208	N210			RIGID	None	None	RIGID	Typical
125	M129	N207	N209			RIGID	None	None	RIGID	Typical
126	M126A	N211B	N213B			Stealth Column	Column	Pipe	FRP	Typical
127	M127A	N214B	N216B			Stealth Column	Column	Pipe	FRP	Typical
128	M128A	N217	N219			Stealth Column	Column	Pipe	FRP	Typical
129	M129A	N220	N222			Stealth Column	Column	Pipe	FRP	Typical
130	M130	N223	N225			Stealth Column	Column	Pipe	FRP	Typical
131	M131	N226	N228			Stealth Column	Column	Pipe	FRP	Typical
132	M132	N229	N231			Stealth Column	Column	Pipe	FRP	Typical
133	M133	N238	N241			Stealth Column	Column	Pipe	FRP	Typical
134	M134	N242	N245			Stealth Column	Column	Pipe	FRP	Typical
135	M135	N246	N249			Stealth Column	Column	Pipe	FRP	Typical
136	M136	N250	N253			Stealth Column	Column	Pipe	FRP	Typical
137	M137	N254	N257			Stealth Column	Column	Pipe	FRP	Typical
138	M138	N258	N261			Stealth Column	Column	Pipe	FRP	Typical
139	M139	N263	N267			Stealth Column	Column	Pipe	FRP	Typical
140	M140	N262	N266			Stealth Column	Column	Pipe	FRP	Typical
141	M141	N269	N273			Stealth Column	Column	Pipe	FRP	Typical
142	M142	N268	N272			Stealth Column	Column	Pipe	FRP	Typical
143	M143	N275	N279			Stealth Column	Column	Pipe	FRP	Typical
144	M144	N274	N278			Stealth Column	Column	Pipe	FRP	Typical
145	M145	N281	N285			Stealth Column	Column	Pipe	FRP	Typical
146	M146	N280	N284			Stealth Column	Column	Pipe	FRP	Typical
147	M147	N286	N292			Stealth Column	Column	Pipe	FRP	Typical
148	M148	N287	N293			Stealth Column	Column	Pipe	FRP	Typical
149	M149	N294	N300			Stealth Column	Column	Pipe	FRP	Typical
150	M150	N295	N301			Stealth Column	Column	Pipe	FRP	Typical
151	M151	N302	N308			Stealth Column	Column	Pipe	FRP	Typical
152	M152	N303	N309			Stealth Column	Column	Pipe	FRP	Typical
153	M153	N310	N316			Stealth Column	Column	Pipe	FRP	Typical
154	M154	N311	N317			Stealth Column	Column	Pipe	FRP	Typical
155	M155	N216A	N214A		90	Stealth Face	Beam	Single Angle	FRP	Typical
156	M156	N212A	N210A		90	Stealth Face	Beam	Single Angle	FRP	Typical
157	M157	N210A	N209A		90	Stealth Face	Beam	Single Angle	FRP	Typical
158	M158	N214A	N213A		90	Stealth Face	Beam	Single Angle	FRP	Typical
159	M159	N236	N216A		90	Stealth Face	Beam	Single Angle	FRP	Typical
160	M160	N234	N212A		90	Stealth Face	Beam	Single Angle	FRP	Typical
161	M161	N235	N234		90	Stealth Face	Beam	Single Angle	FRP	Typical
162	M162	N319	N235		90	Stealth Face	Beam	Single Angle	FRP	Typical
163	M163	N320	N237		90	Stealth Face	Beam	Single Angle	FRP	Typical
164	M164	N237	N236		90	Stealth Face	Beam	Single Angle	FRP	Typical
165	M165	N209A	N319		90	Stealth Face	Beam	Single Angle	FRP	Typical
166	M166	N213A	N320		90	Stealth Face	Beam	Single Angle	FRP	Typical
167	M167	N322	N323			Stealth Column	Column	Pipe	FRP	Typical
168	M168	N241	N292		90	Stealth Face	Beam	Single Angle	FRP	Typical
169	M169	N267	N213B		90	Stealth Face	Beam	Single Angle	FRP	Typical
170	M170	N231	N266		90	Stealth Face	Beam	Single Angle	FRP	Typical
171	M171	N293	N261		90	Stealth Face	Beam	Single Angle	FRP	Typical
172	M172	N284	N323		90	Stealth Face	Beam	Single Angle	FRP	Typical

Member Primary Data (Continued)

	Label	I Joint	J Joint	K Joint	Rotate(deg)	Section/Shape	Type	Design List	Material	Design Rules
173	M173	N374	N317		90	Stealth Face	Beam	Single Angle	FRP	Typical

Hot Rolled Steel Design Parameters

	Label	Shape	Length[ft]	Lbyy[ft]	Lbzz[ft]	Lcomp top[ft]	Lcomp bot[ft]	L-torqu...	Kyy	Kzz	Cb	Function
1	M11	Main Beams	18									Lateral
2	M12	Main Beams	9									Lateral
3	M13	Main Beams	18									Lateral
4	M14	Main Beams	9									Lateral
5	M15	Main Beams	9									Lateral
6	M16	Main Beams	15									Lateral
7	M17	Main Beams	9									Lateral
8	M26	Main Beams	13			Lbyy						Lateral
9	M27	Main Beams	13			Lbyy						Lateral
10	M28	Main Beams	11			Lbyy						Lateral
11	M35	PIPE_4.0	7									Lateral
12	M33A	Main Beams	11			Lbyy						Lateral
13	M34	PIPE_4.0	7									Lateral
14	M35A	PIPE_4.0	7									Lateral
15	M36	Face Memb...	13			Lbyy						Lateral
16	M37	Face Memb...	13			Lbyy						Lateral
17	M42	Mount Pipes	8									Lateral
18	M48	Mount Pipes	8									Lateral
19	M54	Mount Pipes	8									Lateral
20	M60	Mount Pipes	8									Lateral
21	M68	Face Memb...	13			Lbyy						Lateral
22	M69	Face Memb...	13			Lbyy						Lateral
23	M74	Mount Pipes	8									Lateral
24	M80	Mount Pipes	8									Lateral
25	M86	Mount Pipes	8									Lateral
26	M92	Mount Pipes	8									Lateral
27	M100	Face Memb...	13			Lbyy						Lateral
28	M101	Face Memb...	13			Lbyy						Lateral
29	M106	Mount Pipes	8									Lateral
30	M112	Mount Pipes	8									Lateral
31	M118	Mount Pipes	8									Lateral
32	M124	Mount Pipes	8									Lateral
33	M126A	Stealth Colu...	9.333									Lateral
34	M127A	Stealth Colu...	9.333									Lateral
35	M128A	Stealth Colu...	9.333									Lateral
36	M129A	Stealth Colu...	9.333									Lateral
37	M130	Stealth Colu...	9.333									Lateral
38	M131	Stealth Colu...	9.333									Lateral
39	M132	Stealth Colu...	9.333									Lateral
40	M133	Stealth Colu...	13.333									Lateral
41	M134	Stealth Colu...	13.333									Lateral
42	M135	Stealth Colu...	13.333									Lateral
43	M136	Stealth Colu...	13.333									Lateral
44	M137	Stealth Colu...	13.333									Lateral
45	M138	Stealth Colu...	13.333									Lateral
46	M139	Stealth Colu...	9.333									Lateral

Hot Rolled Steel Design Parameters (Continued)

	Label	Shape	Length[ft]	Lbyy[ft]	Lbzz[ft]	Lcomp top[ft]	Lcomp bot[ft]	L-torqu...	Kyy	Kzz	Cb	Function
47	M140	Stealth Colu...	9.333									Lateral
48	M141	Stealth Colu...	9.333									Lateral
49	M142	Stealth Colu...	9.333									Lateral
50	M143	Stealth Colu...	9.333									Lateral
51	M144	Stealth Colu...	9.333									Lateral
52	M145	Stealth Colu...	9.333									Lateral
53	M146	Stealth Colu...	9.333									Lateral
54	M147	Stealth Colu...	13.333									Lateral
55	M148	Stealth Colu...	13.333									Lateral
56	M149	Stealth Colu...	13.333									Lateral
57	M150	Stealth Colu...	13.333									Lateral
58	M151	Stealth Colu...	13.333									Lateral
59	M152	Stealth Colu...	13.333									Lateral
60	M153	Stealth Colu...	13.333									Lateral
61	M154	Stealth Colu...	13.333									Lateral
62	M155	Stealth Face	18			Lbyy						Lateral
63	M156	Stealth Face	18			Lbyy						Lateral
64	M157	Stealth Face	9			Lbyy						Lateral
65	M158	Stealth Face	9			Lbyy						Lateral
66	M159	Stealth Face	18			Lbyy						Lateral
67	M160	Stealth Face	18			Lbyy						Lateral
68	M161	Stealth Face	15			Lbyy						Lateral
69	M162	Stealth Face	9			Lbyy						Lateral
70	M163	Stealth Face	9			Lbyy						Lateral
71	M164	Stealth Face	15			Lbyy						Lateral
72	M165	Stealth Face	3			Lbyy						Lateral
73	M166	Stealth Face	3			Lbyy						Lateral
74	M167	Stealth Colu...	9.333									Lateral
75	M168	Stealth Face	1.273			Lbyy						Lateral
76	M169	Stealth Face	1.273			Lbyy						Lateral
77	M170	Stealth Face	1.273			Lbyy						Lateral
78	M171	Stealth Face	1.273			Lbyy						Lateral
79	M172	Stealth Face	1.273			Lbyy						Lateral
80	M173	Stealth Face	1.345			Lbyy						Lateral

Joint Loads and Enforced Displacements

Joint Label	L,D,M	Direction	Magnitude[(k,k-ft), (in,rad), (k*s^2/f...
No Data to Print ...			

Member Distributed Loads (BLC 12 : BLC 3 Transient Area Loads)

	Member Label	Direction	Start Magnitude[k/ft...	End Magnitude[k/ft,...	Start Location[ft,%]	End Location[ft,%]
1	M5	X	.017	.014	0	1
2	M5	X	.014	.013	1	2
3	M5	X	.013	.01	2	3
4	M5	X	.01	.003	3	4
5	M14	X	.01	.01	0	.501
6	M15	X	.016	.014	0	2.25
7	M15	X	.014	.013	2.25	4.5
8	M15	X	.013	.016	4.5	6.75

Member Distributed Loads (BLC 12 : BLC 3 Transient Area Loads) (Continued)

	Member Label	Direction	Start Magnitude[k/ft,...	End Magnitude[k/ft,...	Start Location[ft,%]	End Location[ft,%]
9	M15	X	.016	.023	6.75	9
10	M22	X	.015	.015	0	.5
11	M147	X	.036	.049	0	2.222
12	M147	X	.049	.048	2.222	4.444
13	M147	X	.048	.046	4.444	6.666
14	M147	X	.046	.054	6.666	8.889
15	M147	X	.054	.054	8.889	11.111
16	M147	X	.054	.05	11.111	13.333
17	M149	X	.071	.063	0	2.222
18	M149	X	.063	.052	2.222	4.444
19	M149	X	.052	.066	4.444	6.666
20	M149	X	.066	.071	6.666	8.889
21	M149	X	.071	.062	8.889	11.111
22	M149	X	.062	.073	11.111	13.333
23	M151	X	.073	.063	0	2.222
24	M151	X	.063	.051	2.222	4.444
25	M151	X	.051	.065	4.444	6.666
26	M151	X	.065	.071	6.666	8.889
27	M151	X	.071	.062	8.889	11.111
28	M151	X	.062	.074	11.111	13.333
29	M153	X	.032	.039	0	2.222
30	M153	X	.039	.042	2.222	4.444
31	M153	X	.042	.046	4.444	6.666
32	M153	X	.046	.054	6.666	8.889
33	M153	X	.054	.054	8.889	11.111
34	M153	X	.054	.05	11.111	13.333
35	M159	X	.01	.019	0	2.7
36	M159	X	.019	.018	2.7	5.4
37	M159	X	.018	.008	5.4	8.1
38	M159	X	.008	.0008248	8.1	10.8
39	M160	X	.012	.035	0	2.16
40	M160	X	.035	.038	2.16	4.32
41	M160	X	.038	.031	4.32	6.48
42	M160	X	.031	.02	6.48	8.64
43	M160	X	.02	.002	8.64	10.8
44	M14	X	.015	.012	0	1.8
45	M14	X	.012	.012	1.8	3.6
46	M14	X	.012	.015	3.6	5.4
47	M14	X	.015	.014	5.4	7.2
48	M14	X	.014	.013	7.2	9
49	M139	X	.016	.043	0	1.867
50	M139	X	.043	.057	1.867	3.733
51	M139	X	.057	.057	3.733	5.6
52	M139	X	.057	.052	5.6	7.466
53	M139	X	.052	.042	7.466	9.333
54	M141	X	.004	.053	.933	2.613
55	M141	X	.053	.086	2.613	4.293
56	M141	X	.086	.088	4.293	5.973
57	M141	X	.088	.073	5.973	7.653
58	M141	X	.073	.043	7.653	9.333
59	M143	X	.004	.053	.933	2.613
60	M143	X	.053	.086	2.613	4.293

Member Distributed Loads (BLC 12 : BLC 3 Transient Area Loads) (Continued)

	Member Label	Direction	Start Magnitude[k/ft,...	End Magnitude[k/ft,...	Start Location[ft,%]	End Location[ft,%]
61	M143	X	.086	.088	4.293	5.973
62	M143	X	.088	.073	5.973	7.653
63	M143	X	.073	.043	7.653	9.333
64	M145	X	.016	.043	0	1.867
65	M145	X	.043	.057	1.867	3.733
66	M145	X	.057	.057	3.733	5.6
67	M145	X	.057	.052	5.6	7.466
68	M145	X	.052	.042	7.466	9.333
69	M159	X	.0009056	.008	7.2	9.9
70	M159	X	.008	.019	9.9	12.6
71	M159	X	.019	.02	12.6	15.3
72	M159	X	.02	.01	15.3	18
73	M160	X	.001	.021	7.2	9.36
74	M160	X	.021	.033	9.36	11.52
75	M160	X	.033	.037	11.52	13.68
76	M160	X	.037	.033	13.68	15.84
77	M160	X	.033	.016	15.84	18

Member Distributed Loads (BLC 13 : BLC 4 Transient Area Loads)

	Member Label	Direction	Start Magnitude[k/ft,...	End Magnitude[k/ft,...	Start Location[ft,%]	End Location[ft,%]
1	M16	Z	.009	.019	0	2.143
2	M16	Z	.019	.024	2.143	4.286
3	M16	Z	.024	.035	4.286	6.429
4	M16	Z	.035	.035	6.429	8.571
5	M16	Z	.035	.024	8.571	10.714
6	M16	Z	.024	.019	10.714	12.857
7	M16	Z	.019	.009	12.857	15
8	M133	Z	.038	.052	0	2.222
9	M133	Z	.052	.051	2.222	4.444
10	M133	Z	.051	.046	4.444	6.666
11	M133	Z	.046	.057	6.666	8.889
12	M133	Z	.057	.06	8.889	11.111
13	M133	Z	.06	.051	11.111	13.333
14	M134	Z	.062	.065	0	2.222
15	M134	Z	.065	.06	2.222	4.444
16	M134	Z	.06	.065	4.444	6.666
17	M134	Z	.065	.075	6.666	8.889
18	M134	Z	.075	.072	8.889	11.111
19	M134	Z	.072	.069	11.111	13.333
20	M135	Z	.068	.052	0	2.222
21	M135	Z	.052	.041	2.222	4.444
22	M135	Z	.041	.056	4.444	6.666
23	M135	Z	.056	.082	6.666	8.889
24	M135	Z	.082	.064	8.889	11.111
25	M135	Z	.064	.011	11.111	13.333
26	M136	Z	.068	.052	0	2.222
27	M136	Z	.052	.041	2.222	4.444
28	M136	Z	.041	.056	4.444	6.666
29	M136	Z	.056	.082	6.666	8.889
30	M136	Z	.082	.064	8.889	11.111
31	M136	Z	.064	.011	11.111	13.333

Member Distributed Loads (BLC 13 : BLC 4 Transient Area Loads) (Continued)

	Member Label	Direction	Start Magnitude[k/ft,...	End Magnitude[k/ft,...	Start Location[ft,%]	End Location[ft,%]
32	M137	Z	.062	.065	0	2.222
33	M137	Z	.065	.059	2.222	4.444
34	M137	Z	.059	.065	4.444	6.666
35	M137	Z	.065	.073	6.666	8.889
36	M137	Z	.073	.071	8.889	11.111
37	M137	Z	.071	.079	11.111	13.333
38	M138	Z	.038	.052	0	2.222
39	M138	Z	.052	.051	2.222	4.444
40	M138	Z	.051	.05	4.444	6.666
41	M138	Z	.05	.057	6.666	8.889
42	M138	Z	.057	.056	8.889	11.111
43	M138	Z	.056	.054	11.111	13.333
44	M161	Z	.01	.039	0	2.143
45	M161	Z	.039	.048	2.143	4.286
46	M161	Z	.048	.064	4.286	6.429
47	M161	Z	.064	.064	6.429	8.571
48	M161	Z	.064	.048	8.571	10.714
49	M161	Z	.048	.039	10.714	12.857
50	M161	Z	.039	.01	12.857	15
51	M164	Z	.017	.015	0	2.5
52	M164	Z	.015	.023	2.5	5
53	M164	Z	.023	.032	5	7.5
54	M164	Z	.032	.023	7.5	10
55	M164	Z	.023	.015	10	12.5
56	M164	Z	.015	.016	12.5	15
57	M13	Z	.014	.011	0	1.8
58	M13	Z	.011	.007	1.8	3.6
59	M165	Z	.019	.023	0	.6
60	M165	Z	.023	.026	.6	1.2
61	M165	Z	.026	.036	1.2	1.8
62	M165	Z	.036	.057	1.8	2.4
63	M165	Z	.057	.08	2.4	3
64	M166	Z	-.004	.019	0	1.5
65	M166	Z	.019	.056	1.5	3
66	M167	Z	.006	.055	0	1.867
67	M167	Z	.055	.086	1.867	3.733
68	M167	Z	.086	.094	3.733	5.6
69	M167	Z	.094	.075	5.6	7.466
70	M167	Z	.075	.037	7.466	9.333

Member Area Loads (BLC 3 : W-NS)

	Joint A	Joint B	Joint C	Joint D	Direction	Distribution	Magnitude[ksf]
1	N236	N15	N14	N215A	X	Two Way	.03
2	N215A	N12	N13	N216A	X	Two Way	.03

Member Area Loads (BLC 4 : W-EW)

	Joint A	Joint B	Joint C	Joint D	Direction	Distribution	Magnitude[ksf]
1	N236	N15	N17	N237	Z	Two Way	.03
2	N10	N213A	N320	N318	Z	Two Way	.03

Load Combinations

	Description	S...	P...	S...	B...	Fa...	B...	Fa...	B...	Fa...	B...	Fa...	B...	Fa...	B...	Fa...	B...	Fa...	B...	Fa...	B...	Fa...	B...	Fa...
1	1.4DL	Yes	Y		1	1.4	2	-1.4	7	-1.4							9	-1.4			11	-1.4		
2	1.2DL+1.0Wo 0deg	Yes	Y		1	1.2	2	-1.2	7	-1.2	3	1	4				9	-1.2			11	-1.2		
3	1.2DL+1.0Wo 30deg	Yes	Y		1	1.2	2	-1.2	7	-1.2	3	.866	4	.5			9	-1.2			11	-1.2		
4	1.2DL+1.0Wo 60deg	Yes	Y		1	1.2	2	-1.2	7	-1.2	3	.5	4	.866			9	-1.2			11	-1.2		
5	1.2DL+1.0Wo 90deg	Yes	Y		1	1.2	2	-1.2	7	-1.2	3		4	1			9	-1.2			11	-1.2		
6	1.2DL+1.0Wo 120deg	Yes	Y		1	1.2	2	-1.2	7	-1.2	3	-.5	4	.866			9	-1.2			11	-1.2		
7	1.2DL+1.0Wo 150deg	Yes	Y		1	1.2	2	-1.2	7	-1.2	3	-.8...	4	.5			9	-1.2			11	-1.2		
8	1.2DL+1.0Wo 180deg	Yes	Y		1	1.2	2	-1.2	7	-1.2	3	-1	4				9	-1.2			11	-1.2		
9	1.2DL+1.0Wo 210deg	Yes	Y		1	1.2	2	-1.2	7	-1.2	3	-.8...	4	-.5			9	-1.2			11	-1.2		
10	1.2DL+1.0Wo 240deg	Yes	Y		1	1.2	2	-1.2	7	-1.2	3	-.5	4	-.8...			9	-1.2			11	-1.2		
11	1.2DL+1.0Wo 270deg	Yes	Y		1	1.2	2	-1.2	7	-1.2	3		4	-1			9	-1.2			11	-1.2		
12	1.2DL+1.0Wo 300deg	Yes	Y		1	1.2	2	-1.2	7	-1.2	3	.5	4	-.8...			9	-1.2			11	-1.2		
13	1.2DL+1.0Wo 330deg	Yes	Y		1	1.2	2	-1.2	7	-1.2	3	.866	4	-.5			9	-1.2			11	-1.2		
14	1.2DL+1.0Wi+1.0DLi 0deg	Yes	Y		1	1.2	2	-1.2	7	-1.2	6	1	5		8	-1	9	-1.2	10	-1	11	-1.2		
15	1.2DL+1.0Wi+1.0DLi 30deg	Yes	Y		1	1.2	2	-1.2	7	-1.2	6	.866	5	.5	8	-1	9	-1.2	10	-1	11	-1.2		
16	1.2DL+1.0Wi+1.0DLi 60deg	Yes	Y		1	1.2	2	-1.2	7	-1.2	6	.5	5	.866	8	-1	9	-1.2	10	-1	11	-1.2		
17	1.2DL+1.0Wi+1.0DLi 90deg	Yes	Y		1	1.2	2	-1.2	7	-1.2	6		5	1	8	-1	9	-1.2	10	-1	11	-1.2		
18	1.2DL+1.0Wi+1.0DLi 120deg	Yes	Y		1	1.2	2	-1.2	7	-1.2	6	-.5	5	.866	8	-1	9	-1.2	10	-1	11	-1.2		
19	1.2DL+1.0Wi+1.0DLi 150deg	Yes	Y		1	1.2	2	-1.2	7	-1.2	6	-.8...	5	.5	8	-1	9	-1.2	10	-1	11	-1.2		
20	1.2DL+1.0Wi+1.0DLi 180deg	Yes	Y		1	1.2	2	-1.2	7	-1.2	6	-1	5		8	-1	9	-1.2	10	-1	11	-1.2		
21	1.2DL+1.0Wi+1.0DLi 210deg	Yes	Y		1	1.2	2	-1.2	7	-1.2	6	-.8...	5	-.5	8	-1	9	-1.2	10	-1	11	-1.2		
22	1.2DL+1.0Wi+1.0DLi 240deg	Yes	Y		1	1.2	2	-1.2	7	-1.2	6	-.5	5	-.8...	8	-1	9	-1.2	10	-1	11	-1.2		
23	1.2DL+1.0Wi+1.0DLi 270deg	Yes	Y		1	1.2	2	-1.2	7	-1.2	6		5	-1	8	-1	9	-1.2	10	-1	11	-1.2		
24	1.2DL+1.0Wi+1.0DLi 300deg	Yes	Y		1	1.2	2	-1.2	7	-1.2	6	.5	5	-.8...	8	-1	9	-1.2	10	-1	11	-1.2		
25	1.2DL+1.0Wi+1.0DLi 330deg	Yes	Y		1	1.2	2	-1.2	7	-1.2	6	.866	5	-.5	8	-1	9	-1.2	10	-1	11	-1.2		

Envelope Joint Reactions

	Joint		X [k]	LC	Y [k]	LC	Z [k]	LC	MX [k-ft]	LC	MY [k-ft]	LC	MZ [k-ft]	LC
1	N3	max	.229	8	.5	8	.243	11	0	25	0	25	0	25
2		min	-.23	2	.128	2	-.251	5	0	1	0	1	0	1
3	N4	max	.351	8	1.134	9	.487	11	0	25	0	25	0	25
4		min	-.351	2	.038	3	-.503	5	0	1	0	1	0	1
5	N7	max	.195	8	.595	6	.165	10	0	25	0	25	0	25
6		min	-.195	2	.074	12	-.155	4	0	1	0	1	0	1
7	N326	max	.229	8	.434	8	.243	11	0	25	0	25	0	25
8		min	-.23	2	.196	2	-.251	5	0	1	0	1	0	1
9	N327	max	.175	8	.528	10	.243	11	0	25	0	25	0	25
10		min	-.175	2	.062	4	-.251	5	0	1	0	1	0	1
11	N328	max	.195	8	.568	6	.164	11	0	25	0	25	0	25
12		min	-.195	2	.104	12	-.153	5	0	1	0	1	0	1
13	N332	max	.229	8	.369	1	.244	11	0	25	0	25	0	25
14		min	-.23	2	.264	13	-.251	5	0	1	0	1	0	1
15	N333	max	.175	8	.492	10	.244	11	0	25	0	25	0	25
16		min	-.175	2	.1	4	-.251	5	0	1	0	1	0	1
17	N334	max	.195	8	.551	5	.164	11	0	25	0	25	0	25
18		min	-.195	2	.122	11	-.153	5	0	1	0	1	0	1
19	N338	max	.229	8	.371	1	.244	11	0	25	0	25	0	25
20		min	-.23	2	.294	10	-.25	5	0	1	0	1	0	1
21	N339	max	.175	8	.478	11	.244	11	0	25	0	25	0	25

Envelope Joint Reactions (Continued)

	Joint		X [k]	LC	Y [k]	LC	Z [k]	LC	MX [k-ft]	LC	MY [k-ft]	LC	MZ [k-ft]	LC
22		min	-.175	2	.117	5	-.25	5	0	1	0	1	0	1
23	N340	max	.195	8	.557	5	.164	11	0	25	0	25	0	25
24		min	-.195	2	.118	11	-.153	5	0	1	0	1	0	1
25	N344	max	.229	8	.401	3	.244	11	0	25	0	25	0	25
26		min	-.23	2	.237	9	-.25	5	0	1	0	1	0	1
27	N345	max	.175	8	.481	12	.244	11	0	25	0	25	0	25
28		min	-.175	2	.115	6	-.25	5	0	1	0	1	0	1
29	N346	max	.195	8	.583	4	.164	11	0	25	0	25	0	25
30		min	-.195	2	.095	10	-.152	5	0	1	0	1	0	1
31	N350	max	.229	8	.468	2	.244	11	0	25	0	25	0	25
32		min	-.23	2	.173	8	-.25	5	0	1	0	1	0	1
33	N351	max	.175	8	.511	12	.244	11	0	25	0	25	0	25
34		min	-.175	2	.088	6	-.25	5	0	1	0	1	0	1
35	N1	max	.229	8	.535	2	.244	11	0	25	0	25	0	25
36		min	-.23	2	.108	8	-.249	5	0	1	0	1	0	1
37	N2	max	.351	8	1.104	13	.488	11	0	25	0	25	0	25
38		min	-.351	2	.096	7	-.498	5	0	1	0	1	0	1
39	N9	max	.195	8	.622	4	.165	12	0	25	0	25	0	25
40		min	-.195	2	.059	10	-.153	6	0	1	0	1	0	1
41	N358	max	.211	8	.522	2	.244	11	0	25	0	25	0	25
42		min	-.212	2	.107	8	-.249	5	0	1	0	1	0	1
43	N359	max	.211	8	.504	9	.243	11	0	25	0	25	0	25
44		min	-.212	2	.11	3	-.251	5	0	1	0	1	0	1
45	N360	max	.178	8	.547	7	.165	10	0	25	0	25	0	25
46		min	-.177	2	.109	13	-.155	4	0	1	0	1	0	1
47	N361	max	.177	8	.555	4	.165	12	0	25	0	25	0	25
48		min	-.177	2	.113	10	-.153	6	0	1	0	1	0	1
49	N366	max	.193	8	.531	13	.244	11	0	25	0	25	0	25
50		min	-.194	2	.083	7	-.249	5	0	1	0	1	0	1
51	N367	max	.193	8	.535	9	.243	11	0	25	0	25	0	25
52		min	-.194	2	.065	3	-.251	5	0	1	0	1	0	1
53	N368	max	.16	8	.512	7	.165	10	0	25	0	25	0	25
54		min	-.158	2	.13	13	-.155	4	0	1	0	1	0	1
55	N369	max	.16	8	.508	3	.165	12	0	25	0	25	0	25
56		min	-.158	2	.146	9	-.153	6	0	1	0	1	0	1
57	N6	max	.142	8	.5	8	.165	10	0	25	0	25	0	25
58		min	-.14	2	.128	2	-.155	4	0	1	0	1	0	1
59	N8	max	.142	8	.468	2	.165	12	0	25	0	25	0	25
60		min	-.14	2	.173	8	-.153	6	0	1	0	1	0	1
61	N205	max	NC		NC		NC		NC		NC		LOCKED	
62		min	NC		NC		NC		NC		NC		LOCKED	
63	N206	max	NC		NC		NC		NC		NC		LOCKED	
64		min	NC		NC		NC		NC		NC		LOCKED	
65	N215	max	NC		NC		NC		NC		NC		LOCKED	
66		min	NC		NC		NC		NC		NC		LOCKED	
67	N216	max	NC		NC		NC		NC		NC		LOCKED	
68		min	NC		NC		NC		NC		NC		LOCKED	
69	N185	max	NC		NC		NC		NC		NC		LOCKED	
70		min	NC		NC		NC		NC		NC		LOCKED	
71	N186	max	NC		NC		NC		NC		NC		LOCKED	
72		min	NC		NC		NC		NC		NC		LOCKED	
73	N144	max	NC		NC		NC		NC		NC		LOCKED	

Envelope Joint Reactions (Continued)

	Joint		X [k]	LC	Y [k]	LC	Z [k]	LC	MX [k-ft]	LC	MY [k-ft]	LC	MZ [k-ft]	LC
74		min	NC		NC		NC		NC		NC		LOCKED	
75	N145	max	NC		NC		NC		NC		NC		LOCKED	
76		min	NC		NC		NC		NC		NC		LOCKED	
77	N154	max	NC		NC		NC		NC		NC		LOCKED	
78		min	NC		NC		NC		NC		NC		LOCKED	
79	N155	max	NC		NC		NC		NC		NC		LOCKED	
80		min	NC		NC		NC		NC		NC		LOCKED	
81	N124	max	NC		NC		NC		NC		NC		LOCKED	
82		min	NC		NC		NC		NC		NC		LOCKED	
83	N125	max	NC		NC		NC		NC		NC		LOCKED	
84		min	NC		NC		NC		NC		NC		LOCKED	
85	Totals:	max	6.12	8	11.78	1	6.84	11						
86		min	-6.12	2	10.097	10	-6.84	5						

Envelope AISC 14th(360-10): LRFD Steel Code Checks

	Member	Shape	Code Check	Loc[ft]	LC	Shear ...	Loc[ft]	Dir	LC	phi*Pnc ...	phi*Pnt ...	phi*Mn ...	phi*Mn ...	Cb	Eqn
1	M16	W10X33	.327	15	11	.148	3.438	z	11	233.066	436.95	52.5	145.5	2...	H1-1b
2	M14	W10X33	.278	0	2	.085	.844	z	2	348.473	436.95	52.5	145.5	2...	H1-1b
3	M15	W10X33	.207	0	2	.069	5.719	z	2	348.473	436.95	52.5	145.5	2...	H1-1b
4	M13	W10X33	.126	0	5	.036	3	y	11	176.758	436.95	52.5	145.5	2...	H1-1b
5	M17	W10X33	.067	0	5	.024	.844	y	5	348.473	436.95	52.5	145.5	2...	H1-1b
6	M11	W10X33	.026	18	12	.021	3	y	2	176.758	436.95	52.5	145.5	2...	H1-1b
7	M101	PIPE 3.0	.025	1.083	1	.005	11.9...		1	26.387	65.205	5.749	5.749	2...	H1-1b
8	M69	PIPE 3.0	.024	11.9...	1	.005	11.9...		1	26.387	65.205	5.749	5.749	2...	H1-1b
9	M86	PIPE 2.0	.023	2	1	.003	2		1	14.916	32.13	1.872	1.872	1...	H1-1b
10	M112	PIPE 2.0	.023	2	1	.003	2		1	14.916	32.13	1.872	1.872	1...	H1-1b
11	M37	PIPE 3.0	.023	11.9...	1	.005	1.083		1	26.387	65.205	5.749	5.749	2...	H1-1b
12	M68	PIPE 3.0	.023	11.9...	1	.005	11.9...		1	26.387	65.205	5.749	5.749	2...	H1-1b
13	M100	PIPE 3.0	.023	1.083	1	.005	11.9...		1	26.387	65.205	5.749	5.749	2...	H1-1b
14	M36	PIPE 3.0	.021	1.083	1	.006	12.0...		1	26.387	65.205	5.749	5.749	2...	H1-1b
15	M48	PIPE 2.0	.020	2	1	.003	2		1	14.916	32.13	1.872	1.872	1...	H1-1b
16	M54	PIPE 2.0	.020	2	1	.003	2		1	14.916	32.13	1.872	1.872	1...	H1-1b
17	M12	W10X33	.020	9	4	.007	8.156	y	4	348.473	436.95	52.5	145.5	2...	H1-1b
18	M27	W10X33	.019	4.063	1	.010	4.063	y	1	272.53	436.95	52.5	145.5	1...	H1-1b
19	M26	W10X33	.019	4.063	1	.010	4.063	y	1	272.53	436.95	52.5	145.5	1...	H1-1b
20	M80	PIPE 2.0	.016	2	1	.002	2		1	14.916	32.13	1.872	1.872	1...	H1-1b
21	M118	PIPE 2.0	.016	5.25	1	.002	2		1	14.916	32.13	1.872	1.872	1...	H1-1b
22	M35A	PIPE 4.0	.016	0	1	.004	2.771		1	79.713	93.24	10.631	10.631	2...	H1-1b
23	M34	PIPE 4.0	.016	0	1	.004	3.063		1	79.713	93.24	10.631	10.631	2...	H1-1b
24	M28	W10X33	.015	5.5	1	.006	0	y	1	311.633	436.95	52.5	145.5	1...	H1-1b
25	M35	PIPE 4.0	.013	5.979	1	.003	3.281		1	79.713	93.24	10.631	10.631	3...	H1-1b
26	M124	PIPE 2.0	.005	2	1	.001	2		1	14.916	32.13	1.872	1.872	1...	H1-1b
27	M74	PIPE 2.0	.005	5.25	1	.001	2		1	14.916	32.13	1.872	1.872	1...	H1-1b
28	M33A	W10X33	.004	5.5	1	.003	0	y	1	311.633	436.95	52.5	145.5	1...	H1-1b
29	M42	PIPE 2.0	.004	5.25	1	.001	2		1	14.916	32.13	1.872	1.872	2...	H1-1b
30	M60	PIPE 2.0	.004	5.25	1	.000	2		1	14.916	32.13	1.872	1.872	2...	H1-1b
31	M92	PIPE 2.0	.004	5.25	1	.001	2		1	14.916	32.13	1.872	1.872	1...	H1-1b
32	M106	PIPE 2.0	.003	5.25	1	.000	2		1	14.916	32.13	1.872	1.872	2...	H1-1b

THE INFORMATION CONTAINED IN THIS SET OF CONSTRUCTION DOCUMENTS IS PROPRIETARY BY NATURE. ANY USE OR DISCLOSURE OTHER THAN THAT WHICH RELATES TO CARRIER SERVICES IS STRICTLY PROHIBITED.

STRUCTURAL NOTES:

SEE S5 FOR DETAILS OF THE ANTENNAS FRAME & SUB-FRAME

STRUCTURAL NOTES:

1. STRUCTURAL CALCULATIONS PREPARED BY JOHN M BANKS ARCHITECT. CONTRACTOR TO VERIFY WITH PROJECT MANAGER TO OBTAIN A COPY.
2. CONTRACTOR TO REFER TO STRUCTURAL CALCULATIONS FOR ADDITIONAL LOADS. NO ERECTION OR MODIFICATION OF BUILDING SHALL BE MADE WITHOUT APPROVAL OF STRUCTURAL ENGINEER.

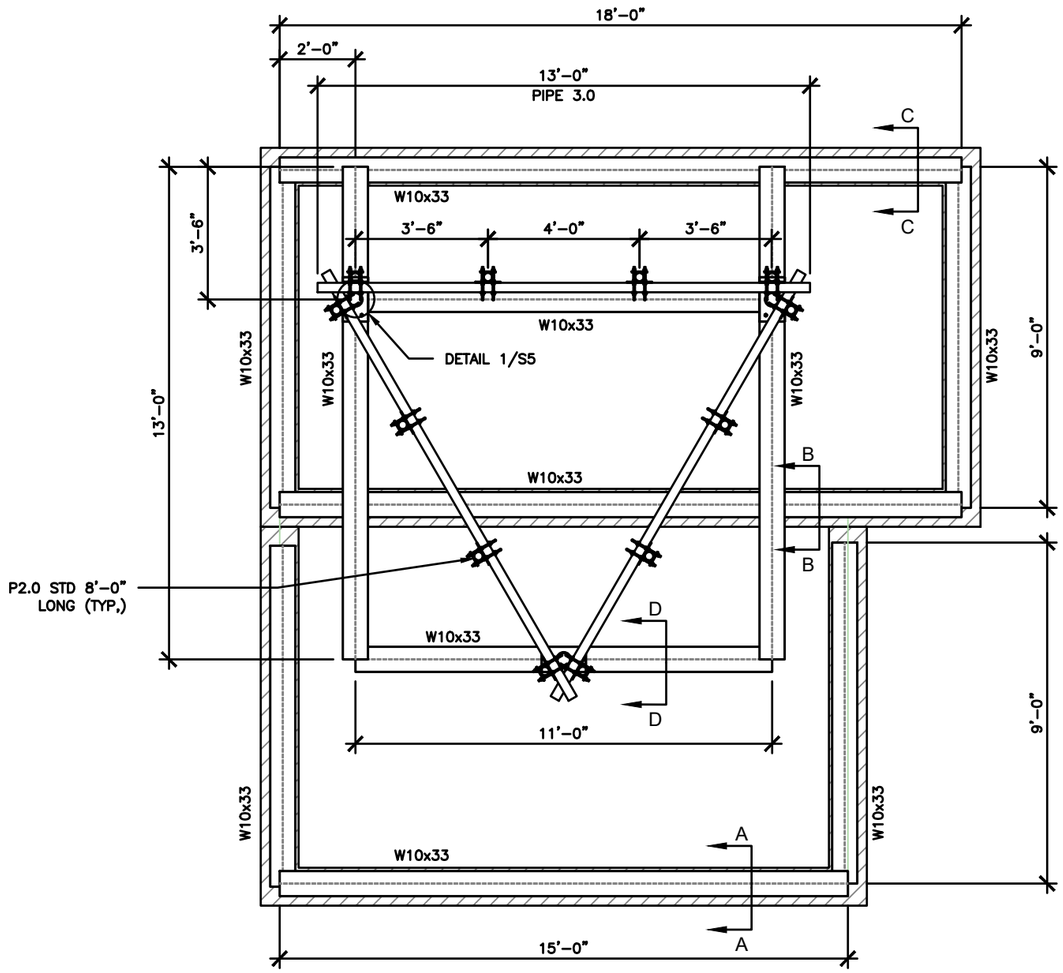

ANTENNAS FRAME & SUB-FRAME PLAN

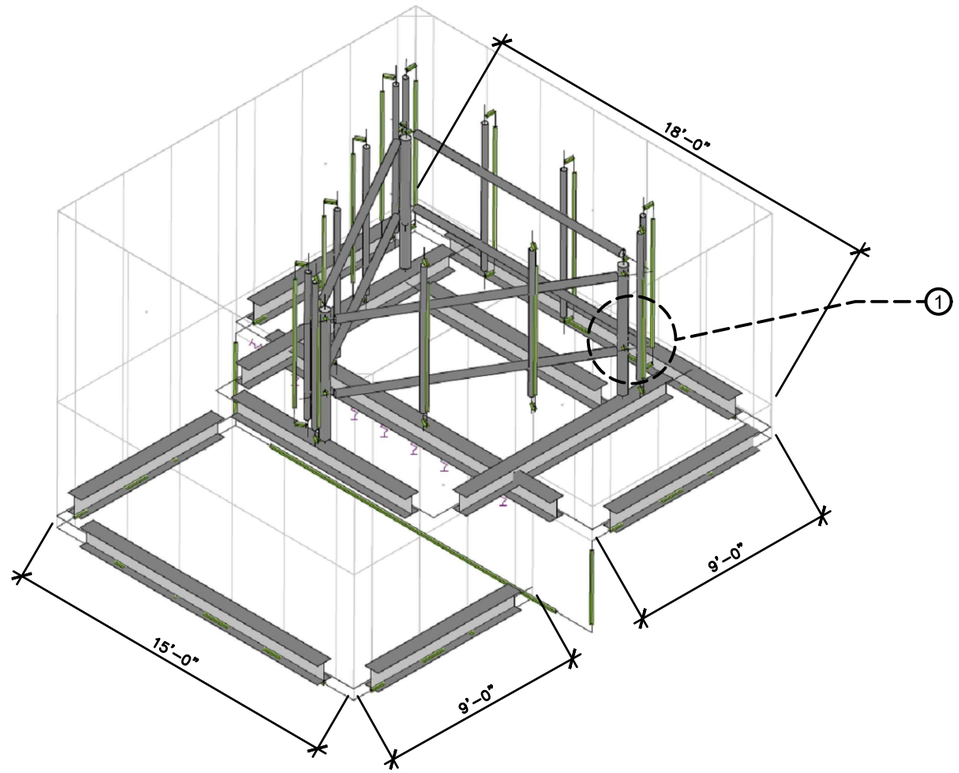

ISOMETRIC VIEW

ANTENNA FRAME STRUCTURAL DETAILS

SCALE N.T.S. | 1

AT&T
930 NATIONAL PARKWAY
SCHAUMBURG, IL 60173

NEXIUS
DANIEL KALINA
SITE ACQUISITION SPECIALIST
PHONE: 630-946-7741
DANIEL.KALINA@NEXIUS.COM

WESTCHESTER SERVICES LLC
604 FOX GLEN
BARRINGTON, IL 60010
PHONE: 847-277-0070
AE@Westchesterservices.com

JOHN M. BANKS ARCHITECT
604 FOX GLEN
BARRINGTON, IL 60010
TELEPHONE: 847-277-0070
FAX : 847-277-0080
jbanks@westchesterservices.com

NSB
15515920/IL4218
ILL04218
525 VILLAGE CENTER DRIVE
BURR RIDGE, IL 60527

REVISIONS

REV.	DATE	DESCRIPTION	INITIALS
0	07/05/22	PERMIT/CONSTRUCTION	CG
A	06/09/22	PRELIMINARY CD	DS

NOT FOR CONSTRUCTION UNLESS LABELED AS CONSTRUCTION SET

JOSEPH A. MEYER 081-002341 LICENSED STRUCTURAL ENGINEER ILLINOIS

"I HEREBY CERTIFY THAT THESE PLANS WERE PREPARED BY ME OR UNDER MY DIRECT SUPERVISION AND THAT I AM A DULY REGISTERED ENGINEER UNDER THE LAWS OF THE STATE OF ILLINOIS"

SHEET TITLE: STRUCTURAL DETAILS

SHEET NUMBER: S4

THE INFORMATION CONTAINED IN THIS SET OF CONSTRUCTION DOCUMENTS IS PROPRIETARY BY NATURE. ANY USE OR DISCLOSURE OTHER THAN THAT WHICH RELATES TO CARRIER SERVICES IS STRICTLY PROHIBITED.

TYP. ALL GRILLAGE BEAMS

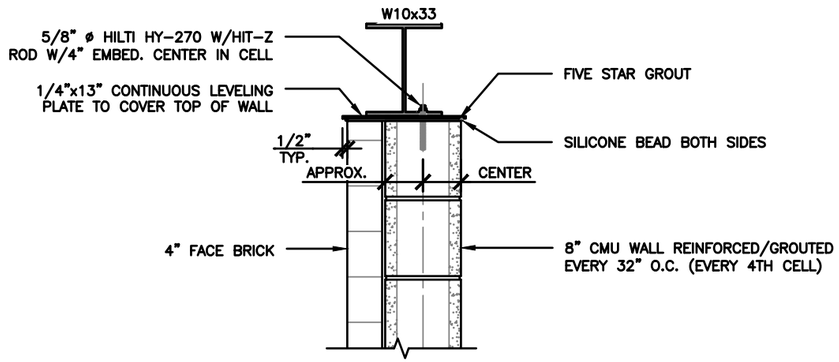

A-A DETAIL

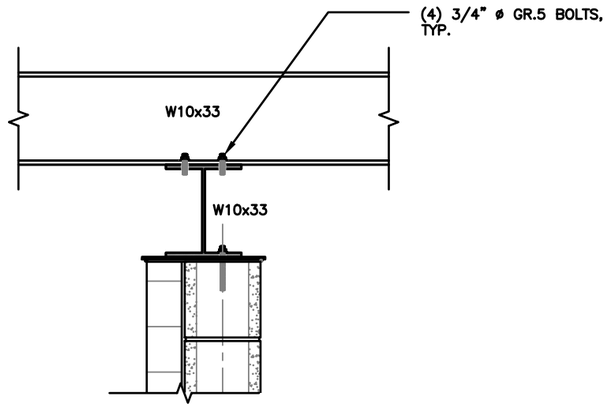

B-B DETAIL

STRUCTURAL NOTES:

1. STRUCTURAL CALCULATIONS PREPARED BY JOHN M BANKS ARCHITECT. CONTRACTOR TO VERIFY WITH PROJECT MANAGER TO OBTAIN A COPY.
2. CONTRACTOR TO REFER TO STRUCTURAL CALCULATIONS FOR ADDITIONAL LOADS. NO ERECTION OR MODIFICATION OF BUILDING SHALL BE MADE WITHOUT APPROVAL OF STRUCTURAL ENGINEER.

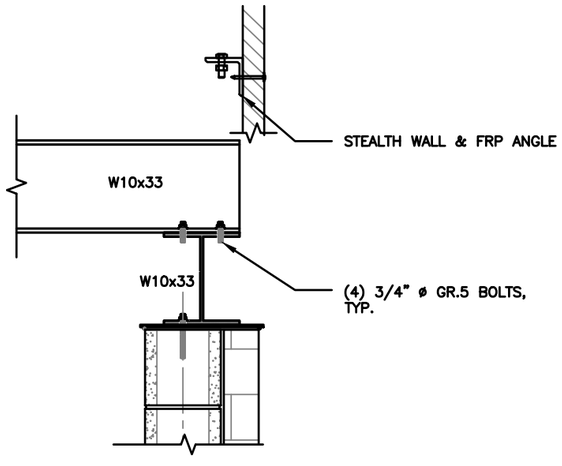

C-C DETAIL

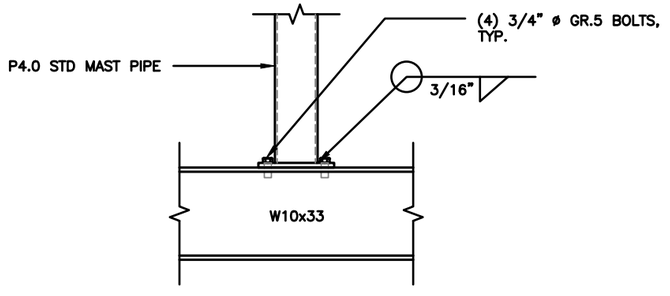

D-D DETAIL

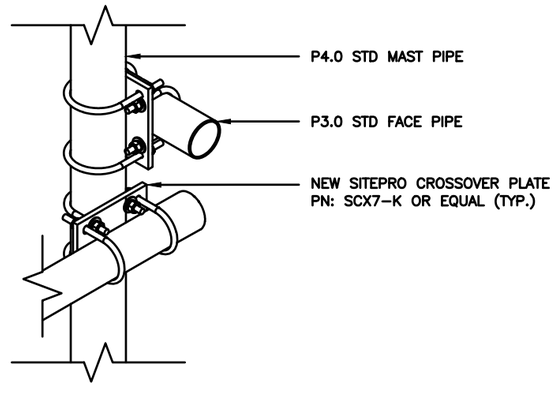

#1 DETAIL

ANTENNA FRAME STRUCTURAL DETAILS

SCALE: N.T.S. | 1

AT&T
930 NATIONAL PARKWAY
SCHAUMBURG, IL 60173

NEXIUS
DANIEL KALINA
SITE ACQUISITION SPECIALIST
PHONE: 630-946-7741
DANIEL.KALINA@NEXIUS.COM

WESTCHESTER SERVICES LLC
604 FOX GLEN
BARRINGTON, IL 60010
PHONE: 847-277-0070
AE@Westchesterservices.com

JOHN M. BANKS ARCHITECT
604 FOX GLEN
BARRINGTON, IL 60010
TELEPHONE: 847-277-0070
FAX : 847-277-0080
jbanks@westchesterservices.com

NSB
15515920/IL4218
ILL04218
525 VILLAGE CENTER DRIVE
BURR RIDGE, IL 60527

REVISIONS			
REV.	DATE	DESCRIPTION	INITIALS
0	07/05/22	PERMIT/CONSTRUCTION	CG
A	06/09/22	PRELIMINARY CD	DS

NOT FOR CONSTRUCTION UNLESS LABELED AS CONSTRUCTION SET

JOSEPH A. MEYER 081-007241 LICENSED STRUCTURAL ENGINEER OF ILLINOIS BARRINGTON, IL

"I HEREBY CERTIFY THAT THESE PLANS WERE PREPARED BY ME OR UNDER MY DIRECT SUPERVISION AND THAT I AM A DULY REGISTERED ENGINEER UNDER THE LAWS OF THE STATE OF ILLINOIS"

SHEET TITLE: STRUCTURAL DETAILS

SHEET NUMBER: S5

STRUCTURAL CALCULATIONS
for
BURR RIDGE (SITE # IL4218)
MRCHI058280
SCREENWALL
at
525 VILLAGE CENTER DRIVE
BURR RIDGE, IL 60527
for
WESTCHESTER SERVICES, LLC
&
RAYCAP (AT22-00921H-35R0)

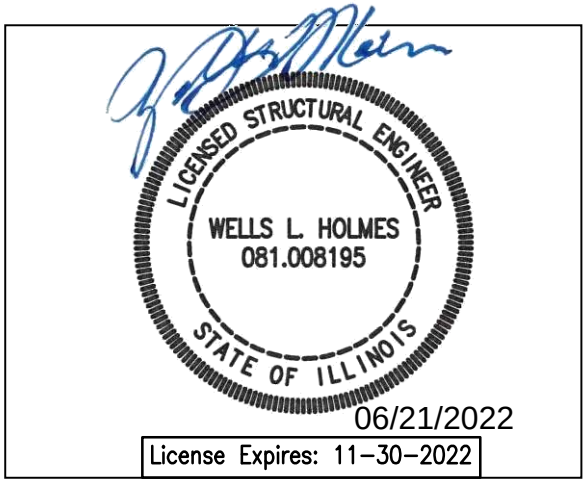

BY: **WELLS HOLMES, S.E.**
PROJECT ENGINEER

IL Firm License #: 184.005810 - COA

PROJECT #: **U0142-1464-221**

DATE: **June 21, 2022**

DESIGNED BY RIS; CHECKED BY TPH

NOTE:
The calculations presented in this package are intended for a single use at the location indicated above, for the client listed above. These calculations shall not be reproduced, reused, "card filed", sold to a third party, or altered in any way without the written authorization of Vector Structural Engineering, LLC and RayCap.

Copyright © 2022 Vector Structural Engineering, LLC
This Excel workbook contains proprietary information belonging to Vector Structural Engineering, LLC, and may be neither wholly nor partially copied or reproduced without the prior written permission of Vector Structural Engineering, LLC.

JOB NO.: U0142-1464-221

Copyright © 2022 Vector Structural Engineering, LLC
This Excel workbook contains proprietary information belonging to Vector Structural Engineering, LLC, and may be neither wholly nor partially copied or reproduced without the prior written permission of Vector Structural Engineering, LLC.

PROJECT: BURR RIDGE

Design Criteria:

Code: Structural design is based on the International Building Code, 2021 Edition and the ASCE 7-16 standard.

Wind: Basic wind speed = 107 mph (3-second gust) per the ASCE 7-16 standard
Risk Category: II
Wind exposure: C

Seismic: Seismic importance factor, I = 1
Risk Category: II
Mapped spectral response accelerations: S_S = 0.129g S_1 = 0.066g
Site class: D
Spectral response coefficients: S_{DS} = 0.138g S_{D1} = 0.106g
Seismic design category: B
Analysis procedure: Equivalent Lateral Force

General Notes:

1 The contractor shall verify dimensions, conditions and elevations before starting work. The engineer shall be notified immediately if any discrepancies are found.
2 The typical notes and details shall apply in all cases unless specifically detailed elsewhere. Where no detail is shown, the construction shall be as shown for other similar work and as required by the building code.
3 These calculations are limited to the structural members shown in these calculations only. The connection of the members shown in these calculations to the existing structure shall be by others, with the exception of those explicitly shown on the drawings.
4 The contractor shall be responsible for compliance with local construction safety orders. Approval of shop drawings by the architect or structural engineer shall not be construed as accepting this responsibility.
5 All structural framing members shall be adequately shored and braced during erection and until full lateral and vertical support is provided by adjoining members.

Structural Steel:

1 All structural steel code checks based on the AISC, 15th Edition per the ASCE 7 standard
2 All steel rectangular tubes (HSS) to be per ASTM A500 GR. B (46 KSI), U.N.O.
3 All other structural steel shapes & plates shall be per ASTM A36, U.N.O.
4 All bolts for steel-to-steel connections shall be per ASTM F3125 GR. A325 U.N.O.
5 All bolted connections shall be tightened per the "turn-of-nut" method as defined by AISC.
6 All welding shall be performed by certified welders in accordance with the latest edition of the American Welding Society (AWS) D1.1
7 All steel surfaces shall be galvanized in accordance with ASTM A123 and ASTM F2329 standards, thoroughly coated with a zinc-rich primer, or otherwise protected as noted on the structural drawings.

JOB NO.: U0142-1464-221

Copyright © 2022 Vector Structural Engineering, LLC
This Excel workbook contains proprietary information belonging to Vector Structural Engineering, LLC, and may be neither wholly nor partially copied or reproduced without the prior written permission of Vector Structural Engineering, LLC.

PROJECT: BURR RIDGE

Fiberglass Reinforced Plastic (FRP):

1 All structural shapes shall be Bedford Reinforced Plastics produced using the pultrusion process.
2 All cut edges and holes shall be sealed with a resin compatible with the resin matrix used in the structural shape.
3 The fabricator and contractor shall exercise precautions necessary to protect the fiberglass pultruded structural shapes from abuse to prevent breakage, nicks, gouges, etc. during fabrication, handling, and installation.
4 Structural shapes shall be fabricated and assembled as indicated on the design drawings.
5 FRP threaded rods and nuts shall be tightened to snug tight and turned an additional 1/2 turn and locked with epoxy.

JOB NO.: U0142-1464-221

Copyright © 2022 Vector Structural Engineering, LLC
This Excel workbook contains proprietary information belonging to Vector Structural Engineering, LLC, and may be neither wholly nor partially copied or reproduced without the prior written permission of Vector Structural Engineering, LLC.

PROJECT: BURR RIDGE

LOADS SUMMARY

Label: Screenwall FRP: Bedford

Dead Load, D:

Component:	Weight							
Stealth® ESSV Panel:	2.00	psf	Area =	909.4	ft^2	Total =	1819	lb
4x4x3/8 FRP Angle:	2.23	plf	Length =	188.35	ft	Total =	420	lb
L4x4x3/8 Steel Angle:	9.80	plf	Length =	32	ft	Total =	317	lb
4x4x3/8 FRP Tube:	4.24	plf	Length =	300	ft	Total =	1272	lb
HSS4-1/2x4-1/2x3/16:	10.70	plf	Length =	86	ft	Total =	920	lb
Misc:	475	lb	Number =	1		Total =	475	lb
						W_p =	5223	lb

Wind Load, W:

p =	31.7	psf	(ASD pressure - see wind calcs)			
Height, h:	14.0	ft				
Max. Horiz. Dim.:	16.1	ft	V_{trans}:	7145	lb	**Controls**
Min. Horiz. Dim.:	9.0	ft	V_{long}:	3994	lb	**Controls**

Seismic Load, E: Consider Seismic: Yes

Architectural Component: Other - enter Rp & ap below from Table 13.5-1

Risk Category:	II	F_a =	1.6	
Seismic Design Category:	B	F_v =	2.4	
I_p =	1.0	S_{MS} =	0.206	
Site Class:	D	S_{M1} =	0.158	
R_p =	2.5	S_{DS} =	0.138	
S_s =	0.129	S_{D1} =	0.106	
S_1 =	0.066			

a_p =	1		0.7 * $F_{p,min}$ =	151	lb
z =	1.0	ft	0.7 * $F_{p,max}$ =	805	lb
h =	1.0	ft			
z/h =	1.0		0.7 * $F_{p,trans}$ =	241	lb
			0.7 * $F_{p,long}$ =	241	lb
			0.7 * $F_{p,vert}$ =	101	lb

JOB NO.: U0142-1464-221

Copyright © 2022 Vector Structural Engineering, LLC
This Excel workbook contains proprietary information belonging to Vector Structural Engineering, LLC, and may be neither wholly nor partially copied or reproduced without the prior written permission of Vector Structural Engineering, LLC.

PROJECT: BURR RIDGE

DESIGN WIND LOADS ON OTHER STRUCTURES:

(Chimneys, Tanks, Rooftop Equipment, & Similar Structures)

Label: Screenwall - Worst Case

INPUT DATA:

Basic Wind Speed, V [mph]:	107
Exposure Category:	C
Elevation Above Sea Level [ft]:	694
Structure:	
Cross-Section:	Square
Height, h [ft]:	14.0
Width, D [ft]:	9.0
Length, L_1 [ft]:	16.1
Average Elevation, z [ft]:	53.0
For Non-Rooftop, Flexible Structures, (if n_1 < 1 Hz):	
Depth, L [ft]:	
Natural Frequency, n_1 [Hz]:	
Damping Ratio, β:	0.005
Rooftop Structure?	No
Supporting Structure (of Rooftop Structure):	
Height, H [ft]:	
Width, B [ft]:	
Length, L_2 [ft]:	
For Flexible Supporting Structures, (if n_1 < 1 Hz):	
Depth, L [ft]:	
Natural Frequency, n_1 [Hz]:	
Damping Ratio, β:	0.005

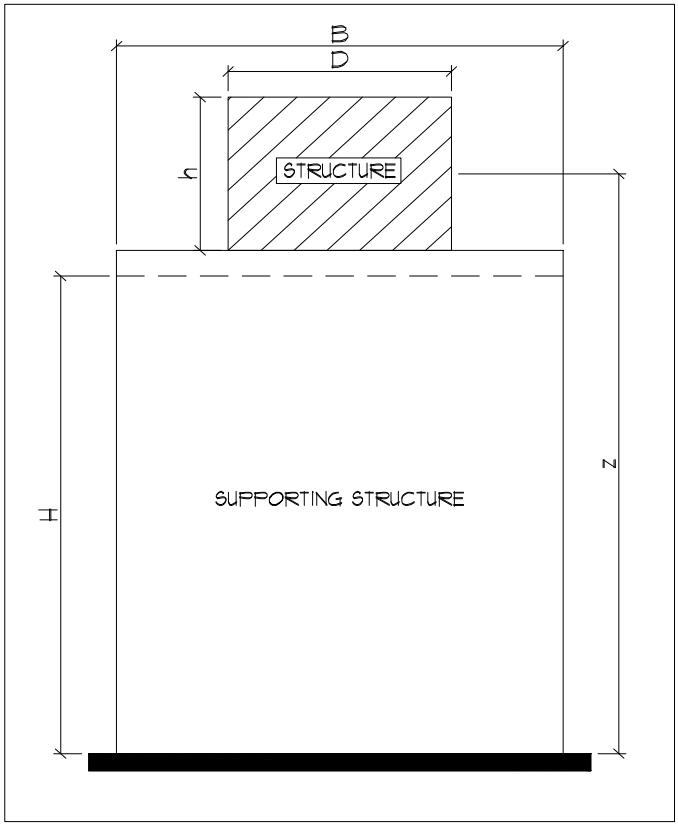

DESIGN SUMMARY:

Full Wind Pressure, 1.0W [psf]:	**31.7**
Design Wind Pressure, 0.6W [psf]:	**19.0**
Design Diagonal Pressure, 0.6W [psf]:	**14.7**

JOB NO.: U0142-1464-221

Copyright © 2022 Vector Structural Engineering, LLC
This Excel workbook contains proprietary information belonging to Vector Structural Engineering, LLC, and may be neither wholly nor partially copied or reproduced without the prior written permission of Vector Structural Engineering, LLC.

PROJECT: BURR RIDGE

ENCLOSURE CALCULATIONS

FRP Cantilevered Column Design:

Label: Col

INPUT:

		Notes:
W_1 [lb]:	399	W = 3' trib width * 14' height * 19.0 psf wind pressure / 2
W_2 [lb]:	399	
h_1 [ft]:	1.0	
h_2 [ft]:	9.5	
Column:	4x4x3/8 Tube	

I [in^4]:	12.04	A_w [in^2]:	2.44
S [in^3]:	6.02	E [psi]:	2,800,000
A [in^2]:	5.44	G [psi]:	450,000

OUTPUT:

Moment, M [lb-ft]:	4,190
Shear, V [lb]:	798

f_b [psi]:	8,351	<	F_b [psi]:	10,000	**OK**
f_v [psi]:	327	<	F_v [psi]:	1,500	**OK**

Select 4x4x3/8 Tube FRP column

See attached FRP material and section properties.

JOB NO.: U0142-1464-221

Copyright © 2022 Vector Structural Engineering, LLC
This Excel workbook contains proprietary information belonging to Vector Structural Engineering, LLC, and may be neither wholly nor partially copied or reproduced without the prior written permission of Vector Structural Engineering, LLC.

PROJECT: BURR RIDGE

FRP Member Design for Bending & Shear:

Label: Girt

Beam assumed to be simply supported.
Note: The force is horizontal.

INPUT:

Notes:

Area Load [psf]:	19.0				
Span, L [ft]:	3.0				
Tributary Width [ft]:	8.5				
Distributed Load, w [plf]:	161.5	I [in^4]:	4.36	A_w [in^2]:	2.86
Beam:	4x4x3/8 Angle	S [in^3]:	1.52	E [psi]:	2,800,000
		A [in^2]:	2.86	G [psi]:	450,000

OUTPUT:

Note: Calculated deflection is based on reduced wind pressure per Table 1604.3. Shear contribution is neglected.

Moment, M [lb-ft]:	182				
Shear, V [lb]:	242				Deflection, Δ =
Deflection, Δ [in]:	0.02	=	L / 2133		5wL^4/(384EI)
Allowable Defl. [in]:	0.30	=	L / 120		**OK**
f_b [psi]:	1,434	<	F_b [psi]:	10,000	**OK**
f_v [psi]:	85	<	F_v [psi]:	1,500	**OK**

Select 4x4x3/8 Angle FRP beam

FRP Shear Connection w/ FRP Bolts:

Label: Girt to Clip Angle

INPUT:

Notes:

Design Force, P [lb]:	242
FRP Bolt Diameter, d_b [in]:	1/2
# Bolts, n_b:	(2)
FRP Web Thickness, t_w [in]:	3/8
Double Shear:	No
Bearing Stress:	Crosswise
Factor of Safety, FS:	4

OUTPUT:

f_{brg} [psi]:	646	<	F_{brg} [psi]:	3,750	**OK**
p_{bolt} [lb]:	121	<	P_{bolt} [lb]:	850	**OK**

Select (2) 1/2" diameter FRP bolts

See attached FRP material and section properties.

VECTOR ENGINEERS

JOB NO.: U0142-1464-221

PROJECT: Burr Ridge **SUBJECT:** CONNECTION ANALYSIS

FOUR-BOLT CONNECTION SUBJECT TO COMBINED LOADING

Description: Col. Baseplate

Geometry

Column Shape:	Rectangular	
Width (in) =	4.5	(parallel to x-axis)
Height (in) =	4.5	(parallel to y-axis)
Socketed?	No	
Bolt spacing 1 (in) =	3	(parallel to x-axis)
Bolt spacing 2 (in) =	7	(parallel to y-axis)
Bolt diameter (in) =	0.625	
Bolt grade:	A325N	
Bolt compression:	Consider	
Tensile strength (lbs):	13806	
Shear strength (lbs):	8283	
Plate width (in) =	5	(parallel to x-axis)
Plate height (in) =	9	(parallel to y-axis)
Thickness (in) =	1.25	
Plate Grade:	A36	
Effective Width:	45° spread plus nut	
	2.50	in
Compression location:	Edge of column	
XX lever arm (in) =	5.75	
YY lever arm (in) =	3.75	
Moment arm (in) =	1.25	

Weld

Type: Fillet

Electrode Class Number (ksi):	70
Directional Strength Increase?	No
Required fillet leg size (in) =	0.222
Actual fillet leg size (in) =	**1/4**

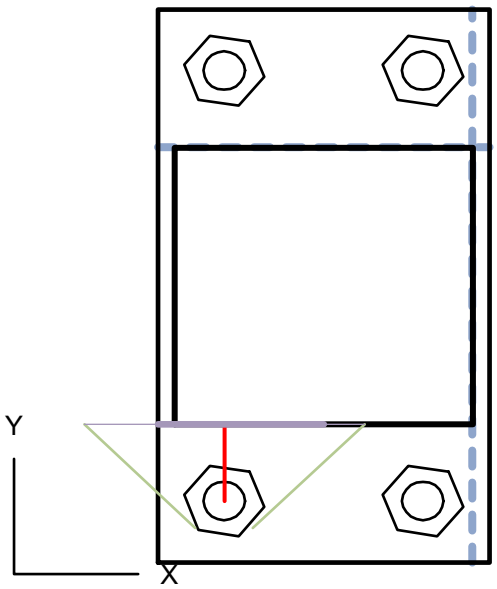

Loads

Load Type:	ASD
$Axial_{(Z)}$ (lb) =	285
$Shear_X$ (lb) =	798
$Shear_Y$ (lb) =	
$Moment_{XX}$ (ft-lb) =	
$Moment_{YY}$ (ft-lb) =	7382
$Torque_{(ZZ)}$ (ft-lb) =	

Results

Worst LC

Maximum Bolt Tension (lbs) =	11882
Maximum Bolt Shear (lbs) =	200
Bolt Stress Ratio:	**86.1%**
Plate Bending Stress Ratio:	**70.6%**
Plate Bearing Stress Ratio:	**0.7%**
Weld stress ratio:	**88.8%**

Nut size across corners (in):	Heavy Hex	1.23
Washer diameter (in):	F436 Standard	1.31
Rect. column corner radius (in):		
Gap size / fit check (in):	0.34	

JOB NO.: U0142-1464-221

Copyright © 2022 Vector Structural Engineering, LLC
This Excel workbook contains proprietary information belonging to Vector Structural Engineering, LLC, and may be neither wholly nor partially copied or reproduced without the prior written permission of Vector Structural Engineering, LLC.

PROJECT: Burr Ridge

DESIGN APPROACH: LRFD

MEMBER IN BENDING Location: Col (Steel Sleeve)

Steel Shape:	HSS4-1/2x4-1/2x3/16		
Moment Capacity:	11800	ft-lbs	(AISC Chapter 3)
Maximum Moment:	7382	ft-lbs	
Check Member:	62.6%		
Result:	**Selected member size is adequate.**		
Note:	Max Moment for 399 lb load at 5' and 13.5'		

VECTOR ENGINEERS

JOB NO.: U0142-1464-221

PROJECT: Burr Ridge **SUBJECT:** WELD GROUP ANALYSIS

WELDED CONNECTION WITH FILLET WELDS TREATED AS LINES

Description: Steel Angle Girt

Geometry

Weld Pattern:	Double weld line, horizontal	
b (in) =	4	(parallel to x-axis)
d (in) =	4	(parallel to y-axis)
S_{XWELD} (in^2) =	16.00	
S_{YWELD} (in^2) =	5.33	
Ip_{WELD} (in^3) =	42.67	
Lweld (in) =	8.00	
Torque arm (in) =	2.83	
Graphic Scale:	100%	

Results

Electrode Class Number (ksi):	70
Required leg size (in) =	0.003
Actual leg size (in) =	**3/16**
Stress ratio:	**1.4%**

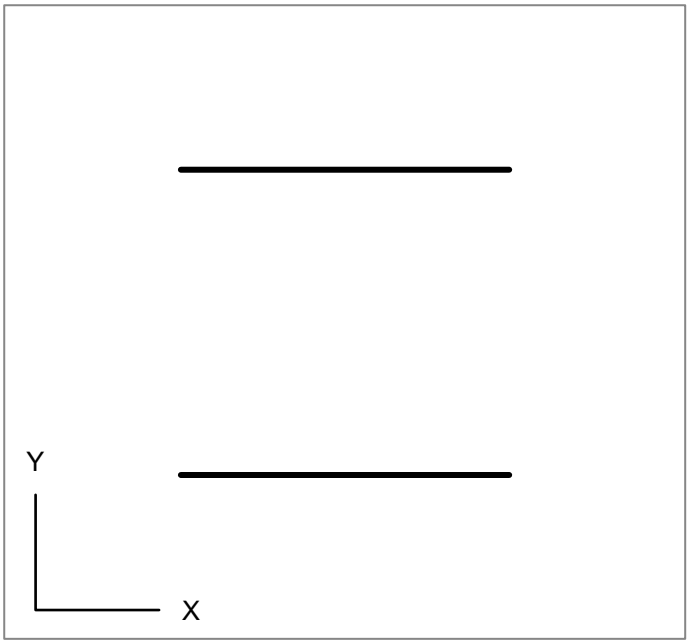

Loads on Weld Group

Load Type:	ASD		
$Axial_{(Z)}$ (lb) =		v_{axial} (lb/in) =	0
$Shear_X$ (lb) =	242	v_{shearx} (lb/in) =	30
$Shear_Y$ (lb) =	189	v_{sheary} (lb/in) =	24
$Moment_{XX}$ (ft-lb) =		$v_{momentxx}$ (lb/in) =	0
$Moment_{YY}$ (ft-lb) =		$v_{momentyy}$ (lb/in) =	0
$Torque_{(ZZ)}$ (ft-lb) =		v_{torque} (lb/in) =	0
		v_{max} (lb/in) =	38

Hazards by Location

Search Information

Address: 525 Village Center Dr, Burr Ridge, IL 60527, USA

Coordinates: 41.7522385, -87.9128277

Elevation: 694 ft

Timestamp: 2022-06-18T20:08:20.147Z

Hazard Type: Wind



ASCE 7-16

MRI 10-Year	74 mph
MRI 25-Year	80 mph
MRI 50-Year	85 mph
MRI 100-Year	92 mph
Risk Category I	100 mph
Risk Category II	107 mph
Risk Category III	114 mph
Risk Category IV	119 mph

ASCE 7-10

MRI 10-Year	76 mph
MRI 25-Year	84 mph
MRI 50-Year	90 mph
MRI 100-Year	96 mph
Risk Category I	105 mph
Risk Category II	115 mph
Risk Category III-IV	120 mph

ASCE 7-05

ASCE 7-05 Wind Speed	90 mph

The results indicated here DO NOT reflect any state or local amendments to the values or any delineation lines made during the building code adoption process. Users should confirm any output obtained from this tool with the local Authority Having Jurisdiction before proceeding with design.

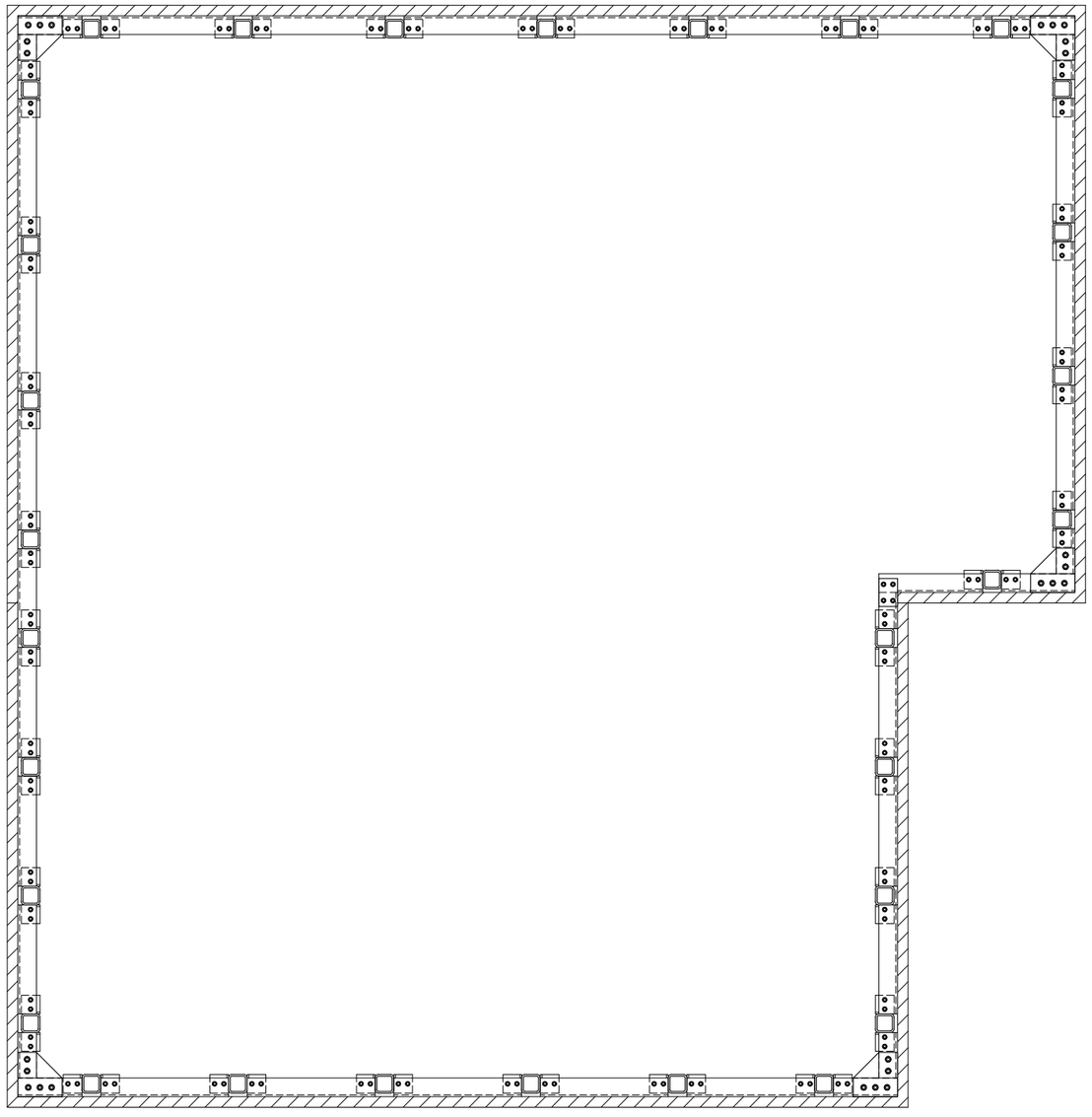

Raycap

7555-A PALMETTO COMMERCE PARKWAY

NORTH CHARLESTON, SC 29420 USA

P: (800)-755-0689 / F: (843)-207-0207

WWW.RAYCAP.COM

PROJECT MANAGER: GEOFF WALKER ; (843)-473-6562

FINAL ENGINEERING

WESTCHESTER SERVICES, LLC
SITE #: IL4218; BURR RIDGE
525 VILLAGE CENTER DRIVE
BURR RIDGE, IL 60527
MRCHI058280

JOB#: AT22-00921H-35R0

DRAWING INDEX

T1	TITLE SHEET
N1-N2	NOTES & SPECIFICATIONS
S1	BUILDING ELEVATION VIEW
S2	PLAN VIEW
S3	SECTION VIEWS & DETAILS
S4	DETAILS

LICENSED STRUCTURAL ENGINEER
WELLS L. HOLMES
081.008195
STATE OF ILLINOIS

06/22/2022

License Expires: 11-30-2022

VECTOR ENGINEERS
651 W. GALENA PARK BLVD., SUITE 101
DRAPER, UT 84020
P: (801) 990-1775 F: (801) 990-1776
VECTOR PROJECT: U0142-1464-221
IL FIRM LICENSE #: 184.005810 - COA

T1

6/21/22

REVISION A

GENERAL

1. THIS PRODUCT IS SOLD PURSUANT TO RAYCAP, INC. TERMS AND CONDITIONS, WHICH ARE INCORPORATED HEREIN BY REFERENCE.
2. THESE SHALL APPLY FOR ALL CASES UNLESS NOTED OTHERWISE (U.N.O.).
3. ANY ITEMS REFERENCED AS BEING ON "HOLD" ARE TO BE INCLUDED IN THE WORK AS SHOWN. HOWEVER, CONSTRUCTION OR FABRICATION IS NOT TO BEGIN UNTIL THE "HOLD" REFERENCE IS REMOVED.
4. IN THE CASE WHERE DIMENSIONS CONTAINED WITHIN ARE LABELED TO BE VERIFIED IN FIELD (V.I.F.), THEY MUST BE FIELD VERIFIED AND/OR CUSTOMER APPROVED PRIOR TO FABRICATION OF MATERIALS.
5. IN THE CASE THAT THE PROPOSED IS TO BE PLACED ON AN EXISTING STRUCTURE, THE MODIFICATIONS DEPICTED IN THESE DRAWINGS ARE INTENDED TO PROVIDE STRUCTURAL SUPPORT FOR THE ADDITION OF THE TELECOM STRUCTURE OUTLINED WITHIN. THE EXISTING STRUCTURE, WHETHER IT BE A FOUNDATION, POLE, OR BUILDING (IF APPLICABLE) SHALL BE ANALYZED AND RETROFITTED AS REQUIRED, BY OTHERS, TO WITHSTAND THE LOADS IMPOSED BY THE NEW RAYCAP STRUCTURE SHOWN ON THE DRAWINGS.
6. TELECOM PRODUCTS SHALL BE INSTALLED BY A CONTRACTOR EXPERIENCED IN SIMILAR WORK. CARE SHALL BE TAKEN IN THE INSTALLATION OF ANY AND ALL MEMBERS IN ACCORDANCE WITH RECOGNIZED INDUSTRY STANDARDS AND PROCEDURES. ALL APPLICABLE OSHA SAFETY GUIDELINES ARE TO BE FOLLOWED. RAYCAP IS NOT PROVIDING FIELD INSTALLATION SUPERVISION.
7. NOTES FOR CONTRACTOR/INSTALLER: ALL BIDS FOR THE INSTALLATION/ERECTION OF THIS PRODUCT SHALL INCLUDE, BUT NOT LIMITED TO THE FOLLOWING MINIMUM REQUIRED TRADES: RIGGING, STEEL ERECTION, STEEL FABRICATION/MODIFICATION, WELDING, ELECTRICAL, CONCRETE, EXCAVATION AND WATERPROOFING. CONTRACTOR MAY, IN CONTRACTOR'S SOLE AND ABSOLUTE DISCRETION, DETERMINE ADDITIONAL TRADES ARE NECESSARY TO INSTALL/ERECT THE PRODUCT.
8. THESE DRAWINGS INDICATE THE MAJOR OPERATIONS TO BE PERFORMED, BUT DO NOT SHOW EVERY FIELD CONDITION THAT MAY BE ENCOUNTERED. THEREFORE, PRIOR TO BEGINNING OF WORK THE CONTRACTOR SHOULD SURVEY THE JOB SITE THOROUGHLY TO MINIMIZE FIELD PROBLEMS.
9. PROTECTION OF EXISTING STRUCTURES DURING THE COURSE OF THE CONSTRUCTION SHALL BE THE RESPONSIBILITY OF THE GENERAL CONTRACTOR.
10. THE STRUCTURAL INTEGRITY OF THIS STRUCTURE IS DESIGNED TO BE ATTAINED IN ITS COMPLETED STATE. WHILE UNDER CONSTRUCTION ANY TEMPORARY BRACING OR SHORING WHICH MAY BE REQUIRED TO MAINTAIN STABILITY PRIOR TO COMPLETION SHALL BE THE RESPONSIBILITY OF THE GENERAL CONTRACTOR.
11. THE PLANS AND DETAILS WITHIN DO NOT INCLUDE DETAILS OR DESIGN FOR DRAINAGE FROM OR WATERPROOFING OF EXTERIOR OR INTERIOR SURFACES OF THE STRUCTURE. THESE DETAILS MUST BE COMPLETED BY OTHERS.
12. CONTRACTOR TO SHIM BASE PLATES AND MATING FLANGES AS REQUIRED TO ENSURE LEVEL SURFACE.

DESIGN NOTES

STRUCTURAL DESIGN IS BASED ON THE INTERNATIONAL BUILDING CODE, 2021 EDITION & THE ASCE 7-16 STANDARD

DESIGN LOADS

WIND:
- BASIC WIND SPEED: 107 MPH (3-SEC GUST) PER ASCE 7-16 STANDARD
- RISK CATEGORY: II
- EXPOSURE: C
- WIND PRESSURE: 19.0 psf (0.6W)

SEISMIC:
- IMPORTANCE FACTOR: 1.00
- RISK CATEGORY: II
- MAPPED SPECTRAL RESPONSE ACCELERATIONS:
  - S_S = 0.129g, S_1 = 0.066g
- SITE CLASS: D
- SPECTRAL RESPONSE COEFFICIENTS:
  - S_{DS} = 0.138g, S_{D1} = 0.106g
- SEISMIC DESIGN CATEGORY: B

DESIGN REACTIONS (ASD)

P_1 = 230 lb
V_1 = 800 lb
M_1 = 4,200 ft-lb

P_2 = 300 lb
V_2 = 800 lb
M_2 = 7,400 ft-lb

A

APPROXIMATE WEIGHT OF SCREENWALLS (EXCLUDING ANTENNA AND MOUNTS): 5.3 k

THE DESIGN REACTIONS ARE TYPICAL AT EACH COLUMN. THE DESIGN REACTIONS 'M' & 'V' ARE CONSIDERED TO ACT IN ANY HORIZONTAL DIRECTION. THE CONNECTION OF THE BASEPLATE TO THE EXISTING STRUCTURE TO BE BY OTHERS FOR THE DESIGN REACTIONS LISTED ABOVE. THE ADEQUACY OF THE EXISTING STRUCTURE TO SUPPORT THE DESIGN REACTIONS TO BE DETERMINED BY OTHERS.

DISCLAIMERS

1. ALL STRUCTURAL COMPONENTS TO BE CONNECTED TOGETHER SHALL BE COMPLETELY FIT UP ON THE GROUND OR OTHERWISE VERIFIED FOR COMPATIBILITY PRIOR TO LIFTING ANY COMPONENT INTO PLACE. REPAIRS REQUIRED DUE TO FIT-UP OR CONNECTION COMPATIBILITY PROBLEMS AFTER PARTIAL ERECTION ARE THE FINANCIAL RESPONSIBILITY OF THE CONTRACTOR.
2. SOME TELECOMMUNICATION STRUCTURES ARE SUSCEPTIBLE TO WIND-INDUCED OSCILLATIONS. OSCILLATIONS MAY OCCUR AT LOW OR MODERATE WIND SPEEDS AND MAY CAUSE STRUCTURAL DAMAGE. TIA PROVIDES NO PRACTICAL ANALYTICAL METHOD TO PREDICT AND PREVENT WIND-INDUCED STRUCTURAL OSCILLATIONS. RAYCAP, INC. RECOMMENDS FREQUENT MONITORING TO IDENTIFY WIND-INDUCED OSCILLATION AND REGULAR CONDITION ASSESSMENTS TO IDENTIFY FATIGUE CRACKING, LOOSE OR MISSING BOLTS, AND ANY OTHER STRUCTURAL DEFECTS. ANY OSCILLATION OR DEFECTS OBSERVED SHALL BE IMMEDIATELY REPORTED TO RAYCAP, INC. FOR FURTHER EVALUATION AND POSSIBLE REPAIRS OR MODIFICATIONS WHICH MAY BE REQUIRED AT THE OWNERS EXPENSE.
3. WHERE EFFECTIVE PROJECTED AREAS (EPA) ARE USED, IT IS THE RESPONSIBILITY OF OTHERS TO VERIFY INSTALLED EQUIPMENT DOES NOT EXCEED LISTED EPA.

STRUCTURAL STEEL AND ALUMINUM

1. STEEL FABRICATION AND INSTALLATION SHALL BE DONE IN ACCORDANCE WITH THE AMERICAN INSTITUTE OF STEEL CONSTRUCTION (AISC) MANUAL AND SPECIFICATIONS.
2. STEEL I-SHAPE, ANGLE, CHANNEL, AND MISCELLANEOUS MEMBERS SHALL CONFORM TO ASTM A36 (36 KSI MIN. YIELD STRENGTH) STEEL SPECIFICATIONS, U.N.O.
3. STEEL PLATE MEMBERS SHALL CONFORM TO MINIMUM ASTM A36 (36 KSI MIN. YIELD STRENGTH) STEEL SPECIFICATIONS U.N.O.
4. STEEL PIPE AND ROUND TUBE MEMBERS SHALL CONFORM TO ASTM A500 GRADE B (42 KSI MIN. YIELD STRENGTH) STEEL SPECIFICATIONS, U.N.O.
5. STEEL RECTANGULAR AND SQUARE TUBE MEMBERS SHALL CONFORM TO ASTM A500 GRADE B (46 KSI MIN. YIELD STRENGTH) STEEL SPECIFICATIONS, U.N.O.
6. STEEL WIDEFLANGE MEMBERS SHALL CONFORM TO ASTM A992 (50 KSI MIN, YIELD STRENGTH) STEEL SPECIFICATIONS U.N.O.
7. STEEL TAPERED POLES SHALL CONFORM TO ASTM A572 GR50 FOR 11 GA AND ASTM A572 GR65 FOR .188" and .25" WALL THICKNESS.
8. ALUMINUM PLATE MEMBERS SHALL BE GRADE 5052-H34. EXCEPTION FOR ⅜" OR THICKER UNBENT MEMBERS TO BE GRADE 6061-T6.
9. ALUMINUM PIPE TO BE GRADE 6061-T6.
10. ALUMINUM TAPERED POLES TO BE GRADE 6063-T6.
11. ALL STRUCTURAL BOLTS SHALL CONFORM TO ASTM F3125 GRADE A325 SPECIFICATIONS, U.N.O. A325N AND A325X ALLOWED. ALL BOLTS ARE RECOMMENDED TO BE ORIENTED WITH THREADS UP AND OUT UNLESS SITE SPECIFIC CONDITIONS WARRANT OTHERWISE.
12. STRUCTURAL BOLTS SHALL BE TIGHTENED PER THE "TURN OF THE NUT" METHOD.
13. STRUCTURAL BOLT HOLE EDGE DISTANCES SHALL BE PER AISC SECTION J3
14. ALL WELDING SHALL BE PERFORMED IN ACCORDANCE WITH THE SPECIFICATIONS AND PROCEDURES OF THE AMERICAN WELDING SOCIETY (AWS) BY CERTIFIED WELDERS PER AWS D1.1 FOR STEEL AND AWS D1.2 FOR ALUMINUM. ALL WELDING SHALL BE PERFORMED IN A SHOP APPROVED BY THE BUILDING OFFICIAL. STEEL WELDS SHALL BE PERFORMED WITH MINIMUM E70XX LOW-HYDROGEN ELECTRODE EXCEPT WHERE HIGHER STRENGTH ELECTRODE IS REQUIRED BY AWS D1.1. ALUMINUM WELDS SHALL UTILIZE 4043 FILLER OR APPROVED ALTERNATIVES. VERIFY FILLER MATERIAL IS COMPATIBLE WITH BASE METAL FOR EACH WELDED JOINT.
15. UNCOATED STEEL SHALL BE HOT DIP GALVANIZED PER ASTM A123 SPECIFICATIONS AFTER FABRICATION OR PAINTED WITH RUST INHIBITIVE PRIMER.
16. STEEL HARDWARE SHALL BE HOT DIP GALVANIZED PER ASTM F2329, U.N.O.
17. AFTER ANY FIELD HOLE PUNCHING / DRILLING OR CUTTING HAS BEEN COMPLETED, OR FOR ANY DAMAGED STRUCTURAL MEMBER, THE GALVANIZING MUST BE REPAIRED ACCORDING TO ASTM A780.
18. ALL WELDED STEEL ASSEMBLIES AND INDIVIDUAL STEEL PARTS SHOULD HAVE THE PART NUMBER WELDED OR TAGGED ONTO THE PART OR ASSEMBLY. IF WELDED, THE PART NUMBERS SHOULD BE LOCATED CONSISTENTLY AND AWAY FROM ANY CONNECTION POINT TO AVOID ANY INTERFERENCE ISSUES WITH THE WELD.
19. DISSIMILAR METALS IN CONTACT SHALL BE INSULATED WITH PAINT OR OTHER APPROVED COATING TO PREVENT GALVANIC CORROSION.

FRP

1. FRP STRUCTURAL SHAPES SHALL BE BEDFORD FRP SERIES 1525, MANUFACTURED USING THE PULTRUSION PROCESS
2. IF PREFABRICATED MEMBERS DO NOT ASSEMBLE PER PLAN, CONTACT RAYCAP, INC. BEFORE CUTTING OR ALTERING FABRICATED MEMBERS.
3. FRP STRUCTURAL MEMBERS SHALL BE FABRICATED AND ASSEMBLED AS INDICATED ON THE DRAWINGS.
4. THE CONTRACTOR SHALL PROTECT THE FRP STRUCTURAL MEMBERS FROM ABUSE TO PREVENT BREAKAGE, NICKS, GOUGES, ETC. DURING FABRICATION, HANDLING, AND INSTALLATION.
5. FRP BOLTS SHOULD BE TIGHTENED 1/2 TURN PAST SNUG AND LOCKED WITH EPOXY.
6. FRP OR STEEL BOLTS THROUGH FRP MEMBERS SHALL MEET THE FOLLOWING SPACING AND EDGE DISTANCE REQUIREMENTS, MEASURED FROM BOLT CENTERS:
   - MIN. BOLT SPACING = 4 TIMES BOLT DIA.
   - MIN. EDGE DIST = 3 TIMES BOLT DIA. IN DIRECTION OF PULTRUSION
   - MIN. EDGE DIST = 2 TIMES BOLT DIA. PERPENDICULAR TO DIRECTION OF PULTRUSION

DESIGN

1. ENGINEERING AND DESIGN CALCULATIONS FOR RAYCAP, INC.® POLE AND TOWER PRODUCTS ARE PREPARED IN ACCORDANCE WITH ADOPTED TIA STANDARDS. OTHER STRUCTURES ARE DESIGNED IN ACCORDANCE WITH APPLICABLE LOCAL OR NATIONAL STANDARDS AND PER CLIENT INPUT.

BALLASTED CONCEALMENTS

1. ROOF MUST BE CLEAN AND FREE OF DEBRIS.
2. THE BALLAST FRAME IS TO BEAR ON A NEOPRENE PAD PROVIDED BY OTHERS. PLACED BETWEEN THE NEW BALLAST FRAME AND ROOF.
3. DESIGN ASSUMES CONTRACTOR IS RESPONSIBLE FOR LEVELING THE PLATFORM ON UNEVEN ROOF AND PROVIDING APPROPRIATE SHIM METHOD IF ROOF IS SLOPED.

STEALTHSKIN PANELS

1. FASTENER HOLES IN STEALTHSKIN FOAM COMPOSITE PANELS ARE NOT FACTORY DRILLED AND MUST BE DRILLED IN THE FIELD.
2. PANEL FASTENERS TO BE SPACED 12" O.C. MAX. AND LOCATED 6" MAX. HORIZONTALLY FROM EACH EDGE AT TOP AND BOTTOM OF PANEL, UNLESS NOTED OTHERWISE. MAINTAIN 1 ½" MIN. EDGE DISTANCE FROM ALL EDGES. 4' WIDE PANELS REQUIRE (4) FASTENERS TOP AND BOTTOM. 5' WIDE PANELS REQUIRE (5) FASTENERS TOP AND BOTTOM.
3. WHEN FASTENER BOLT HEAD OR NUT BEARS DIRECTLY ON SURFACE OF STEALTHSKIN PANEL, TIGHTEN PANEL BOLTS ONLY ½ TURN PAST SNUG. APPLY THREAD LOCK COMPOUND TO THE THREADS OF METAL BOLTS. USE THIN BEAD OF EPOXY TO LOCK THE NUTS OF FRP BOLTS AND STEALTH} STAINLESS STEEL PANEL BOLTS. USE WASHER OR FLANGED HEAD BOLT, OR FASTENER WITH LARGE BEARING SURFACE.
4. PANELS WILL EXPAND AND CONTRACT DUE TO TEMPERATURE. WHEN INSTALLING PANELS IN COLD TEMPERATURES, EVENLY SPACE PANELS ALONG LENGTH OF SCREEN WALL WITH EQUAL GAPS BETWEEN PANELS TO ALLOW FOR EXPANSION DURING WARM TEMPERATURES.
5. ADJACENT FLAT PANELS ARE JOINED BY A VERTICAL FOAM SPLINE THAT IS INSERTED INTO GROOVES CUT INTO THE SIDE OF EACH PANEL. DO NOT LIFT PANELS BY GROOVES. PANELS MUST BE LIFTED WITH FORCE DIRECTED ONTO PANEL SURFACE.
6. ADJACENT RADIUS PANELS ARE JOINED BY A VERTICAL H-CHANNEL. INSERT PANELS INTO EACH SIDE OF H-CHANNEL.
7. RADIUS PANELS MUST BE EVENLY SPACED ALONG RADIUS SUPPORT. CONTRACTOR TO MEASURE LENGTH OF RADIUS SUPPORT AND DIVIDE BY THE NUMBER OF RADIUS PANELS TO DETERMINE PROPER SPACING. H-CHANNEL CONNECTORS ARE USED TO COVER THE GAP BETWEEN PANELS AND TO ALLOW FOR PANEL EXPANSION AND CONTRACTION.
8. SURFACES OF PANELS SHALL BE COATED WITH SUITABLE PAINT FOR UV PROTECTION. TOP EDGE OF PANEL MUST BE COVERED TO PREVENT WATER TRAVEL BETWEEN PANELS. USE SHERWIN WILLIAMS "COROTHANE II" OR PRE APPROVED EQUIVALENT.
9. EXPOSED TOP AND SIDE FOAM EDGES OF PANELS MUST BE COVERED OR COATED FOR UV PROTECTION. RAYCAP, INC. WILL PROVIDE PANEL EDGE CAPS (VERTICAL AND HORIZONTAL) TO BE FIELD APPLIED FOR THIS PURPOSE FOR MOST APPLICATIONS. HORIZONTAL AND VERTICAL PANEL EDGE CAPS TO BE SECURED TO THE EXPOSED EDGES OF THE PANELS WITH PROVIDED TEK SCREWS INSTALLED @ 12" MAXIMUM SPACING ON THE INSIDE FACE OF THE PANEL. IN RF SENSITIVE LOCATIONS,CONTRACTOR WILL APPLY (2) BEADS OF ADHESIVE TO EACH INSIDE CORNER OF THE EDGE CAP AND SECURE CAP TO PANEL WITH TAPE WHILE ADHESIVE CURES.
10. AT CORNER APPLICATIONS, VERTICAL PANEL EDGE CAPS ARE TO BE USED TO CAP BOTH EXPOSED EDGES (1 PER CUT EDGE OF PANELS). THESE EDGE CAPS ARE TO BE CUT 1" SHORTER THAN THE PANEL AND LEAVE 1" GAP AT THE TOP TO ALLOW ROOM FOR THE THE HORIZONTAL PANEL EDGE CAP AT THE TOP. CONTRACTOR TO APPLY (2) BEADS OF ADHESIVE TO EACH EDGE CAP (INSIDE CORNERS OF CAP), AND SECURE WITH TAPE AND/OR PROVIDED SCREWS (16 TOTAL PER CORNER) WHILE THE ADHESIVE CURES. IF CORNERS ARE IN NON-RF AREAS, EDGE CAP SCREWS CAN BE LEFT IN PLACE.
11. AT CORNER APPLICATIONS WITH SSV PANEL ONLY, CORNER CHANNELS ARE TO BE USED TO JOIN PANELS TOGETHER. BOTH ADJOINING PANELS WILL BE INSERTED INTO THE CORNER CHANNEL AND SECURED USING PROVIDED NYLON PUSHPINS. THE PUSHPINS ARE TO BE PLACED ON THE INSIDE OF ONE OF THE PANELS ONLY @ 12" MAXIMUM SPACING.

SPECIAL INSPECTIONS & STRUCTURAL OBSERVATION

1. STEEL FABRICATION SHALL BE DONE ON THE PREMISES OF A FABRICATOR REGISTERED AND APPROVED AS REQUIRED BY THE BUILDING CODE TO PERFORM SUCH WORK WITHOUT SPECIAL INSPECTION. ALTERNATIVELY, SPECIAL INSPECTION OF MATERIALS, WELDING, AND FABRICATION PROCEDURES SHALL BE REQUIRED FOR FABRICATION BY AN UNAPPROVED FABRICATOR.
2. NO FIELD WELDING SHALL BE PERMITTED.
3. THE FOLLOWING SPECIAL INSPECTIONS (WHERE APPLICABLE) SHALL BE REQUIRED PER CHAPTER 17 OF THE BUILDING CODE.
   - SPECIAL INSPECTION OF HIGH-STRENGTH BOLTING (WHEN APPLICABLE):
     - PERIODIC SPECIAL INSPECTION IF BOLTS ARE PRETENSIONED WITH MATCH-MARKING TECHNIQUES.
     - CONTINUOUS SPECIAL INSPECTION OF ALL OTHER HIGH-STRENGTH BOLTING.
4. SPECIAL INSPECTION IS NOT REQUIRED FOR WORK OF A MINOR NATURE OR AS WARRANTED BY CONDITIONS IN THE JURISDICTION AS APPROVED BY THE BUILDING OFFICIAL. THUS, SPECIAL INSPECTION ITEMS ABOVE MAY BE WAIVED AS DEEMED APPROPRIATE BY THE BUILDING OFFICIAL.
5. NO STRUCTURAL OBSERVATION IS REQUIRED.

LICENSED STRUCTURAL ENGINEER
WELLS L. HOLMES
081.008195
STATE OF ILLINOIS
06/22/2022
License Expires: 11–30–2022

VECTOR ENGINEERS
651 W. GALENA PARK BLVD., SUITE 101
DRAPER, UT 84020
P: (801) 990-1775 F: (801) 990-1776
VECTOR PROJECT: U0142-1464-221
IL FIRM LICENSE #: 184.005810 - COA

DRAWN	RIS-VSE
DESIGNED	RIS-VSE
REVISED	

DRAWING NOT TO SCALE.
ALL DIMENSIONS ARE IN INCHES UNLESS OTHERWISE SPECIFIED

TOLERANCES:
DECIMAL: .X ± 0.1, .XX ±0.03, .XXX ±0.01, ANGLES ±.5°
FRACTIONAL: X/X ± 1/16

ALL BENDING TOLERANCES: ± 1.0°

THIRD ANGLE PROJECTION

Raycap
7555-A PALMETTO COMMERCE PARKWAY NORTH
CHARLESTON, SC 29420 USA

WESTCHESTER SERVICES, LLC
SITE #: IL4218; BURR RIDGE
525 VILLAGE CENTER DRIVE
BURR RIDGE, IL 60527

NOTES & SPECIFICATIONS

SHEET #	REVISION
N1	A

JOB#: AT22-00921H-35R0
DATE: 6/21/22

PROPRIETARY INFORMATION: THE INFORMATION CONTAINED WITHIN THIS DRAWING SET IS PROPRIETARY & CONFIDENTIAL BY NATURE. ANY USE OR DISCLOSURE OTHER THAN THAT WHICH RELATES TO RAYCAP, INC. IS STRICTLY PROHIBITED.
COPYRIGHT 2022 RAYCAP INC. ALL RIGHTS RESERVED

REVISION TABLE			
REVISION	DESIGNER	DATE	SCOPE OF REVISION
0	RIS-VSE	06/20/22	FINAL ENGINEERING
A	RIS-VSE	06/21/22	REVISED FINAL ENGINEERING

VECTOR ENGINEERS
651 W. GALENA PARK BLVD., SUITE 101
DRAPER, UT 84020
P: (801) 990-1775 F: (801) 990-1776
VECTOR PROJECT: U0142-1464-221
IL FIRM LICENSE #: 184.005810 - COA

DRAWN	RIS-VSE
DESIGNED	RIS-VSE
REVISED	

DRAWING NOT TO SCALE.
ALL DIMENSIONS ARE IN INCHES
UNLESS OTHERWISE SPECIFIED

TOLERANCES:
DECIMAL: FRACTIONAL:
.X ± 0.1 X/X ± 1/16
.XX ±0.03
.XXX ±0.01
ANGLES ±.5°

ALL BENDING TOLERANCES:
± 1.0°

THIRD ANGLE PROJECTION

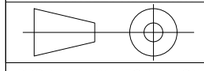

Raycap
7555-A PALMETTO COMMERCE PARKWAY NORTH
CHARLESTON, SC 29420 USA

WESTCHESTER SERVICES, LLC
SITE #: IL4218; BURR RIDGE
525 VILLAGE CENTER DRIVE
BURR RIDGE, IL 60527

NOTES & SPECIFICATIONS

SHEET #	REVISION
N2	A

JOB#: AT22-00921H-35R0

DATE: 6/21/22

PROPRIETARY INFORMATION: THE INFORMATION CONTAINED WITHIN THIS DRAWING SET IS PROPRIETARY & CONFIDENTIAL BY NATURE. ANY USE OR DISCLOSURE OTHER THAN THAT WHICH RELATES TO RAYCAP, INC. IS STRICTLY PROHIBITED.
COPYRIGHT 2022 RAYCAP INC. ALL RIGHTS RESERVED

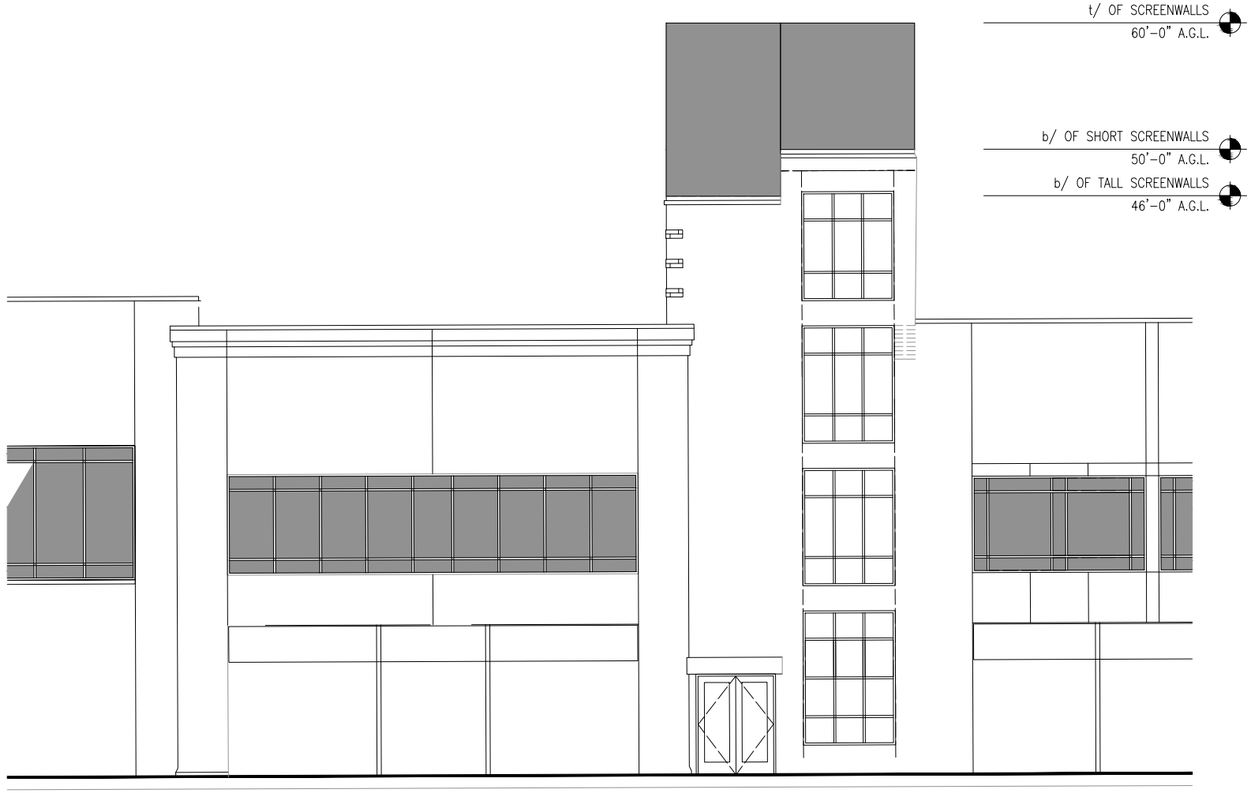

ELEVATION VIEW
N.T.S.
1

LICENSED STRUCTURAL ENGINEER
WELLS L. HOLMES
081.008195
STATE OF ILLINOIS

06/22/2022

License Expires: 11-30-2022

VECTOR ENGINEERS
651 W. GALENA PARK BLVD., SUITE 101
DRAPER, UT 84020
P: (801) 990-1775 F: (801) 990-1776
VECTOR PROJECT: U0142-1464-221
IL FIRM LICENSE #: 184.005810 - COA

DRAWN	RIS-VSE
DESIGNED	RIS-VSE
REVISED	

DRAWING NOT TO SCALE.
ALL DIMENSIONS ARE IN INCHES
UNLESS OTHERWISE SPECIFIED

TOLERANCES:
DECIMAL: FRACTIONAL:
.X ± 0.1 X/X ± 1/16
.XX ±0.03
.XXX ±0.01
ANGLES ±.5°

ALL BENDING TOLERANCES:
± 1.0°

THIRD ANGLE PROJECTION

Raycap
7555-A PALMETTO COMMERCE PARKWAY NORTH
CHARLESTON, SC 29420 USA

WESTCHESTER SERVICES, LLC
SITE #: IL4218; BURR RIDGE
525 VILLAGE CENTER DRIVE
BURR RIDGE, IL 60527

BUILDING ELEVATION VIEW

SHEET #	REVISION
S1	A

JOB#: AT22-00921H-35R0
DATE: 6/21/22

PROPRIETARY INFORMATION: THE INFORMATION CONTAINED WITHIN THIS DRAWING SET IS PROPRIETARY & CONFIDENTIAL BY NATURE. ANY USE OR DISCLOSURE OTHER THAN THAT WHICH RELATES TO RAYCAP, INC. IS STRICTLY PROHIBITED.
COPYRIGHT 2022 RAYCAP INC. ALL RIGHTS RESERVED

NOTES:
1. ANTENNA & MOUNT BY OTHERS, NOT SHOWN FOR CLARITY.

A

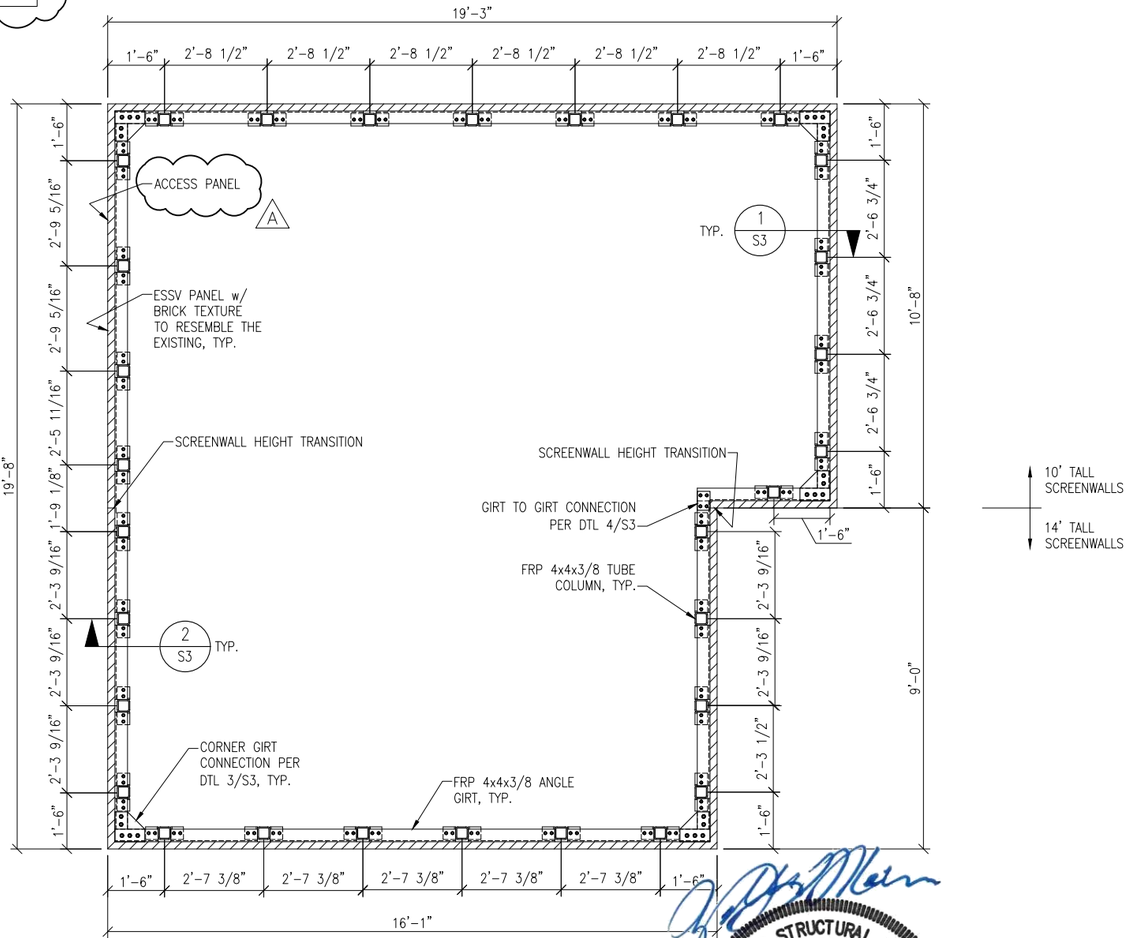

10' TALL SCREENWALLS

14' TALL SCREENWALLS

ELEVATION VIEW
N.T.S.
1

LICENSED STRUCTURAL ENGINEER
WELLS L. HOLMES
081.008195
STATE OF ILLINOIS
06/22/2022
License Expires: 11-30-2022

VECTOR ENGINEERS
651 W. GALENA PARK BLVD., SUITE 101
DRAPER, UT 84020
P: (801) 990-1775 F: (801) 990-1776
VECTOR PROJECT: U0142-1464-221
IL FIRM LICENSE #: 184.005810 - COA

DRAWN	RIS-VSE
DESIGNED	RIS-VSE
REVISED	

DRAWING NOT TO SCALE.
ALL DIMENSIONS ARE IN INCHES UNLESS OTHERWISE SPECIFIED

TOLERANCES:
DECIMAL: .X ±0.1, .XX ±0.03, .XXX ±0.01, ANGLES ±.5°
FRACTIONAL: X/X ± 1/16

ALL BENDING TOLERANCES: ± 1.0°

THIRD ANGLE PROJECTION

Raycap
7555-A PALMETTO COMMERCE PARKWAY NORTH
CHARLESTON, SC 29420 USA

WESTCHESTER SERVICES, LLC
SITE #: IL4218; BURR RIDGE
525 VILLAGE CENTER DRIVE
BURR RIDGE, IL 60527

PLAN VIEW

SHEET #	REVISION
S2	A

JOB#: AT22-00921H-35R0
DATE: 6/21/22

PROPRIETARY INFORMATION: THE INFORMATION CONTAINED WITHIN THIS DRAWING SET IS PROPRIETARY & CONFIDENTIAL BY NATURE. ANY USE OR DISCLOSURE OTHER THAN THAT WHICH RELATES TO RAYCAP, INC. IS STRICTLY PROHIBITED.
COPYRIGHT 2022 RAYCAP INC. ALL RIGHTS RESERVED

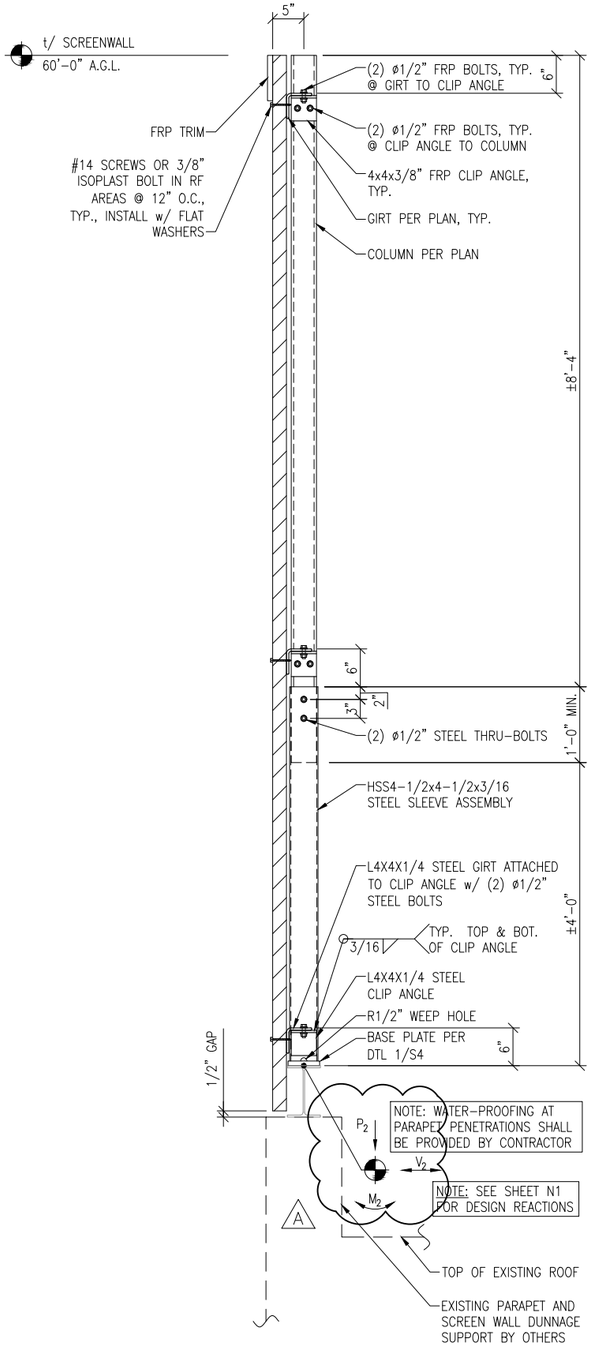

A

14' SCREENWALL SECTION

N.T.S.

2

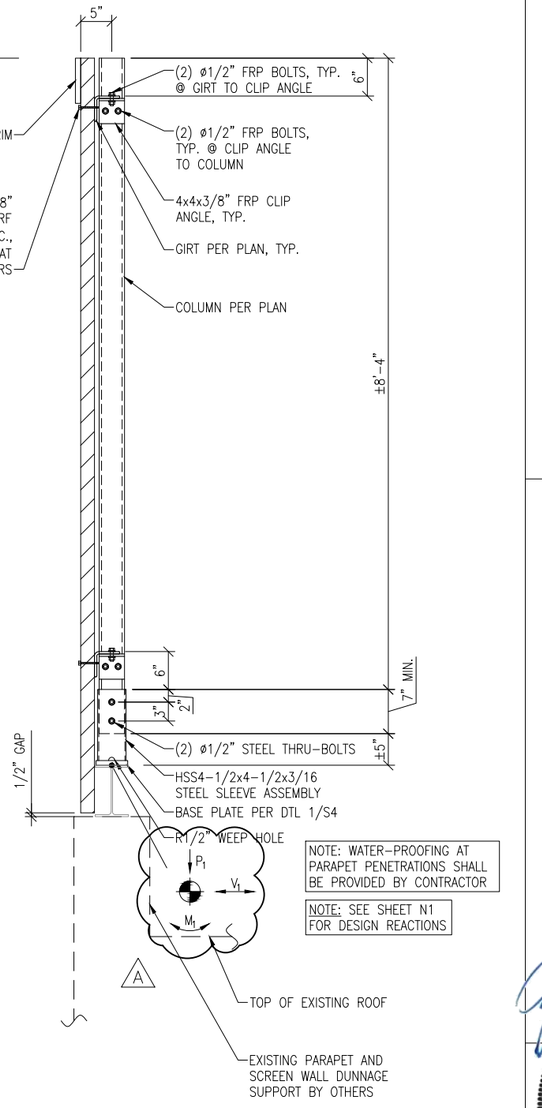

A

10' SCREENWALL SECTION

N.T.S.

1

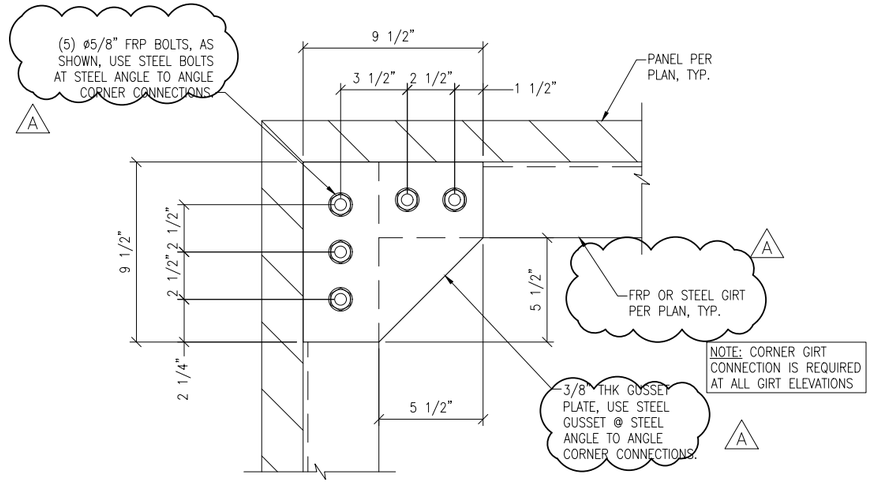

GIRT CORNER CONNECTION

N.T.S.

3

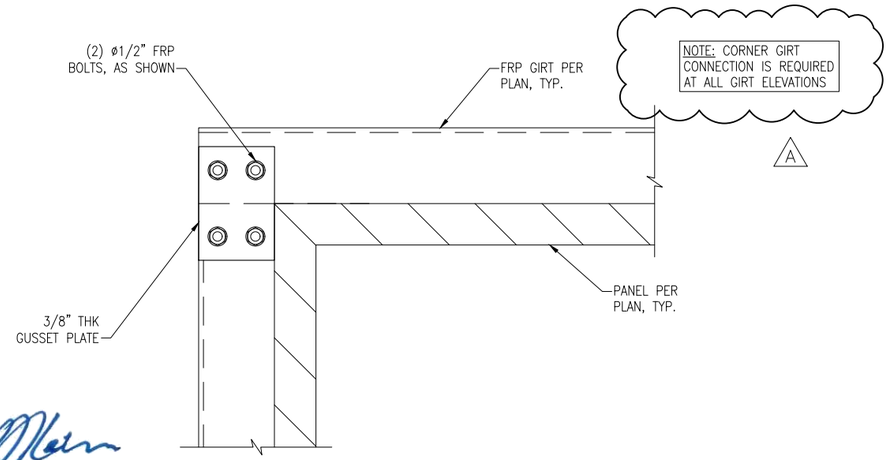

GIRT TO GIRT CONNECTION

N.T.S.

4

LICENSED STRUCTURAL ENGINEER
WELLS L. HOLMES
081.008195
STATE OF ILLINOIS

06/22/2022

License Expires: 11-30-2022

VECTOR ENGINEERS
651 W. GALENA PARK BLVD., SUITE 101
DRAPER, UT 84020
P: (801) 990-1775 F: (801) 990-1776
VECTOR PROJECT: U0142-1464-221
IL FIRM LICENSE #: 184.005810 - COA

DRAWN	RIS-VSE
DESIGNED	RIS-VSE
REVISED	

DRAWING NOT TO SCALE.
ALL DIMENSIONS ARE IN INCHES UNLESS OTHERWISE SPECIFIED

TOLERANCES:
DECIMAL: FRACTIONAL:
.X ±0.1 X/X ±1/16
.XX ±0.03
.XXX ±0.01
ANGLES ±.5°

ALL BENDING TOLERANCES: ± 1.0°

THIRD ANGLE PROJECTION

Raycap
7555-A PALMETTO COMMERCE PARKWAY NORTH
CHARLESTON, SC 29420 USA

WESTCHESTER SERVICES, LLC
SITE #: IL4218; BURR RIDGE
525 VILLAGE CENTER DRIVE
BURR RIDGE, IL 60527

SECTION VIEWS & DETAILS

SHEET #	REVISION
S3	A

JOB#: AT22-00921H-35R0 DATE: 6/21/22

PROPRIETARY INFORMATION: THE INFORMATION CONTAINED WITHIN THIS DRAWING SET IS PROPRIETARY & CONFIDENTIAL BY NATURE. ANY USE OR DISCLOSURE OTHER THAN THAT WHICH RELATES TO RAYCAP, INC. IS STRICTLY PROHIBITED.
COPYRIGHT 2022 RAYCAP INC. ALL RIGHTS RESERVED

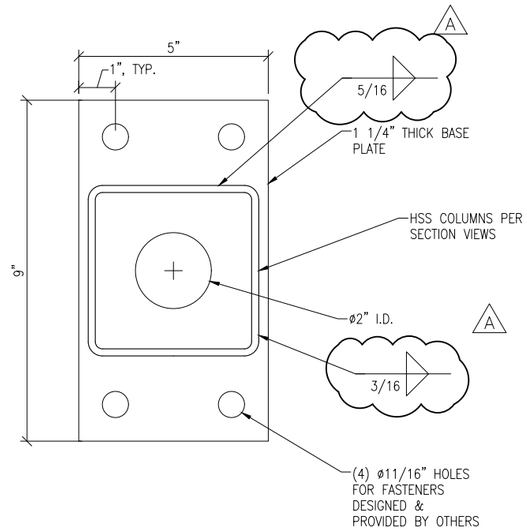

COLUMN BASE ASSEMBLY

N.T.S.

1

LICENSED STRUCTURAL ENGINEER
WELLS L. HOLMES
081.008195
STATE OF ILLINOIS

06/22/2022

License Expires: 11–30–2022

VECTOR ENGINEERS
651 W. GALENA PARK BLVD., SUITE 101
DRAPER, UT 84020
P: (801) 990-1775 F: (801) 990-1776
VECTOR PROJECT: U0142-1464-221
IL FIRM LICENSE #: 184.005810 - COA

DRAWN	RIS-VSE
DESIGNED	RIS-VSE
REVISED	

DRAWING NOT TO SCALE.
ALL DIMENSIONS ARE IN INCHES
UNLESS OTHERWISE SPECIFIED

TOLERANCES:
DECIMAL: FRACTIONAL:
.X ±0.1 X/X ±1/16
.XX ±0.03
.XXX ±0.01
ANGLES ±.5°

ALL BENDING TOLERANCES:
± 1.0°

THIRD ANGLE PROJECTION

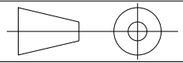

Raycap

7555-A PALMETTO COMMERCE PARKWAY NORTH
CHARLESTON, SC 29420 USA

WESTCHESTER SERVICES, LLC
SITE #: IL4218; BURR RIDGE
525 VILLAGE CENTER DRIVE
BURR RIDGE, IL 60527

DETAILS

SHEET #	REVISION
S4	A

JOB#: AT22-00921H-35R0 DATE: 6/21/22

PROPRIETARY INFORMATION: THE INFORMATION CONTAINED WITHIN THIS DRAWING SET IS PROPRIETARY & CONFIDENTIAL BY NATURE. ANY USE OR DISCLOSURE OTHER THAN THAT WHICH RELATES TO RAYCAP, INC. IS STRICTLY PROHIBITED.
COPYRIGHT 2022 RAYCAP INC. ALL RIGHTS RESERVED

VILLAGE OF
BURR RIDGE
7660 COUNTY LINE ROAD
BURR RIDGE IL 60527

MAYOR
GARY GRASSO

VILLAGE CLERK
SUE SCHAUS

VILLAGE ADMINISTRATOR
EVAN WALTER

LEGAL NOTICE OF PUBLIC HEARING

NOTICE IS HEREBY GIVEN that the Plan Commission and Zoning Board of Appeals of the Village of Burr Ridge, Cook and DuPage Counties, Illinois, will conduct the following Public Hearing beginning at 7:00 p.m. on **Monday, December 5, 2022,** at **Village Hall, 7660 County Line Road, Burr Ridge, Illinois, 60527.**

PURPOSE OF HEARING

The Plan Commission/Zoning Board of Appeals will hold a public hearing to consider requests by Nexius Solutions, Inc. on behalf of AT&T Mobility Corporation for a special use for a personal wireless facility as per section VIII.C.2 of the Zoning Ordinance and to amend Ordinance A-834-10-05 to permit alterations to the structure related to the wireless facility. The petitioner seeks to co-locate a cellular site at an existing rooftop, including installation of an antennae and support equipment. The petition number and address of this petition is Z-26-2022: 525 Village Center Drive and the Permanent Real Estate Index Number is 18-30-300-032-0000.

Public comment may be provided by individuals who physically attend the meeting at 7660 County Line Road, Burr Ridge, Illinois, 60527. All written public comment wishing to appear in the Plan Commission report shall be provided no later than Tuesday, November 29, 2022. All public comment may be emailed to Community Development Director Janine Farrell (jfarrell@burr-ridge.gov) or mailed to Ms. Farrell's attention at the address above. The Plan Commission/Zoning Board of Appeals reserves the right to continue said hearings from time to time as may be required without further notice, except as may be required by the Illinois Open Meetings Act.

BY ORDER OF THE PLAN COMMISSION/ZONING BOARD OF APPEALS OF THE VILLAGE OF BURR RIDGE, COOK AND DUPAGE COUNTIES, ILLINOIS.

Greg Trzupek, Chairman

MEMBERS: GREG TRUZPEK, MIKE STRATIS, JIM BROLINE, BARRY IRWIN, JOSEPH PETRICH, ENZA PARRELLA, RICHARD MORTON, AND DEANNA MCCOLLIAN.


Lifetime Dr
Lifetime Dr
Chico's
575
555
535
515
580
Wok N Fire
570
520
510
480
450
7650
Village Center Dr
Burr Ridge Pkwy

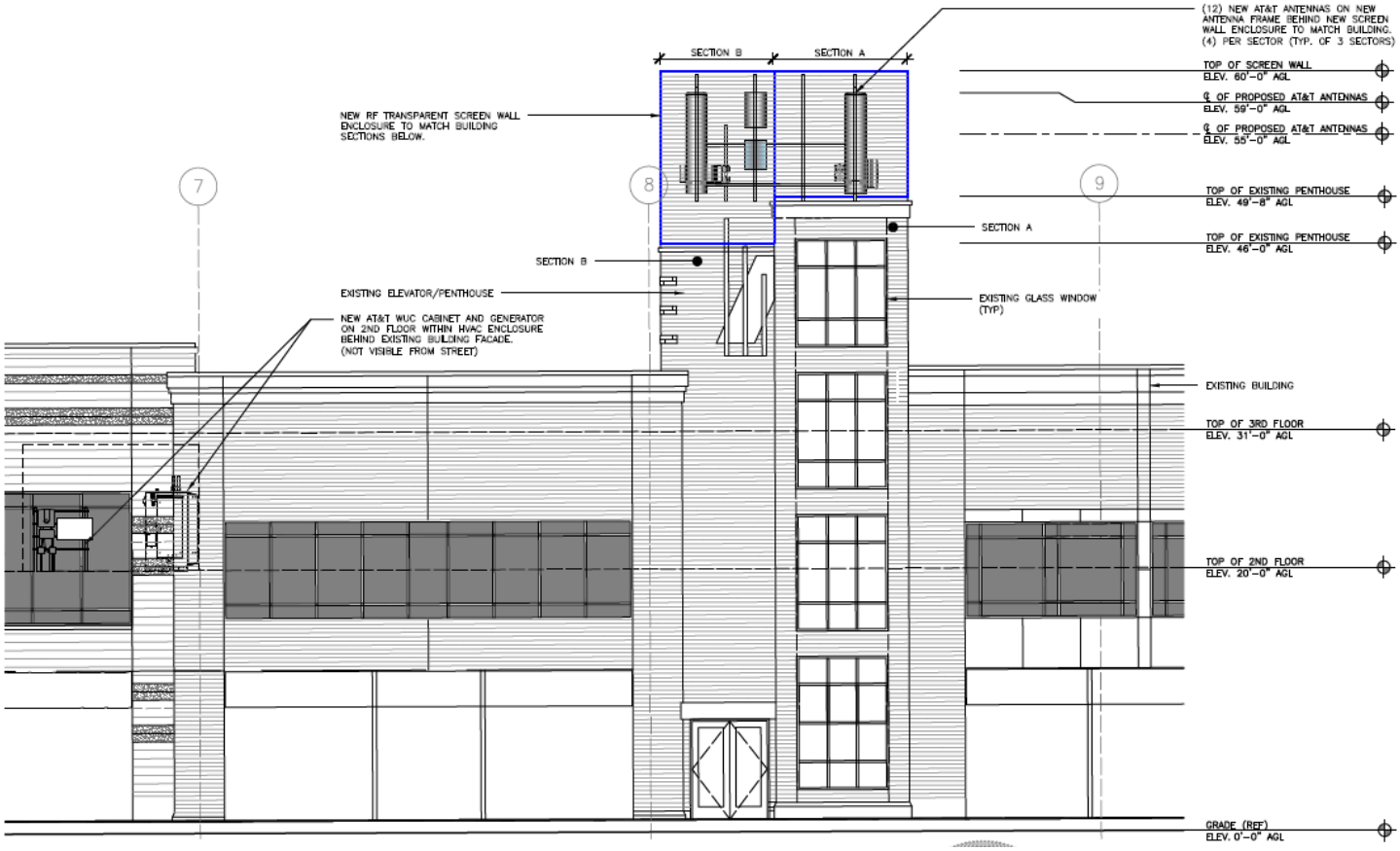
SECTION B
SECTION A
(12) NEW AT&T ANTENNAS ON NEW ANTENNA FRAME BEHIND NEW SCREEN WALL ENCLOSURE TO MATCH BUILDING. (4) PER SECTOR (TYP. OF 3 SECTORS)
TOP OF SCREEN WALL ELEV. 60'-0" AGL
℄ OF PROPOSED AT&T ANTENNAS ELEV. 59'-0" AGL
℄ OF PROPOSED AT&T ANTENNAS ELEV. 55'-0" AGL
NEW RF TRANSPARENT SCREEN WALL ENCLOSURE TO MATCH BUILDING SECTIONS BELOW.
7
8
9
TOP OF EXISTING PENTHOUSE ELEV. 49'-8" AGL
SECTION A
TOP OF EXISTING PENTHOUSE ELEV. 46'-0" AGL
SECTION B
EXISTING ELEVATOR/PENTHOUSE
EXISTING GLASS WINDOW (TYP)
NEW AT&T WUC CABINET AND GENERATOR ON 2ND FLOOR WITHIN HVAC ENCLOSURE BEHIND EXISTING BUILDING FACADE. (NOT VISIBLE FROM STREET)
EXISTING BUILDING
TOP OF 3RD FLOOR ELEV. 31'-0" AGL
TOP OF 2ND FLOOR ELEV. 20'-0" AGL
GRADE (REF) ELEV. 0'-0" AGL

18-30-300-056-1001
James Glimco
450 Village Center Drive #201
Burr Ridge, IL 60527

18-30-300-056-1002
Elizabeth Levy
450 Village Center Drive #202
Burr Ridge, IL 60527

18-30-300-056-1003
Kristin A Burka
450 Village Center Drive #203
Burr Ridge, IL 60527

18-30-300-056-1004
Joan Sikora
450 Village Center Drive #204
Burr Ridge, IL 60527

18-30-300-056-1005
Phillip Timyan
450 Village Center Drive #205
Burr Ridge, IL 60527

18-30-300-056-1006
Nicholas Lykouretzos
450 Village Center Drive #206
Burr Ridge, IL 60527

18-30-300-056-1007
Nancy Tameling
450 Village Center Drive #207
Burr Ridge, IL 60527

18-30-300-056-1008
Daniel Dabros
450 Village Center Drive #208
Burr Ridge, IL 60527

18-30-300-056-1009
Michael J. Criscione
450 Village Center Drive #209
Burr Ridge, IL 60527

18-30-300-056-1010
Dariusz Wida
450 Village Center Drive #210
Burr Ridge, IL 60527

18-30-300-056-1011
Thomas Murray
450 Village Center Drive #211
Burr Ridge, IL 60527

18-30-300-056-1012
Kevin Kopp
450 Village Center Drive #212
Burr Ridge, IL 60527

18-30-300-056-1013
Bejan Fakouri
450 Village Center Drive #213
Burr Ridge, IL 60527

18-30-300-056-1014
Mona Mekhail
450 Village Center Drive #214
Burr Ridge, IL 60527

18-30-300-056-1015
Presidio Capital LLC
3 Grant Street, Suite 415
Hinsdale, IL 60521

18-30-300-056-1016
Alexander Thomas and Ellie Homan
450 Village Center Drive #216
Burr Ridge, IL 60527

18-30-300-056-1017
Jennifer Fox
450 Village Center Drive #217
Burr Ridge, IL 60527

18-30-300-056-1018
Christopher S Cole
450 Village Center Drive #301
Burr Ridge, IL 60527

18-30-300-056-1019
Demetrio G Vea
2 Saddle Court
Burr Ridge, IL 60527

18-30-300-056-1020
Lorriance Bilthuis
450 Village Center Drive #303
Burr Ridge, IL 60527

18-30-300-056-1021
Geno Napolitano
450 Village Center Drive #304
Burr Ridge, IL 60527

18-30-300-056-1022
Filip Trajkov
450 Village Center Drive #305
Burr Ridge, IL 60527

18-30-300-056-1023
Cynthia Millinowisch
450 Village Center Drive #306
Burr Ridge, IL 60527

18-30-300-056-1024
Linnette Bullock
450 Village Center Drive #307
Burr Ridge, IL 60527

18-30-300-056-1025
Steven Jiotis
450 Village Center Drive #308
Burr Ridge, IL 60527

18-30-300-056-1026
Shirley A Strzyz
450 Village Center Drive #309
Burr Ridge, IL 60527

18-30-300-056-1027
Patricia Gould and Nicole Gould
450 Village Center Drive #310
Burr Ridge, IL 60527

18-30-300-056-1028
Jerry Lee
450 Village Center Drive #311
Burr Ridge, IL 60527

18-30-300-056-1029
Guy Santillo
450 Village Center Drive #312
Burr Ridge, IL 60527

18-30-300-056-1030
Martin Rola
450 Village Center Drive #313
Burr Ridge, IL 60527

18-30-300-056-1031
Jean M Randolph
450 Village Center Drive #314
Burr Ridge, IL 60527

18-30-300-056-1032
Thomas and Judith Rediehs
450 Village Center Drive #315
Burr Ridge, IL 60527

18-30-300-056-1033
Kerry Murphy
450 Village Center Drive #316
Burr Ridge, IL 60527

18-30-300-056-1034
Donna Grabowski
450 Village Center Drive #317
Burr Ridge, IL 60527

18-30-300-056-1035
David A Cales
450 Village Center Drive #401
Burr Ridge, IL 60527

18-30-300-056-1036
Mr. and Mrs. Caveney
450 Village Center Drive #402
Burr Ridge, IL 60527

18-30-300-056-1037
David Jelinek
450 Village Center Drive #403
Burr Ridge, IL 60527

18-30-300-056-1038
Juanito Bartolome
450 Village Center Drive #404
Burr Ridge, IL 60527

18-30-300-056-1040
Stillman Chang
9550 Pacific Court
Burr Ridge, IL 60527

18-30-300-056-1041
Ahmed & Khadija Shakir
450 Village Center Drive #408
Burr Ridge, IL 60527

18-30-300-056-1042
Artur Miller
450 Village Center Drive #409
Burr Ridge, IL 60527

18-30-300-056-1043
Jennifer Ryan
450 Village Center Drive #410
Burr Ridge, IL 60527

18-30-300-056-1045
Maihlaqa and Heena Alavi
450 Village Center Drive #411
Burr Ridge, IL 60527

18-30-300-056-1046
John Phelps
450 Village Center Drive #412
Burr Ridge, IL 60527

18-30-300-056-1046
Murray Homestead, L.L.C.
450 Village Center Drive #413
Burr Ridge, IL 60527

18-30-300-056-1047
Thomas Toellner
450 Village Center Drive #414
Burr Ridge, IL 60527

18-30-300-056-1048
Thomas F. Hurka
450 Village Center Drive #415
Burr Ridge, IL 60527

18-30-300-056-1049
David Arnold and George Izzo
450 Village Center Drive #416
Burr Ridge, IL 6527

18-30-300-056-1050
Susan M Broucek
450 Village Center Drive #417
Burr Ridge, IL 60527

18-30-300-056-1039
Mr. Dean Henning
450 Village Center Drive #405
Burr Ridge, IL 60527

18-30-300-057-1001
Iyda Ghuneim
801 Village Center Drive, Unit 201
Burr Ridge, Illinois 60527

18-30-300-057-1002
Ms. Erin Holec
801 Village Center Drive, Unit 202
Burr Ridge, Illinois 60527

18-30-300-057-1003
Mr. and Mrs. Keefe
801 Village Center Drive, Unit 203
Burr Ridge, Illinois 60527

18-30-300-057-1004
Resident
801 Village Center Drive, Unit 204
Burr Ridge, Illinois 60527

18-30-300-057-1004
Mr. Raghuvansh Kumar
8161 Ridge Pointe
Burr Ridge, Illinois 60527

18-30-300-057-1005
Rita D Stoss-Michaels
801 Village Center Drive, Unit 205
Burr Ridge, Illinois 60527

18-30-300-057-1006
Resident
801 Village Center Drive, Unit 206
Burr Ridge, Illinois 60527

18-30-300-057-1006
Alka Srivastava
9 Lake Ridge Court
Burr Ridge, Illinois 60527

18-30-300-057-1007
Shafout J. Kahn
801 Village Center Drive, Unit 207
Burr Ridge, Illinois 60527

18-30-300-057-1008
Mr. Nicholas Meyers
801 Village Center Drive, Unit 208
Burr Ridge, Illinois 60527

18-30-300-057-1009
Sarla Gupta
801 Village Center Drive, Unit 301
Burr Ridge, Illinois 60527

18-30-300-057-1010
Ms. Carol Zapka
801 Village Center Drive, Unit 302
Burr Ridge, Illinois 60527

18-30-300-057-1011
Nancy Rizzuto
801 Village Center Drive, Unit 303
Burr Ridge, Illinois 60527

18-30-300-057-1012
Mr. Dominic Fava
801 Village Center Drive, Unit 304
Burr Ridge, Illinois 60527

18-30-300-057-1013
Mr. and Mrs. Paul Bellisario
801 Village Center Drive, Unit 305
Burr Ridge, Illinois 60527

18-30-300-057-1014
Abdul Ilah Touleimat
801 Village Center Drive, Unit 306
Burr Ridge, Illinois 60527

18-30-300-057-1015
Mr. William Dillard
801 Village Center Drive, Unit 307
Burr Ridge, Illinois 60527

18-30-300-057-1022
Cartus Financial Corp
40 Apple Ridge Road
Danbury CT 06810

18-30-300-057-1016
Ms. Maureen Denard
801 Village Center Drive, Unit 308
Burr Ridge, Illinois 60527

18-30-300-057-1017
Resident
801 Village Center Drive, Unit 401
Burr Ridge, Illinois 60527

18-30-300-057-1017
Davindra L. Sharma
6652 Manor Drive
Burr Ridge, Illinois 60527

18-30-300-057-1018
Ms. Sandra Otto
801 Village Center Drive, Unit 402
Burr Ridge, Illinois 60527

18-30-300-057-1019
Debra Sutkowski-Markmann
801 Village Center Drive, Unit 403
Burr Ridge, Illinois 60527

18-30-300-057-1020
Resident
801 Village Center Drive, Unit 404
Burr Ridge, Illinois 60527

18-30-300-057-1020
Mr. Larry Edwards Siebs
34770 N. Los Reales
Carefree, AZ 85377

18-30-300-057-1021
Resident
801 Village Center Drive, Unit 405
Burr Ridge, Illinois 60527

18-30-300-057-1021
Ms. Asha Sarode
502 Ambriance Drive
Burr Ridge, IL 60527

18-30-300-057-1022
Resident
801 Village Center Drive, Unit 406
Burr Ridge, Illinois 60527

18-30-300-057-1023
Mr. and Mrs. Harbour
801 Village Center Drive, Units 407
Burr Ridge, IL 60527

18-30-300-054-1001
Resident
850 Village Center Drive, Unit 201
Burr Ridge, IL 60527

18-30-300-054-1001
Mr. and Mrs. Walk
36 S. Old Mill Lane
Burr Ridge, IL 60527

18-30-300-054-1002
Mr. and Mrs. Kyksta
850 Village Center Drive, Unit 202
Burr Ridge, IL 60527

18-30-300-054-1003
Mr. Vincenzo Marino
850 Village Center Drive, Unit 203
Burr Ridge, IL 60527

18-30-300-054-1004
Resident
850 Village Center Drive, Unit 204
Burr Ridge, IL 60527

18-30-300-054-1004
Armarjit Singh
51 Ashton Court
Burr Ridge, IL 60527

18-30-300-054-1005
Mr. Michael Simmons
850 Village Center Drive, Unit 205
Burr Ridge, IL 60527

18-30-300-054-1006
Mr. Michael Yost
850 Village Center Drive, Unit 206
Burr Ridge, IL 60527

18-30-300-054-1007
Vida Jankauskiene
850 Village Center Drive, Unit 207
Burr Ridge, IL 60527

18-30-300-054-1008
Anthony Jalovec
850 Village Center Drive, Unit 208
Burr Ridge, IL 60527

18-30-300-054-1009
Antonije Keljevick
850 Village Center Drive, Unit 209
Burr Ridge, IL 60527

18-30-300-054-1010
Nancy Segreti
850 Village Center Drive, Unit 210
Burr Ridge, IL 60527

18-30-300-054-1011
Richard Sileikis
850 Village Center Drive, Unit 211
Burr Ridge, IL 60527

18-30-300-054-1012
Resident
850 Village Center Drive, Unit 212
Burr Ridge, IL 60527

18-30-300-054-1012
Elham Abboud
1241 Ashbury Court
Libertyville, IL 60048

18-30-300-054-1013
Eloise Carnevale
850 Village Center Drive, Unit 213
Burr Ridge, IL 60527

18-30-300-054-1014
Daniel and Janet Piecki
850 Village Center Drive, Unit 214
Burr Ridge, IL 60527

18-30-300-054-1015
Nizam Ather
850 Village Center Drive, Unit 215
Burr Ridge, IL 60527

18-30-300-054-1016
Tracy Schoppen
850 Village Center Drive, Unit 216
Burr Ridge, IL 60527

18-30-300-054-1017
Kil Nam and Hee Ja Kim
850 Village Center Drive, Unit 217
Burr Ridge, Illinois 60527

18-30-300-054-1018
Colette Rennie
850 Village Center Drive, Unit 218
Burr Ridge, Illinois 60527

18-30-300-057-1024
Mr. and Mrs. Wasz
801 Village Center Drive, Units 408
Burr Ridge, IL 60527

18-30-300-054-1019
Sylvia Lee
850 Village Center Drive, Unit 219
Burr Ridge, Illinois 60527

18-30-300-054-1020
Altobelli
850 Village Center Drive, Unit 220
Burr Ridge, Illinois 60527

18-30-300-054-1021
Alice Martin
850 Village Center Drive, Unit 221
Burr Ridge, Illinois 60527

18-30-300-054-1022
Ashok Kothari
850 Village Center Drive, Unit 301
Burr Ridge, Illinois 60527

18-30-300-054-1023
Sheela Singh
850 Village Center Drive, Unit 302
Burr Ridge, Illinois 60527

18-30-300-054-1024
Resident
850 Village Center Drive, Unit 304
Burr Ridge, Illinois 60527

AVERY 5260
Easy Peel® Address Labels
Bend along line to expose Pop-up Edge
Go to avery.com/templates
Use Avery Template 5160

18-30-300-054-1024
Francisco & Laura Cervantes
7619 Drew Avenue
Burr Ridge, Illinois 60527

18-30-300-054-1025
Resident
850 Village Center Drive, Unit 305
Burr Ridge, Illinois 60527

18-30-300-054-1025
Devindra and Usha Sharma
6652 Manor Drive
Burr Ridge, IL 60527

18-30-300-054-1026
Kaleinkovas Vitalijus
850 Village Center Drive, Unit 306
Burr Ridge, Illinois 60527

18-30-300-054-1027
Suryakant Patel
6816 Fieldstone Drive
Burr Ridge, Illinois 60527

18-30-300-054-1028
Philip Jepsen
850 Village Center Drive, Unit 308
Burr Ridge, Illinois 60527

18-30-300-054-1029
Resident
850 Village Center Drive, Unit 309
Burr Ridge, Illinois 60527

18-30-300-054-1029
Diane and Kemenko Jovic
7920 Deer View Court
Burr Ridge, IL 60527

18-30-300-054-1030
James Kuksta
850 Village Center Drive, Unit 310
Burr Ridge, Illinois 60527

18-30-300-054-1031
Wesley Tate
850 Village Center Drive, Unit 311
Burr Ridge, Illinois 60527

18-30-300-054-1032
Catharine Danly
850 Village Center Drive, Unit 312
Burr Ridge, Illinois 60527

18-30-300-054-1033
Anthony Formato
850 Village Center Drive, Unit 313
Burr Ridge, Illinois 60527

18-30-300-054-1034
Mary LIsnich
850 Village Center Drive, Unit 314
Burr Ridge, Illinois 60527

18-30-300-054-1035
David Atkenson
850 Village Center Drive, Unit 315
Burr Ridge, Illinois 60527

18-30-300-054-1036
Jason Nash
850 Village Center Drive, Unit 316
Burr Ridge, Illinois 60527

18-30-300-054-1037
Resident
850 Village Center Drive, Unit 317
Burr Ridge, Illinois 60527

18-30-300-054-1037
Ann L. Vaughan
940 S. Vine Street
Hinsdale, IL 60521

18-30-300-054-1038
Mutie Naim Sughayer
850 Village Center Drive, Unit 318
Burr Ridge, Illinois 60527

18-30-300-054-1039
Kathleen Jaszka
850 Village Center Drive, Unit 319
Burr Ridge, Illinois 60527

18-30-300-054-1040
Rishi Sharma
850 Village Center Drive, Unit 320
Burr Ridge, Illinois 60527

18-30-300-054-1041
Patel
850 Village Center Drive, Unit 321
Burr Ridge, Illinois 60527

18-30-300-054-1042
Lali Singh
850 Village Center Drive, Unit 401
Burr Ridge, Illinois 60527

18-30-300-054-1043
Robert & Marie Zumstein
850 Village Center Drive, Unit 402
Burr Ridge, Illinois 60527

18-30-300-054-1044
James Chesniak
850 Village Center Drive, Unit 404
Burr Ridge, Illinois 60527

18-30-300-054-1045
Amy Seus
850 Village Center Drive, Unit 405
Burr Ridge, Illinois 60527

18-30-300-054-1046
Allan Thom
850 Village Center Drive, Unit 406
Burr Ridge, Illinois 60527

Pat: avery.com/patents
Étiquettes d'adresse Easy Peel®
Repliez à la hachure afin de révéler le rebord Pop-up
Allez à avery.ca/gabarits
Utilisez le Gabarit Avery 5160

18-30-300-054-1047
850 BR Condo LLC
850 Village Center Drive, Unit 407
Burr Ridge, Illinois 60527

18-30-300-054-1048
Gerald Cronk
850 Village Center Drive, Unit 408
Burr Ridge, Illinois 60527

18-30-300-054-1049
Mr. Edmundo Sanchez
850 Village Center Drive, Unit 410
Burr Ridge, Illinois 60527

18-30-300-054-1050
Mary Okolisam
Samuel Basillious
850 Village Center Drive, Unit 411
Burr Ridge, Illinois 60527

18-30-300-054-1051
Gregory Shultz
850 Village Center Drive, Unit 412
Burr Ridge, Illinois 60527

18-30-300-054-1052
Mr. and Mrs. Kalnes
850 Village Center Drive, Unit 413
Burr Ridge, Illinois 60527

18-30-300-054-1053
Rick Michalak
850 Village Center Drive, Unit 414
Burr Ridge, Illinois 60527

18-30-300-054-1054
Diane Vivo
850 Village Center Drive, Unit 415
Burr Ridge, Illinois 60527

18-30-300-054-1055
Resident
850 Village Center Drive, Unit 416
Burr Ridge, Illinois 60527

18-30-300-054-1055
Perm Sharma
505 Ambriance Drive
Burr Ridge, IL 60527

18-30-300-054-1056
Resident
850 Village Center Drive, Unit 417
Burr Ridge, Illinois 60527

18-30-300-054-1056
850 Burr LLC
2500 S. Highland Avenue
Suite 103
Lombard, IL 60148

18-30-300-054-1057
Lena Kasi
850 Village Center Drive, Unit 418
Burr Ridge, Illinois 60527

18-30-300-054-1058
Kumad Barman
850 Village Center Drive, Unit 419
Burr Ridge, Illinois 60527

18-30-300-054-1059
Vijay Singhal
850 Village Center Drive, Unit 420
Burr Ridge, Illinois 60527

18-30-300-054-1060
James O'Brien
850 Village Center Drive, Unit 421
Burr Ridge, Illinois 60527

18-30-300-058-1058
William Petty
1000 Village Center Drive, Unit 414
Burr Ridge, Illinois 60527

18-30-300-058-1059
Jay Christopher
1000 Village Center Drive, Unit 416
Burr Ridge, Illinois 60527

18-30-300-054-1047
850 BR Condo LLC
160 Green Tree Drive, Suite 101
Dover, Delaware 19904

18-30-300-058-1030
John Forkan
1000 Village Center Drive, Unit 214
Burr Ridge, Illinois 60527

18-30-300-058-1031
Barbara Spitkovsky
1000 Village Center Drive, Unit 215
Burr Ridge, Illinois 60527

18-30-300-058-1032
Helen Nardi
1000 Village Center Drive, Unit 216
Burr Ridge, Illinois 60527

18-30-300-058-1033
Kathleen Binks
1000 Village Center Drive, Unit 301
Burr Ridge, Illinois 60527

18-30-300-058-1034
Sharon M. Jioia
1000 Village Center Drive, Unit 302
Burr Ridge, Illinois 60527

18-30-300-058-1035
Sean Carney
1000 Village Center Drive, Unit 303
Burr Ridge, Illinois 60527

18-30-300-058-1036
Denise Lehnert
1000 Village Center Drive, Unit 304
Burr Ridge, Illinois 60527

18-30-300-058-1037
Claudia Navarro
1000 Village Center Drive, Unit 305
Burr Ridge, Illinois 60527

18-30-300-058-1038
Kathleen Becker
1000 Village Center Drive, Unit 306
Burr Ridge, Illinois 60527

18-30-300-058-1039
Brenda Helms
1000 Village Center Drive, Unit 307
Burr Ridge, Illinois 60527

18-30-300-058-1040
Virgilio N. Nidea
1000 Village Center Drive, Unit 308
Burr Ridge, Illinois 60527

18-30-300-058-1041
Frank Tabachka
1000 Village Center Drive, Unit 309
Burr Ridge, Illinois 60527

18-30-300-058-1042
Rosa Diaz Trust
1000 Village Center Drive, Unit 310
Burr Ridge, Illinois 60527

18-30-300-058-1043
Larry Marcheschi
1000 Village Center Drive, Unit 311
Burr Ridge, Illinois 60527

18-30-300-058-1044
Jean Rudolph
1000 Village Center Drive, Unit 312
Burr Ridge, Illinois 60527

18-30-300-058-1044
Mr. and Mrs. Pierre Wakim
107 Oak Ridge Drive
Burr Ridge, IL 60527

18-30-300-058-1045
Dejan Derikonjie
1000 Village Center Drive, Unit 313
Burr Ridge, Illinois 60527

18-30-300-058-1046
Jim and Leslie Bowman
1000 Village Center Drive, Unit 314
Burr Ridge, Illinois 60527

18-30-300-058-1047
Gia and Tim Ormond
1000 Village Center Drive, Unit 315
Burr Ridge, Illinois 60527

18-30-300-058-1048
Art and Amy Munar
1000 Village Center Drive, Unit 316
Burr Ridge, Illinois 60527

18-30-300-058-1049
Jim and Marriane Coogan
1000 Village Center Drive, Unit 401
Burr Ridge, Illinois 60527

18-30-300-058-1050
Asle and Kathleen Klemma
1000 Village Center Drive, Unit 403
Burr Ridge, Illinois 60527

18-30-300-058-1051
Wade Smith
1000 Village Center Drive, Unit 405
Burr Ridge, Illinois 60527

18-30-300-058-1052
Nasem Akel
1000 Village Center Drive, Unit 406
Burr Ridge, Illinois 60527

18-30-300-058-1053
Betty J. Cerveny
1000 Village Center Drive, Unit 407
Burr Ridge, Illinois 60527

18-30-300-058-1054
Nada Jensen
1000 Village Center Drive, Unit 408
Burr Ridge, Illinois 60527

18-30-300-058-1055
Tom Harris
1000 Village Center Drive, Unit 409
Burr Ridge, Illinois 60527

18-30-300-058-1056
Tom Mouroukas
1000 Village Center Drive, Unit 410
Burr Ridge, Illinois 60527

18-30-300-058-1057
Louise Junkniess
1000 Village Center Drive, Unit 411
Burr Ridge, Illinois 60527

18-30-300-058-1001
Suresh Agarwal
1000 Village Center Drive, Unit 101
Burr Ridge, Illinois 60527

18-30-300-058-1002
Stanley Karcz/Antonette Favia
1000 Village Center Drive, Unit 102
Burr Ridge, Illinois 60527

18-30-300-058-1003
Richard Scardina
1000 Village Center Drive, Unit 103
Burr Ridge, Illinois 60527

18-30-300-058-1004
Atlagic Zeliko
1000 Village Center Drive, Unit 104
Burr Ridge, Illinois 60527

18-30-300-058-1005
Dhaliwal Tehsel Singh
1000 Village Center Drive, Unit 105
Burr Ridge, Illinois 60527

18-30-300-058-1006
Lynn Rebello
1000 Village Center Drive, Unit 106
Burr Ridge, Illinois 60527

18-30-300-058-1007
Joe Canfora
1000 Village Center Drive, Unit 107
Burr Ridge, Illinois 60527

18-30-300-058-1008
Edward Dobrotka
1000 Village Center Drive, Unit 108
Burr Ridge, Illinois 60527

18-30-300-058-1009
Ahmad Zuhaib
1000 Village Center Drive, Unit 109
Burr Ridge, Illinois 60527

18-30-300-058-1010
Mohammed Daaif & Ghussoun Kassam
1000 Village Center Drive, Unit 110
Burr Ridge, Illinois 60527

18-30-300-058-1011
Kerry Postillion
1000 Village Center Drive, Unit 111
Burr Ridge, Illinois 60527

18-30-300-058-1012
Dennis Quinn
1000 Village Center Drive, Unit 112
Burr Ridge, Illinois 60527

18-30-300-058-1013
Dean Norman
1000 Village Center Drive, Unit 113
Burr Ridge, Illinois 60527

18-30-300-058-1014
Marcia Miller
1000 Village Center Drive, Unit 114
Burr Ridge, Illinois 60527

18-30-300-058-1015
Ruth Lognman
1000 Village Center Drive, Unit 115
Burr Ridge, Illinois 60527

18-30-300-058-1016
Yan Zhao
1000 Village Center Drive, Unit 116
Burr Ridge, Illinois 60527

18-30-300-058-1017
Ruthann McCarty
1000 Village Center Drive, Unit 201
Burr Ridge, Illinois 60527

18-30-300-058-1018
Scott Golchert & Jennifer Turano
1000 Village Center Drive, Unit 202
Burr Ridge, Illinois 60527

18-30-300-058-1019
Thomas Simunek
1000 Village Center Drive, Unit 203
Burr Ridge, Illinois 60527

18-30-300-058-1020
Jason Chen
1000 Village Center Drive, Unit 204
Burr Ridge, Illinois 60527

18-30-300-058-1021
Pervez & Frances Altaf
1000 Village Center Drive, Unit 205
Burr Ridge, Illinois 60527

18-30-300-058-1022
Marriane Mangan
1000 Village Center Drive, Unit 206
Burr Ridge, Illinois 60527

18-30-300-058-1023
Philip Trabaris
1000 Village Center Drive, Unit 207
Burr Ridge, Illinois 60527

18-30-300-058-1024
Annette Jones
1000 Village Center Drive, Unit 208
Burr Ridge, Illinois 60527

18-30-300-058-1025
Paula Lesniewski
1000 Village Center Drive, Unit 209
Burr Ridge, Illinois 60527

18-30-300-058-1026
Sahajpal Tripat
1000 Village Center Drive, Unit 210
Burr Ridge, Illinois 60527

18-30-300-058-1027
John O'Connor
1000 Village Center Drive, Unit 211
Burr Ridge, Illinois 60527

18-30-300-058-1028
Paul Van Huben
1000 Village Center Drive, Unit 212
Burr Ridge, Illinois 60527

18-30-300-058-1029
Mr. and Mrs. Allenson
1000 Village Center Drive, Unit 213
Burr Ridge, Illinois 60527

THOMAS J MURPHY
1000 VILLAGE CENTER DR
Burr Ridge, IL 60527

ABDUL ILAH TOULEIMAT
801 VILLAGE CTR DR 306
Burr Ridge, IL 60527

JEFFREY R HARDER
850 VILLAGE CENTER DR
Burr Ridge, IL 60527

SPASOV ESTATE LLC
7350 W 103RD ST
Bridgeview, IL 60455

MONA B GHOBRIAL
1004 LYONS HEAD
Virginia Beach, VA 23452

JON A SKULBORSTAD
1 GREY WING PT
Naples, FL 34113

Burr Deed LLC
10350 Bren Road West
Minnetonka, MN 55343

Doug Young
18267 Casey Rd
Grayslake, IL 60030

Harris Na Cre
Po Box 755
Chicago, IL 60690

Inter Contl Burr Ridge
108 Burr Ridge Rd
Essex, IL 60935

Lifetime Fitness 130
2902 Corporate Pl
Chanhassen, MN 55317

Local 731 Ps & Gp
1000 Burr Ridge Pkwy
Burr Ridge, IL 60527

Reegs Properties
Po Box 639
Hinsdale, IL 60522

Owner
101 Burr Ridge Pkwy
Burr Ridge, IL 60527

TCF National Bank
1405 Xenium Lane North
Plymouth, MN 55441

Burr Ridge Village Center
701 Village Center Dr.
Burr Ridge, IL 60527

450 Village Center Drive Condo Assn
Attn: David Jelinek, President
450 Village Center Dr.
Burr Ridge, IL 60527

450 Village Center Drive Condo Assn
Attn: David Arnold, Treasurer
450 Village Center Dr.
Burr Ridge, IL 60527

450 Village Center Drive Condo Assn
Chicagoland Management
Janet Monahan
111 E. Wacker Dr., #1412
Chicago, IL 60601

VILLAGE OF BURR RIDGE

MEMORANDUM

TO: Village of Burr Ridge Plan Commission
Greg Trzupek, Chairman

FROM: Janine Farrell, AICP
Community Development Director

DATE: December 5, 2022

RE: **PC-07-2022; Annual Appointment of Plan Commission Vice Chairperson - One Year Term Beginning January 1, 2023**

The Rules of Procedure for the Plan Commission require a rotating Vice Chair with an annual nomination by the Plan Commission and approval by the Board of Trustees. The sole duty of the Vice Chair is to serve as acting Chair when the Chairperson is not in attendance.

The Vice Chair position has been held by the following current Commissioners over the course of the last several years:

2022: Commissioner Petrich
2021: Commissioner Farrell
2020: Commissioner Irwin
2019: Commissioner Stratis
2018: Commissioner Broline

The rules state that the Vice Chair position should rotate among those willing to serve. The Plan Commission should make a recommendation and forward that recommendation to the Village Board for confirmation.