DREDGED MATERIAL MANAGEMENT AREA BV-52 WEIR, WALKWAY, AND PIPELINE REPLACEMENT

BREVARD COUNTY, FLORIDA

LOCATION MAP

N.T.S.

DRAWING INDEX

C-1	TITLE SHEET
C-2	GENERAL NOTES
C-3	DEMOLITION PLAN
C-4	SITE PLAN
C-5	PROFILES
C-6	DETAILS
S-1	WEIR PLAN AND PROFILE
S-2	ALUMINUM WALKWAY PLAN
S-3	ALUMINUM WALKWAY FRAMING PLAN AND DETAILS
S-4	ALUMINUM WALKWAY DETAILS
S-5	ALUMINUM WALKWAY AND FOUNDATION DETAILS
S-6	WEIR FOUNDATION DETAILS
S-7	STEEL WEIR ELEVATIONS
S-8	STEEL WEIR DETAILS
S-9	STEEL WEIR DETAILS
S-10	STEEL WEIR AND ALUMINUM FLAP GATE DETAILS
S-11	STEEL WEIR LADDER DETAILS
X-1	EROSION CONTROL DETAILS

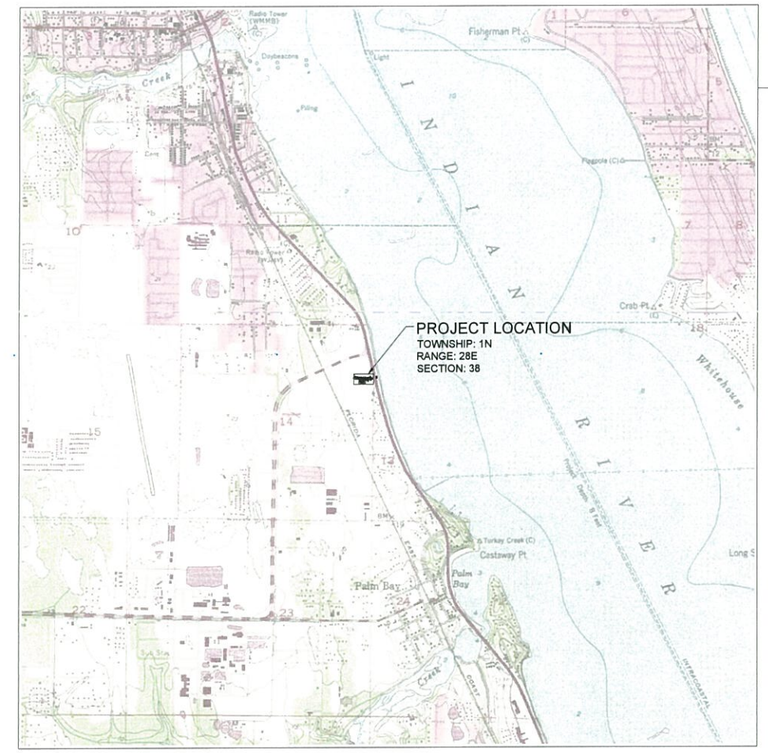

REFERENCE:
ESRI, USA TOPO MAPS

VICINITY MAP

1"= 2000' (22x34)
1"= 4000' (11x17)

SUNSHINE STATE ONE CALL OF FLORIDA
SUNSHINE 811 - ALWAYS CALL 811
BEFORE YOU DIG
1-800-638-4097

TAYLOR ENGINEERING INC.
10151 DEERWOOD PARK BLVD
BLDG 300, SUITE 300
JACKSONVILLE, FLORIDA 32256
(904)-731-7040
1221 AIRPORT ROAD
SUITE 210
DESTIN, FL 32541
(850)-460-7040
CERTIFICATE OF AUTHORIZATION # 4815

PROJECT TITLE
DREDGED MATERIAL MANAGEMENT AREA BV-52 WEIR, WALKWAY, AND PIPELINE REPLACEMENT
BREVARD COUNTY, FLORIDA

PROJECT NO	C2017-029
DATE	AUG 2018

SEAL
K. A. KNIGHT LICENSE NO 58084 STATE OF FLORIDA PROFESSIONAL ENGINEER
8-8-18
KEITH A. KNIGHT PE 58084

C-1

SHEET 1 OF 15

ANTON FLEVELLING, 8/8/2018 11:35:09 AM, X:\sys\Projects\c2017-029_BV52\Construction\c2017-029-M-Title.dwg

GENERAL NOTES

1. THE CONTRACTOR SHALL PROVIDE ACCESS TO THE WORK FOR INSPECTION BY THE EOR, ENGINEER, AND OWNER.
2. THE CONTRACTOR IS RESPONSIBLE FOR COORDINATION WITH THE EOR AND THE ENGINEER AS NECESSARY FOR CONSTRUCTION INSPECTION. THE CONTRACTOR SHALL NOTIFY THE EOR AND THE ENGINEER AT APPROPRIATE AND APPROVED TIMES DURING THE COURSE OF THE WORK THAT THE CONTRACTOR IS READY FOR INSPECTION. WORK THAT IS ASSEMBLED OR COVERED SO THAT THE ENGINEER CANNOT INSPECT THE WORK PROPERLY SHALL BE DISASSEMBLED, UNCOVERED, OR DESTROYED AS NECESSARY FOR INSPECTION. THE COSTS OF REPAIR OR RESTORATION OF THIS WORK SHALL BE BORNE SOLELY BY THE CONTRACTOR.
3. THE CONTRACTOR SHALL PROVIDE PERSONNEL AND EQUIPMENT FOR THE ENGINEER TO OBSERVE AND INQUIRE ABOUT THE WORK. THIS MAY INCLUDE PROJECT MANAGERS, SUPERINTENDENTS, FOREMEN, LABORERS, LADDERS, HARD HATS, BOATS, LIFE JACKETS, LIFTS, SCAFFOLDING, MEASURING DEVICES, SURVEY EQUIPMENT, ETC.
4. ALL REQUIRED SUBMITTALS OR MANUFACTURER'S INFORMATION SHALL BE IN U.S. CUSTOMARY UNITS. ALL SUBMITTALS USING METRIC UNITS WILL BE REJECTED AND RETURNED WITHOUT COMMENT.
5. THE CONTRACTOR SHALL FIELD VERIFY ALL DIMENSIONS.
6. THE CONTRACTOR SHALL LOCATE ALL ABOVE-GROUND AND BELOW-GROUND UTILITIES BEFORE BEGINNING WORK.
7. IN THE CASE OF AN INCONSISTENCY BETWEEN DRAWINGS AND SPECIFICATIONS OR WITHIN EITHER DOCUMENT NOT CLARIFIED BY ADDENDUM, THE BETTER QUALITY OR GREATER QUANTITY OF WORK SHALL BE PROVIDED IN ACCORDANCE WITH THE ENGINEER'S INTERPRETATION.
8. THE CONTRACTOR SHALL BE RESPONSIBLE FOR DAMAGE TO ADJACENT FACILITIES CAUSED BY HIS ACTIVITIES DURING PERFORMANCE OF THE WORK. THE CONTRACTOR SHALL RESTORE ALL SUCH DAMAGES TO THEIR PRE-CONSTRUCTION CONDITION AT NO COSTS TO THE OWNER.
9. THE CONTRACTOR SHALL BE RESPONSIBLE FOR THE SHORING AND DEWATERING OF ALL OPEN EXCAVATIONS. SHORING AND TRENCHING SHALL COMPLY WITH OSHA STANDARDS AND THE FLORIDA SAFE TRENCH ACT.
10. DRAINAGE FROM STORMWATER, GROUND WATER, OR DE-WATERING SHALL BE CONTROLLED ONSITE. DRAINAGE NOT PREVIOUSLY DISCHARGED OFFSITE SHALL NOT BE DISCHARGED TO ADJACENT PROPERTIES DURING THE COURSE OF THE WORK.
11. ONSITE SOILS SHALL NOT BE ALLOWED TO ERODE OR OTHERWISE MOVE TO ADJACENT PROPERTIES.
12. THE CONTRACTOR SHALL BE RESPONSIBLE FOR PROVIDING BARRIERS AND SIGNS ADEQUATE TO PREVENT NORMAL PUBLIC ACCESS.
13. THE CONTRACTOR SHALL MAINTAIN A SET OF RECORD DRAWINGS AND SHALL KEEP A RECORD OF ALL DEVIATIONS FROM THE ORIGINAL DRAWINGS MARKED IN RED PENCIL OR PEN. THE RECORD DRAWINGS SHALL BE KEPT ONSITE AND SHALL BE AVAILABLE FOR OBSERVATION BY THE ENGINEER.
14. THE CONTRACTOR IS RESPONSIBLE FOR TEMPORARY SHORING, BRACING, OR OTHER MEANS/METHODS NECESSARY TO STABILIZE THE STRUCTURE UNTIL COMPLETED WITH ALL COMPONENTS INSTALLED. UNLESS SPECIFICALLY STATED IN THE DRAWINGS, THE CONTRACTOR SHALL ASSUME THE EOR HAS ONLY DESIGNED THE STRUCTURE(S) FOR THE FINAL CONSTRUCTED AND ASSEMBLED STATE AS SHOWN ON THE DRAWINGS.
15. ALL PERMANENT MATERIAL SHALL BE NEW. USED, RECONDITIONED, OR REMANUFACTURED MATERIAL SHALL NOT BE USED UNLESS APPROVED BY THE OWNER IN WRITING.
16. ALL STORAGE OR STOCKPILING OF TOOLS AND MATERIAL, AND OPERATION OF HEAVY EQUIPMENT ASSOCIATED WITH CONSTRUCTION SHALL BE LIMITED TO AREAS AUTHORIZED BY THE ENGINEER.
17. ALL WORK SHALL BE PERFORMED IN ACCORDANCE WITH THE FLORIDA BUILDING CODE, COUNTY, AND MUNICIPAL RULES AND REGULATIONS.

PERMITS AND PERMIT CONDITIONS

1. THE CONTRACTOR SHALL BE RESPONSIBLE FOR OBTAINING ALL PERMITS NOT SUPPLIED BY THE OWNER. COSTS OF OBTAINING PERMITS NOT SUPPLIED BY THE OWNER SHALL BE BORNE BY THE CONTRACTOR. THIS SHALL INCLUDE BUT NOT BE LIMITED TO: NPDES PERMIT (OR NOI), CLEARING OR LAND DISTURBANCE PERMITS, TREE IMPACT PERMITS, CITY OR COUNTY BUILDING PERMITS, DRIVEWAY OR ENTRANCE PERMITS, TEMPORARY UTILITIES PERMITS, ETC.
2. THE CONTRACTOR SHALL IMPLEMENT AND MAINTAIN EROSION CONTROL MEASURES AS NECESSARY TO COMPLY WITH LOCAL, STATE, AND FEDERAL LAWS AND REGULATIONS. ALL WETLAND AREAS AND WATER BODIES OUTSIDE THE SPECIFIC LIMITS OF CONSTRUCTION AUTHORIZED BY THIS PERMIT SHALL BE PROTECTED FROM EROSION, SILTATION, SCOURING, AND/OR DEWATERING. WITHIN 7 DAYS OF ANY CONSTRUCTION ACTIVITY, EROSION BARRIERS SHALL BE INSTALLED PRIOR TO ANY EXCAVATION OR PLACEMENT OF FILL MATERIAL. ALL EROSION CONTROL MEASURES SHALL BE MAINTAINED IN EFFECTIVE CONDITION AT ALL LOCATIONS UNTIL CONSTRUCTION IS COMPLETED AND DISTURBED AREAS ARE STABILIZED.
3. EROSION CONTROL MEASURES SHOWN ON THE DRAWINGS ARE A MINIMUM. ADDITIONAL EROSION CONTROL MEASURES MAY BE REQUIRED BY PERMIT AUTHORITIES. ANY ADDITIONAL EROSION CONTROL MEASURES SHALL BE SUPPLIED AND INSTALLED BY THE CONTRACTOR AT NO ADDITIONAL COSTS TO THE OWNER.
4. IF HISTORICAL OR ARCHAEOLOGICAL ARTIFACTS ARE DISCOVERED AT ANY TIME ON THE PROJECT SITE, THE CONTRACTOR SHALL IMMEDIATELY CONTACT THE ENGINEER OF RECORD AND CEASE WORK IN THE AREA THE ARTIFACTS WERE IDENTIFIED.

AS-BUILT SURVEYS

1. THE CONTRACTOR SHALL INCLUDE THE COST OF AN AS-BUILT SURVEY IN THE BID PRICE. THE AS-BUILT SURVEY SHALL BE SIGNED AND SEALED BY A PROFESSIONAL SURVEY LICENSED IN THE STATE THE PROJECT IS IN AND SHALL SHOW THE LOCATION AND ELEVATION OF ALL CONSTRUCTED FEATURES.

WORK SEQUENCE

1. THE EXISTING DIKE SECTION, WEIRS, WALKWAY, AND PIPES SHALL BE REMOVED IN ACCORDANCE WITH THE DEMOLITION PLAN. ALL DEMOLISHED MATERIAL SHALL BE REMOVED FROM THE PROJECT SITE AND DISPOSED OF IN ACCORDANCE WITH STATE AND LOCAL LAWS AND REGULATIONS.
2. EXISTING DREDGED MATERIAL THAT LIES WITHIN THE FOOTPRINT OF THE PROPOSED WEIR FOUNDATION SHALL BE EXCAVATED TO THE ORIGINAL BASIN ELEVATION AS SHOWN IN THE GRADING PLAN. EXCAVATED MATERIAL SHALL BE MOVED TO THE WESTERN BASIN OF THE DMMA. THE CONTRACTOR SHALL ANCTICIPATE DEWATERING DURING THIS PHASE OF THE WORK. DEWATERING EFFLUENT SHALL BE CONTAINED WITHIN THE BASIN AREA OF THE DMMA.
3. THE WEIR PAD (AS SHOWN IN THE WEIR PLAN AND PROFILE) SHALL BE CONSTRUCTION FROM CLEAN SAND OBTAINED FROM THE BASIN AREA OF THE DMMA. THE PIPE BEDDING SAND SHALL BE GRADED AND COMPACTED.
4. THE CONCRETE WORK SHALL BE COMPLETED AND ALLOWED TO CURE AS SPECIFIED IN SECTION 03 30 00 CAST-IN-PLACE CONCRETE.
5. THE NEW WEIRS, WALKWAY, PIPES SHALL BE INSTALLED IN ACCORDANCE WITH THE PROJECT DRAWINGS.
6. THE DIKE SECTION SHALL BE REBUILT IN LIFTS AS DESCRIBED IN SECTION 31 23 00 - DIKE AND EARTHWORK CONSTRUCTION.
7. ALL DISTURBED GROUND SURFACE SHALL RECEIVE SOD AS DESCRIBED IN SECTION 32 92 19.

PROJECT DATUM

1. ALL UNITS ARE IN FEET UNLESS NOTED OTHERWISE.
2. HORIZONTAL DATUM = STATE PLANE COORDINATES NAD83/FLORIDA EAST.
3. VERTICAL DATUM = NGVD 29.

FABRICATION AND COATING DATA

1. THIS SECTION PROVIDES AN ABBREVIATED SUMMARY OF THE FABRICATION AND COATING REQUIREMENTS. SEE SECTION 33 40 00 STEEL BOX WEIRS FOR FULL AND DETAILED INSTRUCTIONS.
2. BOX WEIRS SHALL BE FABRICATED OF ASTM A36 OR ASTM A572 GRADE 50 STEEL. BOX WEIRS SHALL BE COATED WITH COAL TAR EPOXY.
3. LADDERS SHALL BE FABRICATED OF ASTM A36 STEEL AND HOT-DIP GALVANIZED.
4. FLAP GATES SHALL BE FABRICATED OF ALUMINUM TEMPER 6061-T6 AND SHALL NOT BE COATED.
5. WALKWAY SHALL BE FABRICATED OF ALUMIMUM TEMPER 6061-T6 AND SHALL NOT BE COATED.
6. WALKWAY GRATING SHALL BE FABRICATED OF ALUMIMUM TEMPER 6063-T6 AND SHALL NOT BE COATED.
7. CONNECTIONS AND ANCILLARY MATERIALS SHALL BE AS DESCRIBED IN SECTION 33 40 00 - STEEL BOX WEIRS AND ALUMINUM WALKWAYS.

TAYLOR ENGINEERING INC.
10151 DEERWOOD PARK BLVD
BLDG 300, SUITE 300
JACKSONVILLE, FLORIDA 32256
(904)-731-7040
1211 AIRPORT ROAD
SUITE 102
DESTIN, FL 32541
(850) 460-7201
CERTIFICATE NO. 8765

SEAL: K. A. KNIGHT LICENSED No 58084 STATE OF FLORIDA PROFESSIONAL ENGINEER

KEITH A. KNIGHT P.E.# 58084

PROJECT TITLE

DREDGED MATERIAL MANAGEMENT AREA BV-52 WEIR, WALKWAY, AND PIPELINE REPLACEMENT
BREVARD COUNTY, FLORIDA

SUNSHINE STATE ONE CALL OF FLORIDA
SUNSHINE 811 - ALWAYS CALL 811 BEFORE YOU DIG
1-800-638-4097

NO	ZONE	REVISIONS / SUBMISSIONS	DATE
2			
2			
2			
1			

PROJECT NO	C2017-029
DATE	AUG 2018
DESIGNED	DSGNBY
DRAWN	AF
CHECKED	CHECKBY
REVIEWED	REVBY
SCALE	AS SHOWN

DRAWING TITLE

GENERAL NOTES

C-2

SHEET 2 OF 15

ANTON FLEWELLING, 6/8/2018 11:35:14 AM, X:\sys\Projects\2017-029_BV52\Construction\2017-029-M-Notes.dwg

REMOVE CONCRETE INLET

EXCAVATE TO 11.8'

EXISTING 24"Ø CMP PIPE TO BE REMOVED

APPROXIMATE EXCAVATION CONTOURS (TYP)

EXISTING CONTOURS (TYP)

EXISTING 54"Ø STEEL CASING TO BE INSPECTED BY CONTRACTOR. SEE SPECIFICATIONS

REMOVE 42"Ø CMP FROM INSIDE CASING PIPE

EXCAVATE TO 7.2'

EXISTING 42"Ø CMP TO BE REMOVED

2H:1V (TYP)

EXCAVATE TO 6.8'

EXCAVATE TO 6.7'

EXISTING DIKE PERIMETER ROAD TO BE RESTORED AFTER WEIR INSTALLATION

2H:1V (TYP)

EXISTING 24"Ø STEEL CASING TO BE INSPECTED BY CONTRACTOR. SEE SPECIFICATIONS

INSTALL TEMPORARY CONCRETE BARRIERS TYPE K FDOT INDEX 414

EXISTING EXTERIOR DIKE RAMP TO BE RESTORED AFTER WEIR INSTALLATION

EXISTING PIPE TO BE REMOVED

EXISTING DIKE PERIMETER ROAD TO BE RESTORED AFTER WEIR INSTALLATION

REMOVE CONCRETE INLET

EXISTING DIKE CREST

2H:1V (TYP)

REMOVE EXISTING GRAVEL UNDERDRAIN AS NECESSARY

EXCAVATE TO 8.5'

APPROXIMATE LIMIT OF GRADING (TYP)

APPROXIMATE LOCATION OF (3) EXISTING 24"Ø CMP PIPE TO BE REMOVED (TYP)

APPROXIMATE LOCATION OF (3) EXISTING HALF-PIPE WEIRS TO BE REMOVED (TYP)

A

0 20' 40' 80'

GRAPHIC SCALE
22X34: 1" = 20'
11X17: 1" = 40'

ESTIMATED EXCAVATION VOLUME: 7,097 CY

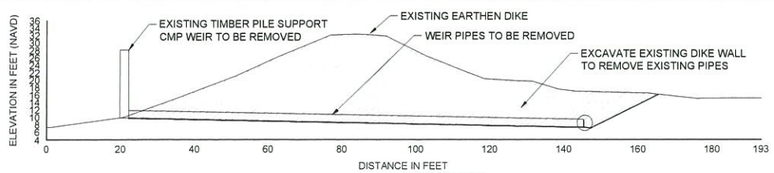

A SECTION
1"=20'

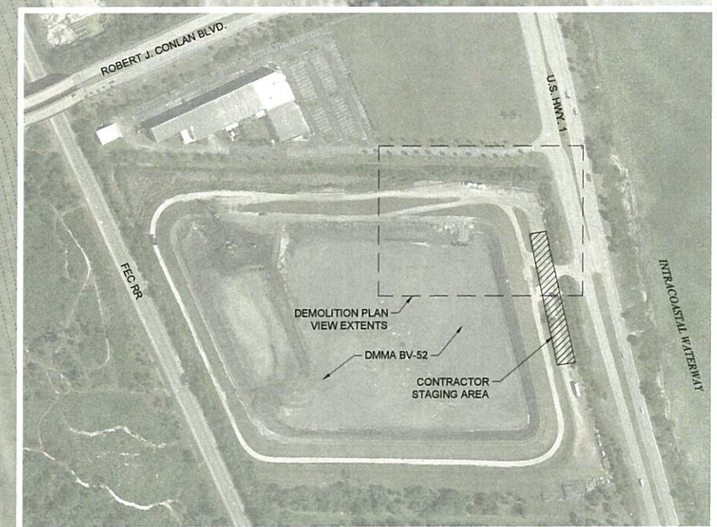

DMMA BV-52 KEY PLAN
22X34: 1" = 200'
11X17: 1" = 400'
0 200 400'

TAYLOR ENGINEERING INC.
10151 DEERWOOD PARK BLVD
BLDG 300, SUITE 300
JACKSONVILLE, FLORIDA 32256
(904)-731-7040
1221 AIRPORT ROAD
SUITE 210
DESTIN, FL 32541
(850)-460-1040
CERTIFICATE OF AUTHORIZATION

SEAL
K. A. KNIGHT
LICENSED
No. 58084
STATE OF FLORIDA
PROFESSIONAL ENGINEER
8-8-18
KEITH A. KNIGHT P.E.# 58084

PROJECT TITLE

DREDGED MATERIAL MANAGEMENT AREA BV-52 WEIR, WALKWAY, AND PIPELINE REPLACEMENT

BREVARD COUNTY, FLORIDA

SUNSHINE STATE ONE CALL OF FLORIDA
SUNSHINE 811 - ALWAYS CALL 811 BEFORE YOU DIG
1-800-638-4097

NO	ZONE	REVISIONS / SUBMISSIONS	DATE
2			
2			
2			
1			

PROJECT NO	C2017-029
DATE	AUG 2018
DESIGNED	DSGNBY
DRAWN	AF
CHECKED	CHECKBY
REVIEWED	REVBY
SCALE	AS SHOWN

DRAWING TITLE

DEMOLITION PLAN

C-3

SHEET 3 OF 15

ANTON FLEWELLING, 8/8/2018 11:35:28 AM, X:\sys\Projects\C2017-029_BV52\Construction\C2017-029-M-Demo Plan.dwg

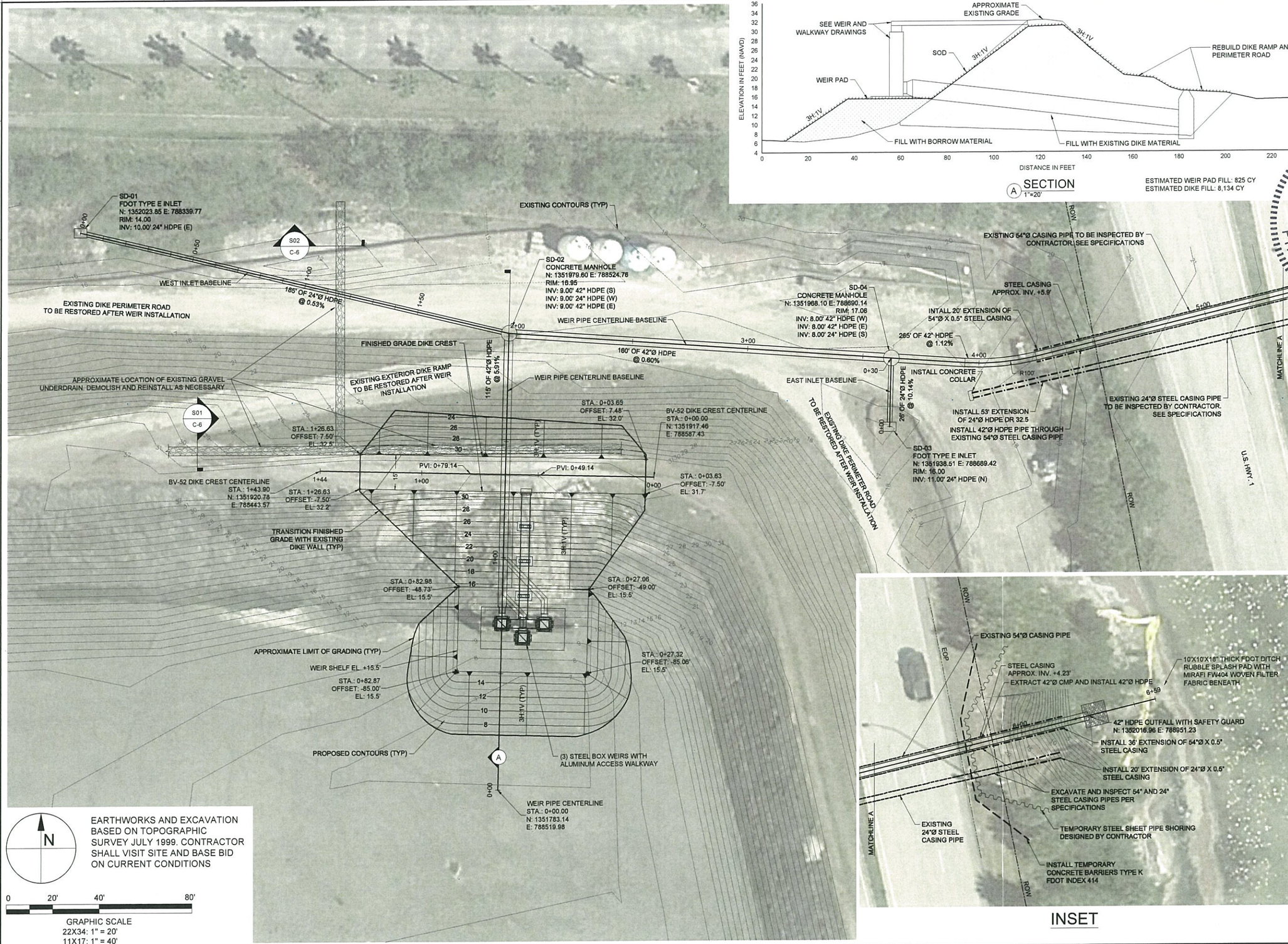

A SECTION
1"=20'

ESTIMATED WEIR PAD FILL: 825 CY
ESTIMATED DIKE FILL: 8,134 CY

TAYLOR ENGINEERING INC.
10151 DEERWOOD PARK BLVD
BLDG 300, SUITE 300
JACKSONVILLE, FLORIDA 32256
(904)-731-7040
1221 AIRPORT ROAD
SUITE 210
DESTIN, FL 32541
(850)-460-7040
CERTIFICATE OF AUTHORIZATION # 8591

SEAL
LICENSED PROFESSIONAL ENGINEER
No 58084
STATE OF FLORIDA
KENTH A. KNIGHT P.E. # 58084
PROJECT TITLE

DREDGED MATERIAL MANAGEMENT AREA BV-52 WEIR, WALKWAY, AND PIPELINE REPLACEMENT

BREVARD COUNTY, FLORIDA

SUNSHINE STATE ONE CALL OF FLORIDA
SUNSHINE 811 - ALWAYS CALL 811
BEFORE YOU DIG
1-800-638-4097

NO	ZONE	REVISIONS / SUBMISSIONS	DATE
2			
2			
2			
1			

PROJECT NO	C2017-029
DATE	AUG 2018
DESIGNED	DSGNBY
DRAWN	AF
CHECKED	CHECKBY
REVIEWED	REVBY
SCALE	AS SHOWN

DRAWING TITLE

SITE PLAN

C-4

SHEET 4 OF 15

ANTON FLEWELLING, 8/8/2018 11:36:22 AM, X:\sys\Projects\2017-029_BV52\Construction\C2017-029-M-Grading Plan.dwg

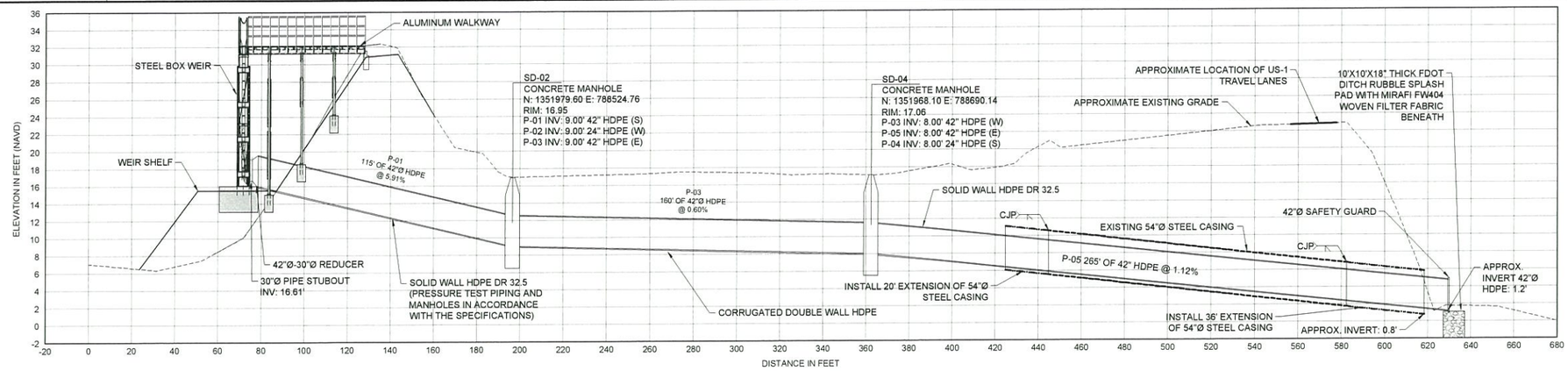

NOTE: MANHOLES SHALL BE 8'Ø UNLESS OTHERWISE APPROVED BY ENGINEER

WIER PIPE CENTERLINE PROFILE

22x34: 1" = 30'
11x17: 1" = 60'
0 30' 60'

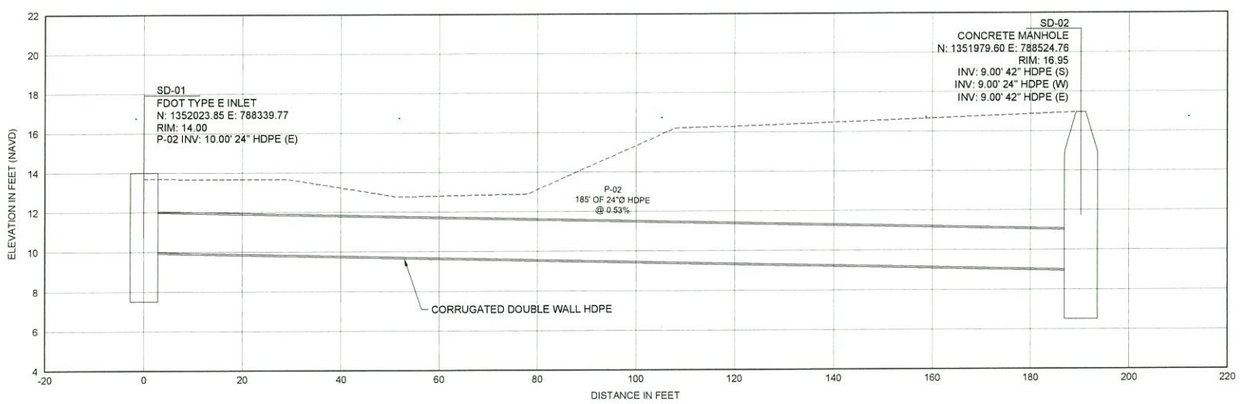

WEST INLET PROFILE

22x34: 1" = 15'
11x17: 1" = 30'
0 15' 30'

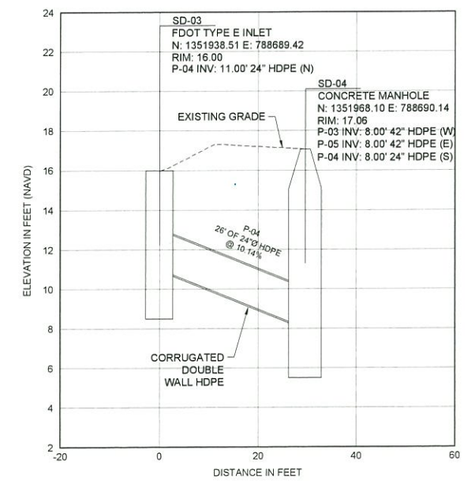

EAST INLET PROFILE

22x34: 1" = 15'
11x17: 1" = 30'
0 15' 30'

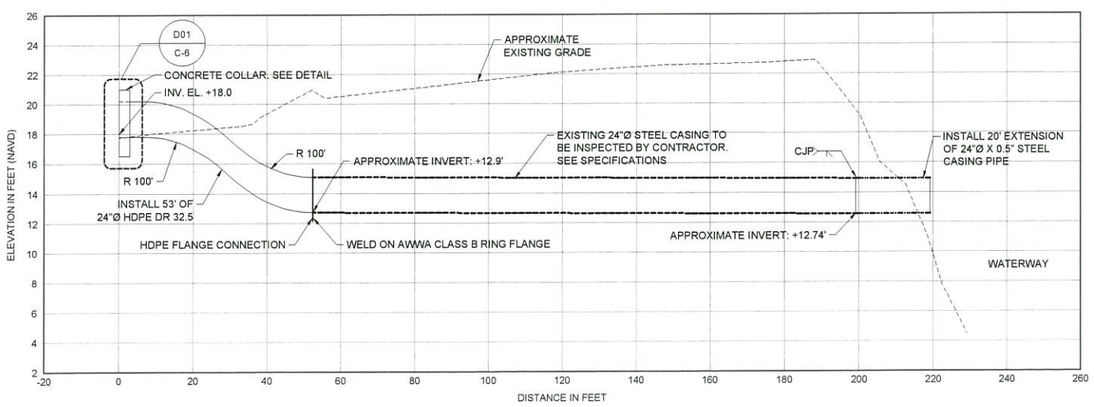

24-IN DIA STEEL CASING PIPE PROFILE

22x34: 1" = 20'
11x17: 1" = 40'
0 20' 40'

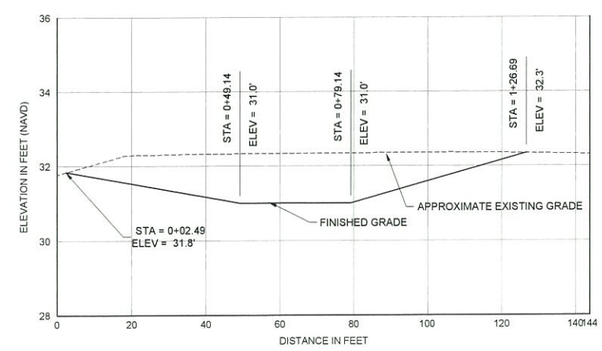

DIKE CREST CENTERLINE PROFILE

22x34: 1" = 20'
11x17: 1" = 40'
0 20' 40'

TAYLOR ENGINEERING INC.
10151 DEERWOOD PARK BLVD
BLDG 300, SUITE 300
JACKSONVILLE, FLORIDA 32256
(904)-731-7040
1221 AIRPORT ROAD
SUITE 210
DESTIN FL 32541
(850)-460-7040
CERTIFICATE OF AUTHORIZATION # 4815

SEAL: KEITH A. KNIGHT LICENSE No 58084 STATE OF FLORIDA PROFESSIONAL ENGINEER

KEITH A. KNIGHT, P.E. #58084

PROJECT TITLE

DREDGED MATERIAL MANAGEMENT AREA BV-52 WEIR, WALKWAY, AND PIPELINE REPLACEMENT
COUNTY, FLORIDA

SUNSHINE STATE ONE CALL OF FLORIDA
SUNSHINE 811 - ALWAYS CALL 811 BEFORE YOU DIG
1-800-638-4097

NO	ZONE	REVISIONS / SUBMISSIONS	DATE
2			
2			
2			
1			

PROJECT NO	C2017-029
DATE	AUG 2018
DESIGNED	DSGNBY
DRAWN	AF
CHECKED	CHECKBY
REVIEWED	REVBY
SCALE	AS SHOWN

DRAWING TITLE

PROFILES

C-5

SHEET XX OF XX

ANTON FLEVELLING, 8/8/2018 11:30:44 AM, X:\sys\Projects\c2017-029_BV52\Construction\c2017-029-M-Profiles.dwg

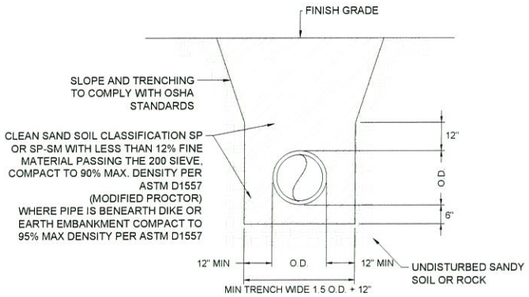

TYPICAL TRENCH DETAIL FOR PIPE INSTALLATION

NOT TO SCALE

NOTE:
WHERE SURROUNDING IN-SITU SOILS CONTAIN GREATER THAN 30" FINES, MINIMUM TRENCH WIDTH FOR PLASTIC PIPE SHALL BE 3 TIMES THE PIPE DIAMETER OR AS DIRECTED BY ENGINEER

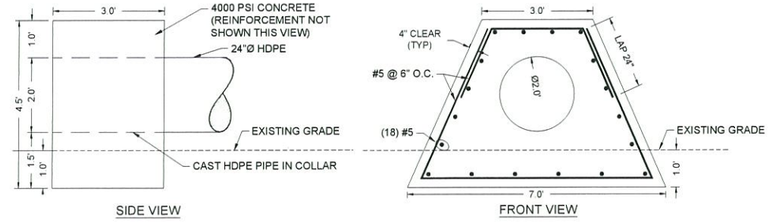

D01 / C-5 **CONCRETE COLLAR DETAIL**

NOT TO SCALE

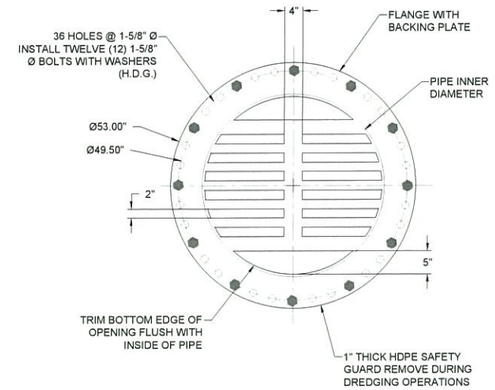

42-IN HDPE SAFETY GUARD

22x34: 1" = 1'
11x17: 1" = 2'

0 1' 2'

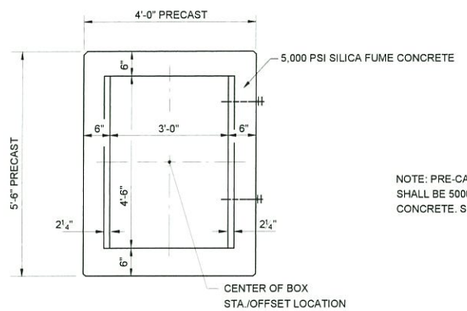

NOTE: PRE-CAST CONCRETE SHALL BE 5000 PSI SILICA FUME CONCRETE. SEE SPECIFICATIONS

PLAN

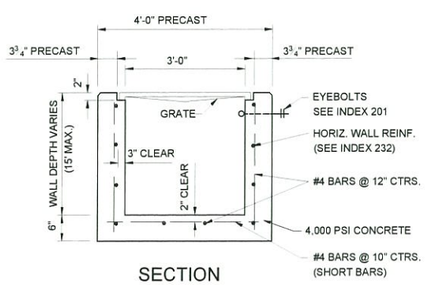

SECTION

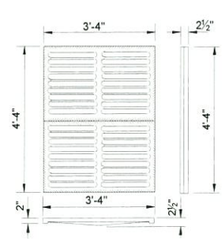

GRATE

FDOT INDEX 232 PRE-CAST TYPE E DITCH BOTTOM INLET

NOT TO SCALE

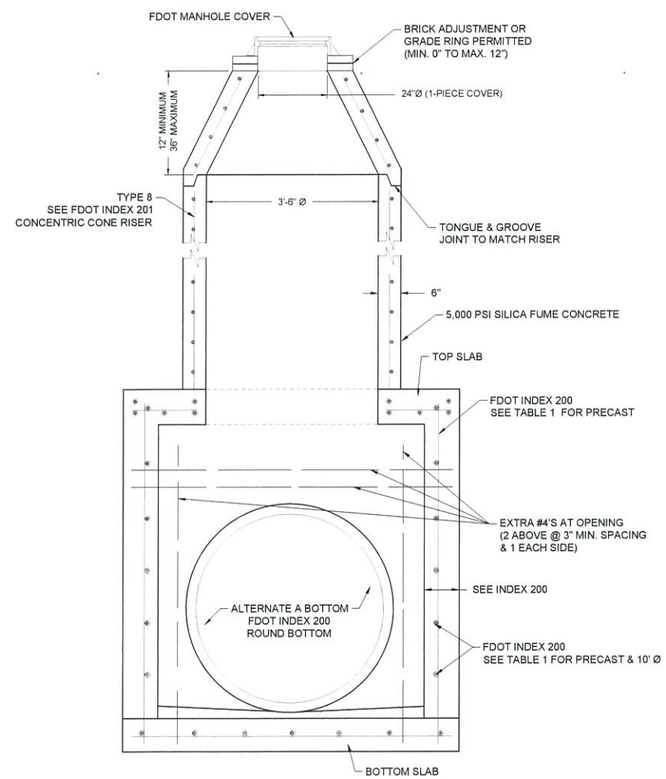

MANHOLE DETAIL FDOT INDEX 200 TYPE 8 PRE-CAST CONCENTRIC CONE RISER ALTERNATE A ROUND BOTTOM

NOT TO SCALE

NOTE: MANHOLE AND PIPE JOINTS SHALL BE WATER TIGHT TO 10 PSI. SEE SPECIFICATIONS

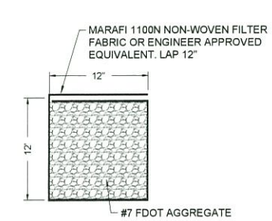

S01 / C-4 **EXISTING UNDERDRAIN**

NOT TO SCALE

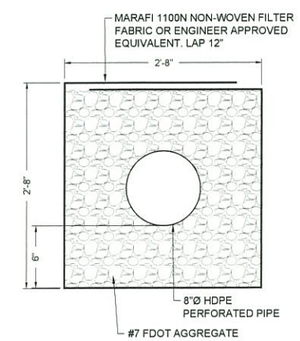

S02 / C-4 **EXISTING UNDERDRAIN OUTFALL**

NOT TO SCALE

TAYLOR ENGINEERING INC.
10151 DEERWOOD PARK BLVD
BLDG 300, SUITE 300
JACKSONVILLE, FLORIDA 32256
(904) 731-7040
221 AIRPORT ROAD
SUITE 210
DESTIN, FL 32541
(850) 654-7040
CERTIFICATE OF AUTHORIZATION #4815

SEAL

K. A. KNIGHT
No. 58084
STATE OF FLORIDA
PROFESSIONAL ENGINEER

KEITH A. KNIGHT PE # 58084

PROJECT TITLE

DREDGED MATERIAL MANAGEMENT AREA BV-52 WEIR, WALKWAY, AND PIPELINE REPLACEMENT
COUNTY, FLORIDA

SUNSHINE STATE ONE CALL OF FLORIDA
SUNSHINE 811 - ALWAYS CALL 811 BEFORE YOU DIG
1-800-638-4097

NO	ZONE	REVISIONS / SUBMISSIONS	DATE
2			
2			
2			
1			

PROJECT NO	C2017-029
DATE	AUG 2018
DESIGNED	DSGNBY
DRAWN	AF
CHECKED	CHECKBY
REVIEWED	REVBY
SCALE	AS SHOWN

DRAWING TITLE

DETAILS

C-6

SHEET XX OF XX

ANTON FLEVELLING, 8/8/2018 11:36:50 AM, X:\sys\Projects\C2017-029_BV52\Construction\C2017-029-M-Details1.dwg

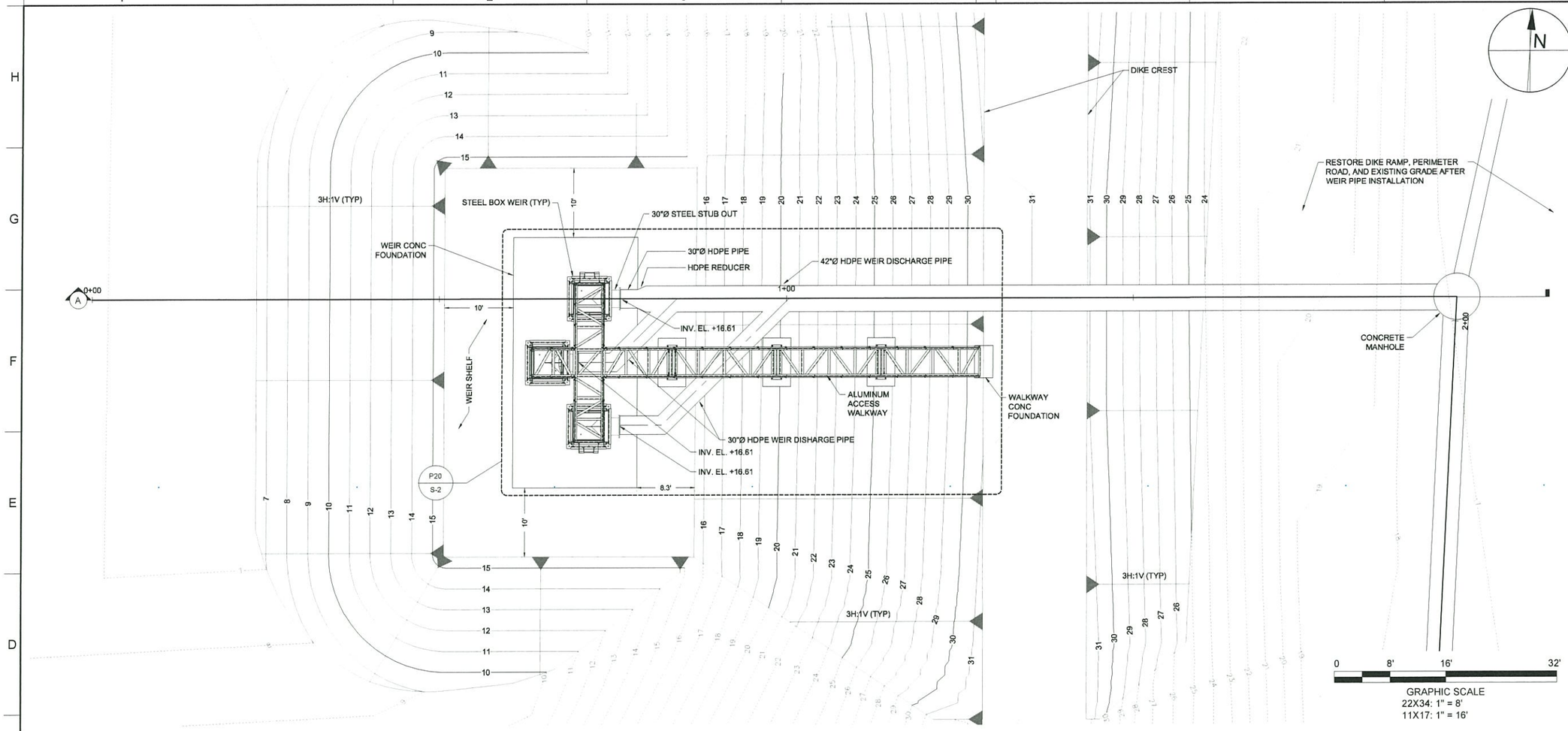

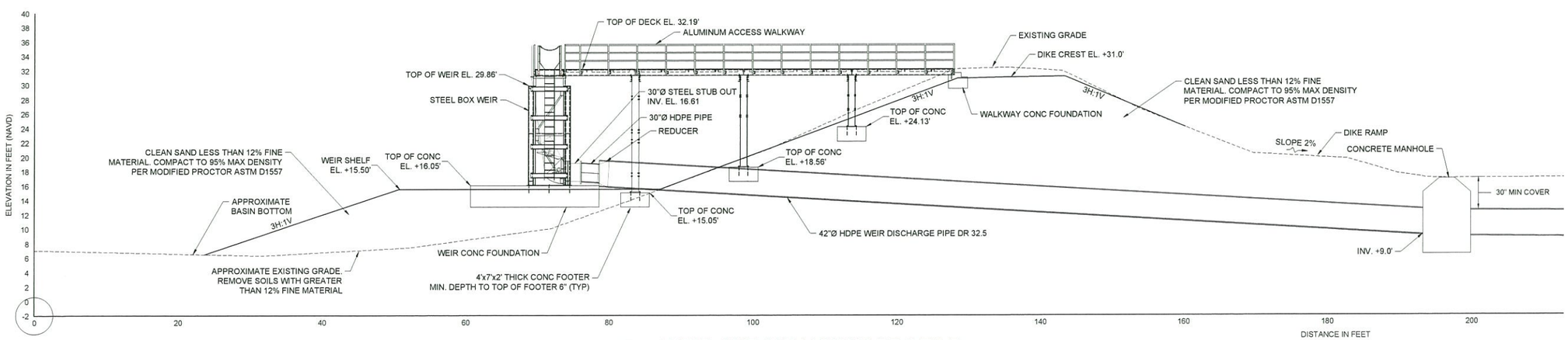

A WEIR AND WALKWAY PROFILE

22x34: 1" = 8'
11x17: 1" = 16'

0 8' 16'

TAYLOR ENGINEERING INC.
10151 DEERWOOD PARK BLVD
BLDG 300, SUITE 300
JACKSONVILLE FLORIDA 32256
(904) 731-7040
221 AIRPORT ROAD
SUITE 210
DESTIN, FL 32541
(850) 486-7040
CERTIFICATE OF AUTHORIZATION # 4875

SEAL: LICENSED KEITH A. KNIGHT No. 58084 STATE OF FLORIDA PROFESSIONAL ENGINEER

2-5-18

KEITH A. KNIGHT P.E. #58084

PROJECT TITLE

DREDGED MATERIAL MANAGEMENT AREA BV-52 WEIR, WALKWAY, AND PIPELINE REPLACEMENT
BREVARD COUNTY, FLORIDA

SUNSHINE STATE ONE CALL OF FLORIDA
SUNSHINE 811 - ALWAYS CALL 811
BEFORE YOU DIG
1-800-638-4097

NO	ZONE	REVISIONS / SUBMISSIONS	DATE

PROJECT NO	C2017-029
DATE	AUG 2018
DESIGNED	RJD
DRAWN	AF
CHECKED	RMD
REVIEWED	KAK
SCALE	AS SHOWN

DRAWING TITLE

WEIR PLAN AND PROFILE

S-1

SHEET 5 OF 15

ANTON FLEWELLING, 8/8/2018 11:37:22 AM, X:\sys\Projects\2017-029_BV52\Construction\Weir plan profile.dwg

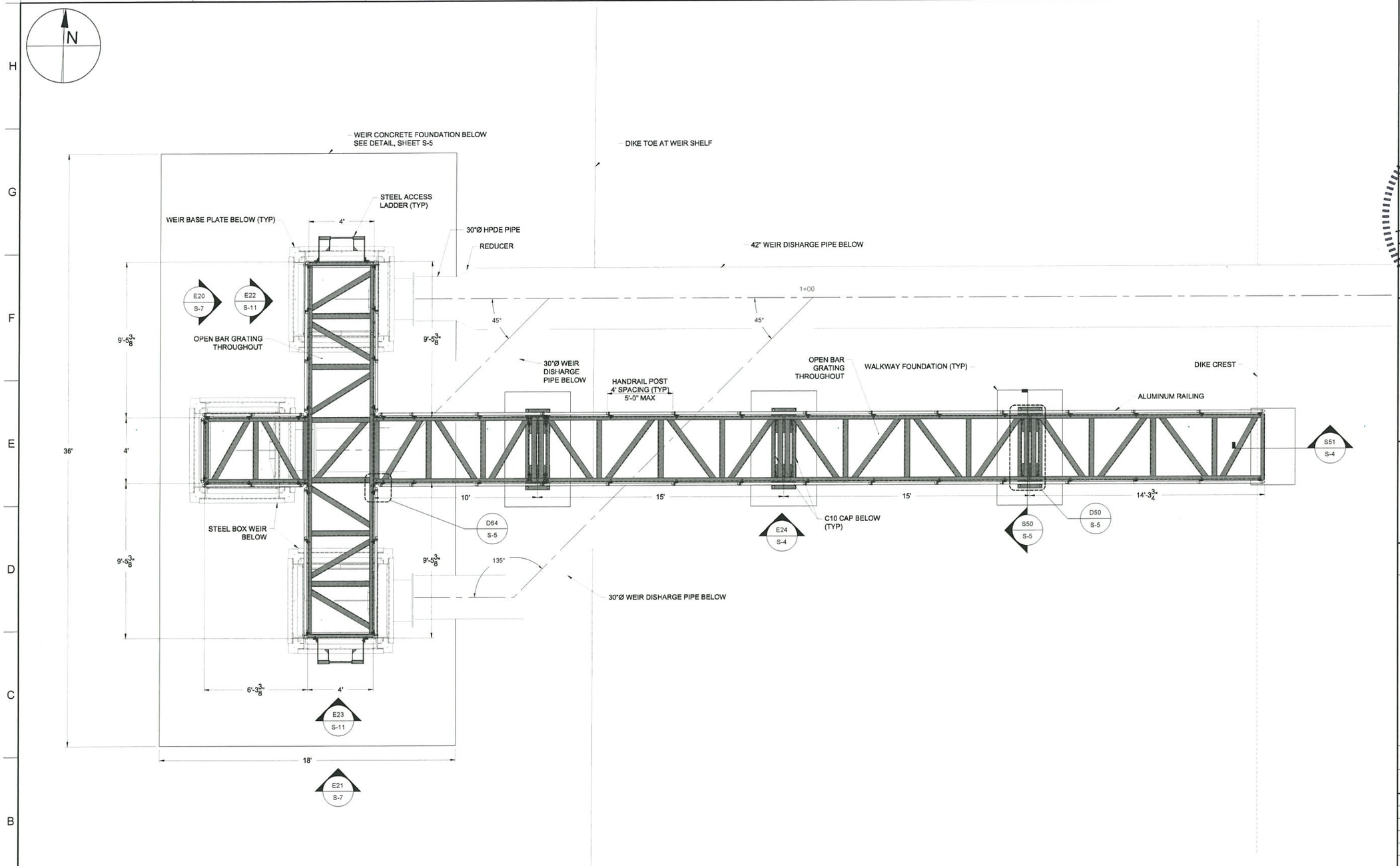

P20
S-1

WEIR WALKWAY PLAN

22x34: 1" = 3'
11x17: 1" = 6'

0 3' 6'

NOTES:
1. BAR GRATING SHALL BE TYPE 6063-T6 ALUMINUM WITH GROOVED SURFACE.
2. GRATING SHALL BE 2-FT WIDE WITH 2 SECTIONS PLACED SIDE BY SIDE AND FASTENED TO STRUCTURE PER MANUFACTURER'S GUIDELINES.
3. GRATING SHALL HAVE A MINIMUM SAFE WORKING LOAD OF 60 PSF AT A 3.75-FT SPAN.
4. ALL BOLTED CONNECTIONS SHALL BE SNUG-TIGHT U.N.O.
5. BOLTS SHALL BE H.D.G. STEEL U.N.O.
6. SEE SPECIFICATION 33.40.00 FOR FURTHER REQUIREMENTS.

TAYLOR ENGINEERING INC.
10151 DEERWOOD PARK BLVD
BLDG 300, SUITE 300
JACKSONVILLE, FLORIDA 32256
904.731.7040
1221 AIRPORT ROAD
SUITE 210
DESTIN, FL 32541
(850) 424-2040
CERTIFICATE OF AUTHORIZATION # 4772

SEAL
K. A. KNIGHT
No 58084
STATE OF FLORIDA
PROFESSIONAL ENGINEER
KEITH A. KNIGHT PE#58084

PROJECT TITLE

DREDGED MATERIAL MANAGEMENT AREA BV-52 WEIR, WALKWAY, AND PIPELINE REPLACEMENT
BREVARD COUNTY, FLORIDA

SUNSHINE STATE ONE CALL OF FLORIDA
SUNSHINE 811 - ALWAYS CALL 811 BEFORE YOU DIG
1-800-638-4097

NO	ZONE	REVISIONS / SUBMISSIONS	DATE

PROJECT NO	C2017-029
DATE	AUG 2018
DESIGNED	RJD
DRAWN	AF
CHECKED	RMD
REVIEWED	KAK
SCALE	AS SHOWN

DRAWING TITLE

ALUMINUM WALKWAY PLAN

S-2

SHEET 6 OF 15

ANTON FLEMELLING, 8/8/2018 11:37:40 AM, X:\sys\Projects\C2017-029_BV52\Construction\Weir Walkway Plan.dwg

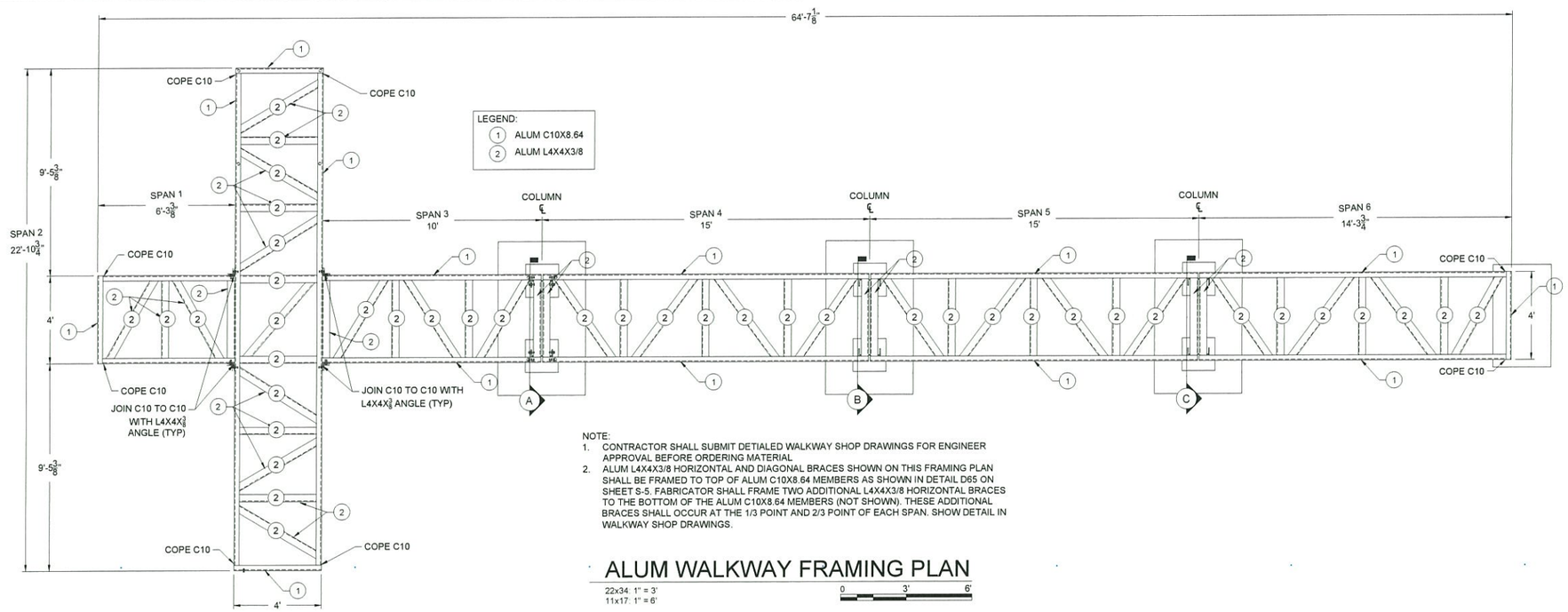

NOTE:
1. CONTRACTOR SHALL SUBMIT DETIALED WALKWAY SHOP DRAWINGS FOR ENGINEER APPROVAL BEFORE ORDERING MATERIAL
2. ALUM L4X4X3/8 HORIZONTAL AND DIAGONAL BRACES SHOWN ON THIS FRAMING PLAN SHALL BE FRAMED TO TOP OF ALUM C10X8.64 MEMBERS AS SHOWN IN DETAIL D65 ON SHEET S-5. FABRICATOR SHALL FRAME TWO ADDITIONAL L4X4X3/8 HORIZONTAL BRACES TO THE BOTTOM OF THE ALUM C10X8.64 MEMBERS (NOT SHOWN). THESE ADDITIONAL BRACES SHALL OCCUR AT THE 1/3 POINT AND 2/3 POINT OF EACH SPAN. SHOW DETAIL IN WALKWAY SHOP DRAWINGS.

ALUM WALKWAY FRAMING PLAN

22x34: 1" = 3'
11x17: 1" = 6'

0 3' 6'

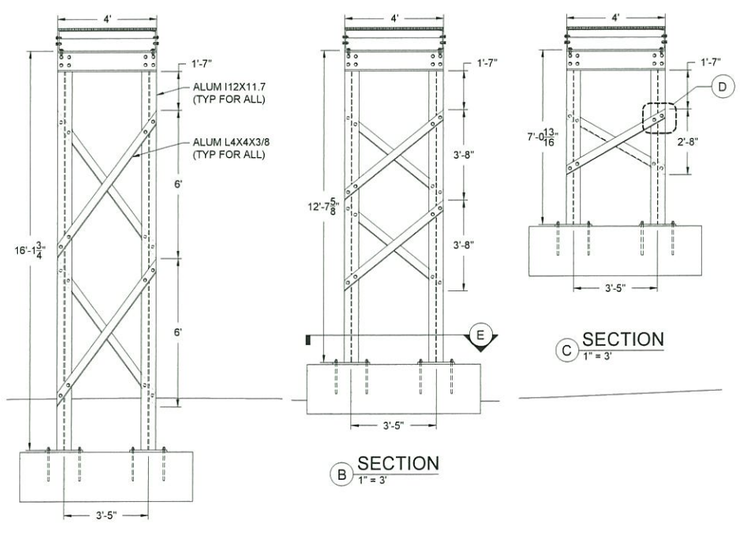

A SECTION 1" = 3'

B SECTION 1" = 3'

C SECTION 1" = 3'

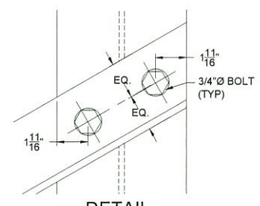

D DETAIL 3" = 1'

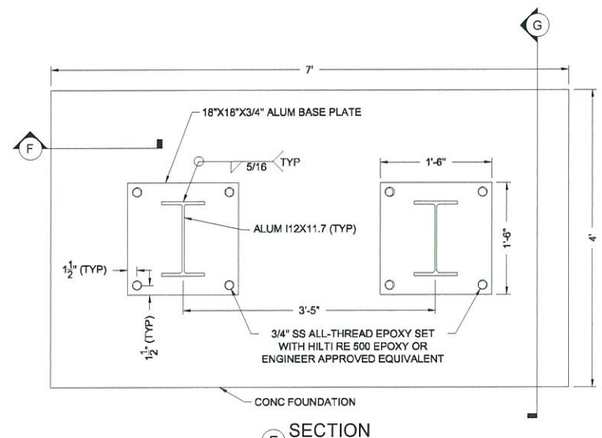

E SECTION 1" = 1'

NOTE:
CONTRACTOR SHALL HAVE THE OPTION OF PER-CASTING WALKWAY FOOTINGS AT PROJECT SITE

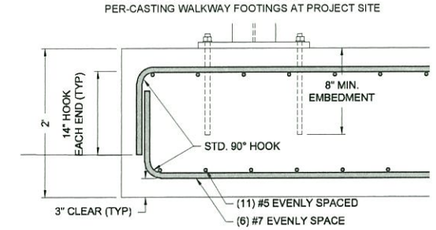

F SECTION 1" = 1'

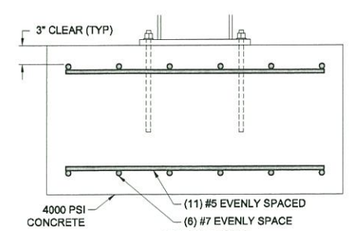

G SECTION 1" = 1'

ALUM WALKWAY PILE BRACING DETAILS

22x34: 1" = 3'
11x17: 1" = 6'

0 3' 6'

TAYLOR ENGINEERING INC.
10151 DEERWOOD PARK BLVD
BLDG 300, SUITE 300
JACKSONVILLE, FLORIDA 32256
(904) 731-7040
1251 AIRPORT ROAD
SUITE 210
DESTIN, FL 32541
(850) 460-7040
CERTIFICATE OF AUTHORIZATION 4908

SEAL: No 58084 STATE OF FLORIDA PROFESSIONAL ENGINEER K. KNIGHT

KEITH A. KNIGHT P.E. #58084

PROJECT TITLE

DREDGED MATERIAL MANAGEMENT AREA BV-52 WEIR, WALKWAY, AND PIPELINE REPLACEMENT
BREVARD COUNTY, FLORIDA

SUNSHINE STATE ONE CALL OF FLORIDA
SUNSHINE 811 - ALWAYS CALL 811 BEFORE YOU DIG
1-800-638-4097

NO	ZONE	REVISIONS / SUBMISSIONS	DATE

PROJECT NO	C2017-029
DATE	AUG 2018
DESIGNED	RJD
DRAWN	AF
CHECKED	RMD
REVIEWED	KAK
SCALE	AS SHOWN

DRAWING TITLE
ALUMINUM WALKWAY FRAMING PLAN AND DETAILS

S-3

SHEET 7 OF 15

ANTON FLEMELLING, 8/8/2018 11:38:04 AM, X:\sys\Projects\c2017-029_BV52\Construction\Weir walkway Framing Plan.dwg

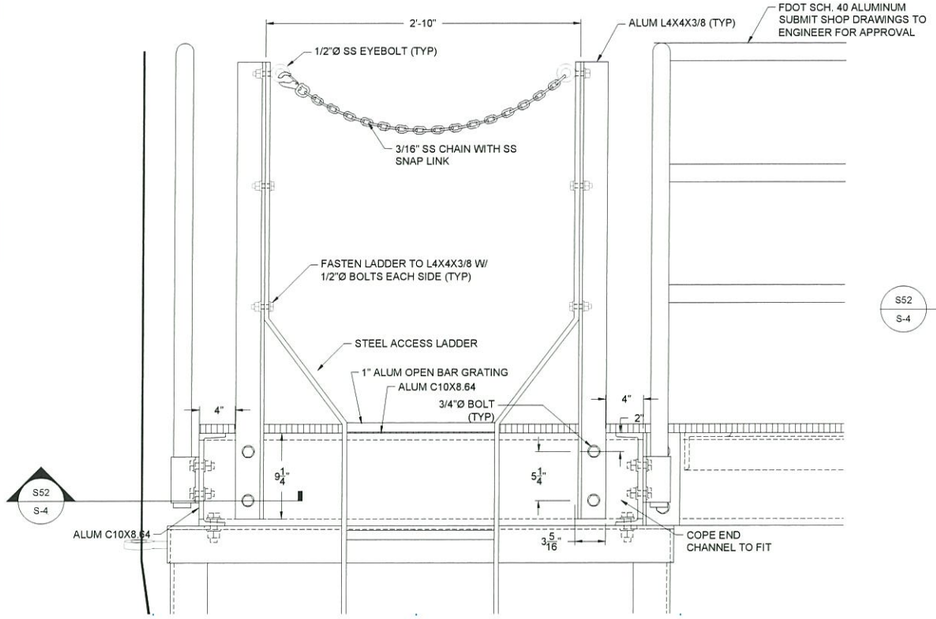

E26 / S-11 **WEIR LADDER TO WALKWAY CONNECTION SIDE ELEVATION**
22X34: 1 1/2" = 1'
11X17: 3/4" = 1'

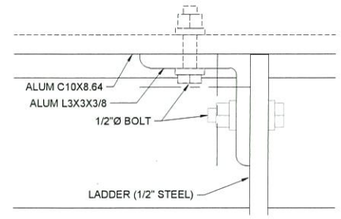

S52 / S-4 **STEEL TO JOIST CONNECTION LADDER SUPPORT TYPICAL SECTION**
22X34: 6" = 1'
11X17: 3" = 1'

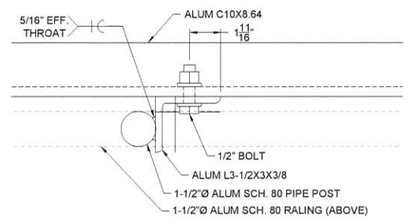

S59 / S-4 **RAILING MOUNT PLAN DETAIL**
22X34: 3" = 1'
11X17: 1 1/2" = 1'

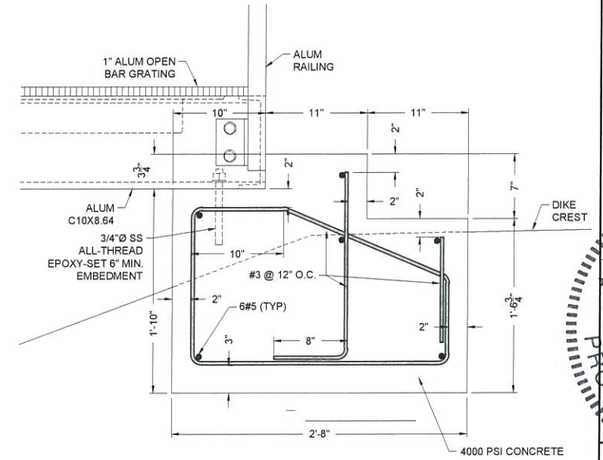

S51 / S-2 **WALKWAY CONCRETE FOOTER SECTION**
22X34: 1 1/2" = 1'
11X17: 3/4" = 1'

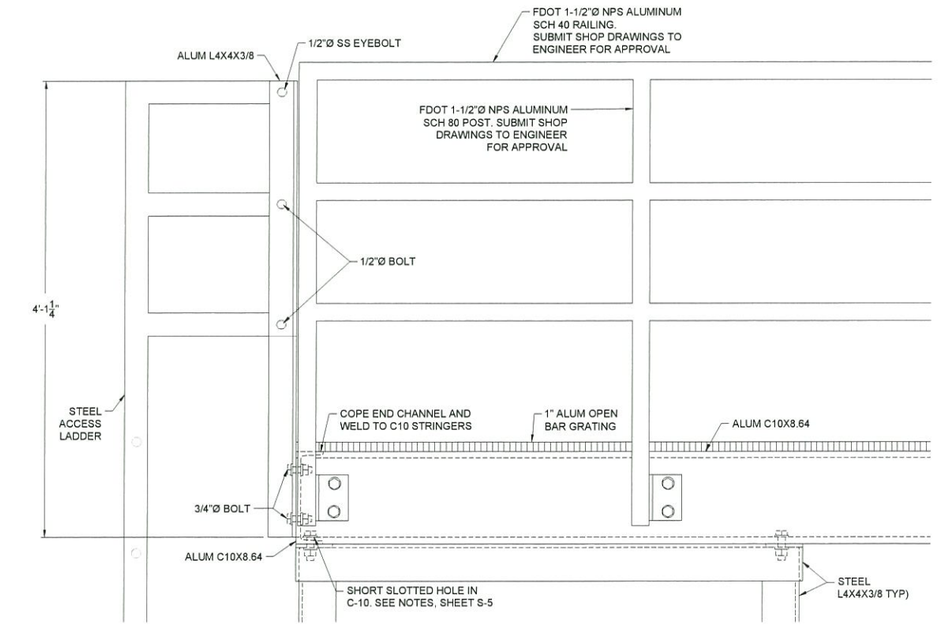

E25 / S-11 **WEIR LADDER TO WALKWAY CONNECTION FRONT ELEVATION**
22X34: 1 1/2" = 1'
11X17: 3/4" = 1'

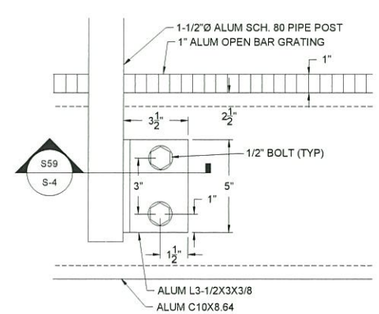

D63 / S-4 **RAILING MOUNT FRONT DETAIL**
22X34: 3" = 1'
11X17: 1 1/2" = 1'

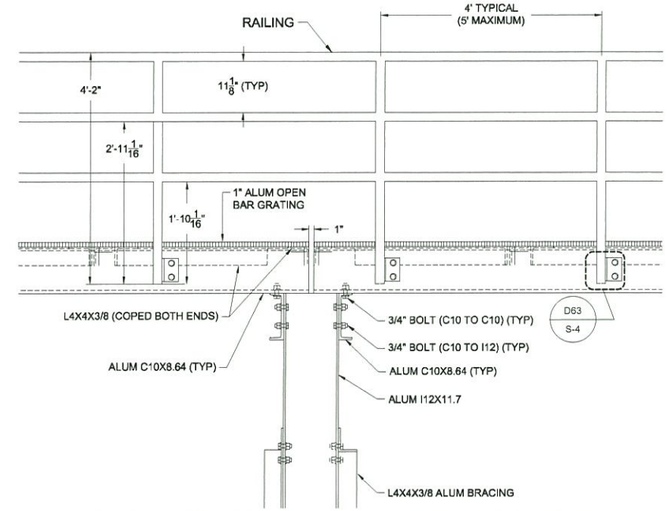

E24 / S-2 **PILE CAP & WALKWAY DETAIL ELEVATION**
22X34: 3/4" = 1'
11X17: 3/8" = 1'

TAYLOR ENGINEERING INC.
10151 DEERWOOD PARK BLVD
BLDG 300, SUITE 300
JACKSONVILLE, FLORIDA 32256
(904) 731-7040
11221 AIRPORT ROAD
SUITE 210
DESTIN, FL 32541
(850) 837-7040
CERTIFICATE OF AUTHORIZATION # 8815

SEAL
K. A. KNIGHT
No 58084
STATE OF FLORIDA
PROFESSIONAL ENGINEER
8-8-18

KEITH A. KNIGHT P.E. # 58084

PROJECT TITLE

DREDGED MATERIAL MANAGEMENT AREA BV-52 WEIR, WALKWAY, AND PIPELINE REPLACEMENT
BREVARD COUNTY, FLORIDA

SUNSHINE STATE ONE CALL OF FLORIDA
SUNSHINE 811 - ALWAYS CALL 811 BEFORE YOU DIG
1-800-638-4097

NO	ZONE	REVISIONS / SUBMISSIONS	DATE

PROJECT NO	C2017-029
DATE	AUG 2018
DESIGNED	RJD
DRAWN	AF
CHECKED	RMD
REVIEWED	KAK
SCALE	AS SHOWN

DRAWING TITLE

ALUMINUM WALKWAY DETAILS

S-4

SHEET 8 OF 15

ANTON FLEWELLING 8/8/2018 11:38:38 AM, X:\sys\Projects\c2017-029_BV52\Construction\Weir Details 1.dwg

NOTES:
1. WHERE SHORT SLOTTED HOLES ARE REQUIRED, BOLTS SHALL BE FINGER-TIGHT ONLY
2. SHORT SLOTTED HOLES SHALL HAVE A STANDARD NUT AND A JAM NUT TO KEEP THE FINGER-TIGHT CONNECTION FROM BACKING OFF
3. PLACE 2"X2"X3/16" THICK AASHTO-GRADE NEOPRENE BEARING PAD BETWEEN CONNECTING MEMBERS WHERE SHORT SLOTTED HOLES ARE REQUIRED
4. SET BOLT CENTER AT CENTER OF SHORT SLOTTED HOLES
5. LENGTH OF SHORT SLOTEED HOLES SHALL BE 1" U.N.O.

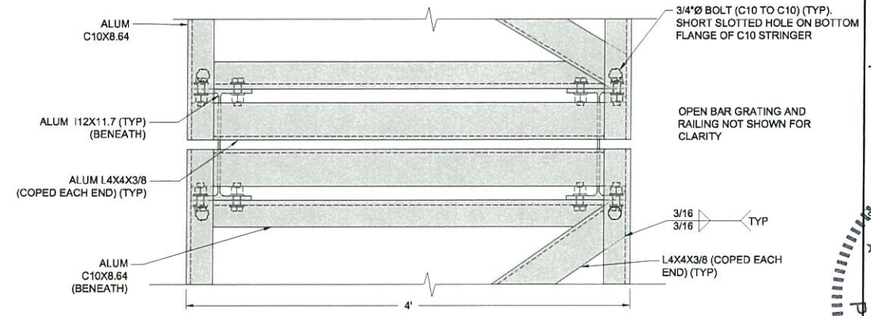

D50 / S-2 PILE CAP & JOINT PLAN DETAIL
22X34: 1 1/2" = 1'
11X17: 3/4" = 1'

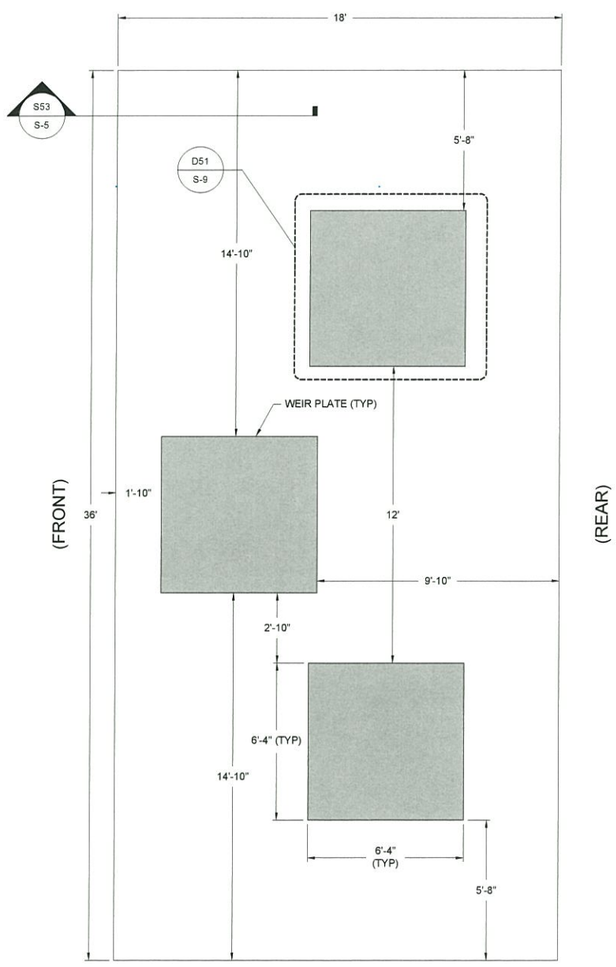

WEIR FOUNDATION PLAN
22x34: 1" = 3'
11x17: 1" = 6'

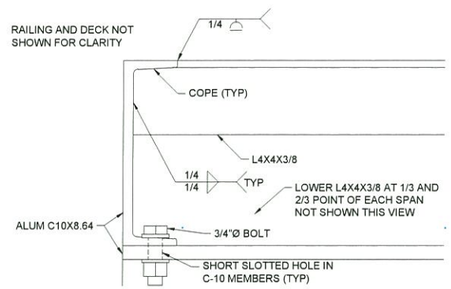

D65 / S-5 WALKWAY DETAIL
22X34: 3" = 1'
11X17: 1 1/2" = 1'

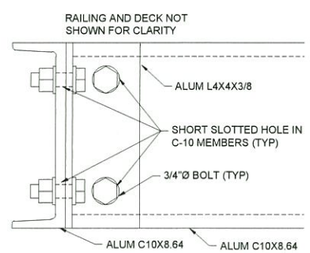

S60 / S-5 WALKWAY BEAM CONNECTION SECTION
22X34: 3" = 1'
11X17: 1 1/2" = 1'

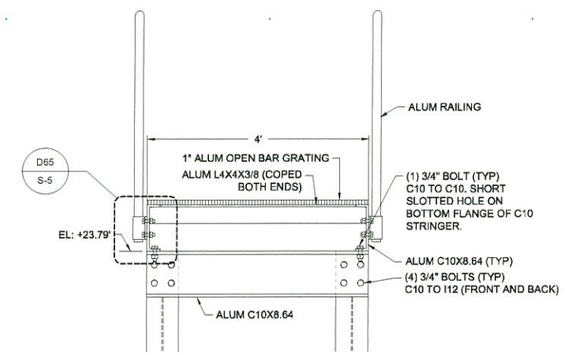

S50 / S-2 PILE CAP & WALKWAY DETAIL SECTION
22X34: 3/4" = 1'
11X17: 3/8" = 1'

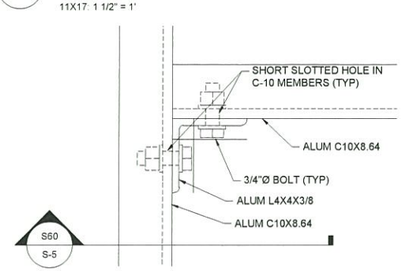

D64 / S-2 WALKWAY BEAM CONNECTION DETAIL
22X34: 3" = 1'
11X17: 1 1/2" = 1'

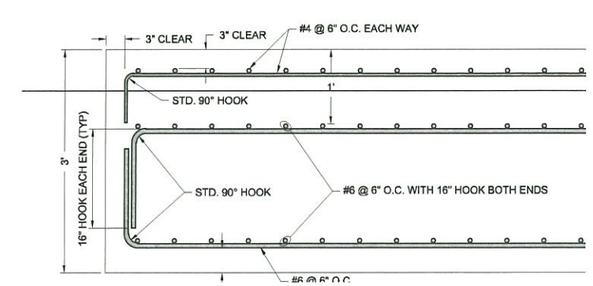

S53 / S-5 WEIR FOUNDATION REINFORCEMENT SECTION
22X34: 1" = 1'
11X17: 1/2" = 1'

TAYLOR ENGINEERING INC.
10151 DEERWOOD PARK BLVD
BLDG 300, SUITE 300
JACKSONVILLE, FLORIDA 32256
(904)-731-7040
1221 AIRPORT ROAD
SUITE 219
DESTIN, FL 32541
(850)-460-7040
CERTIFICATE OF AUTHORIZATION # 8186

SEAL
LICENSED PROFESSIONAL ENGINEER STATE OF FLORIDA No. 38084
6-8-18
KEITH A. KNIGHT FEB #38084

PROJECT TITLE
DREDGED MATERIAL MANAGEMENT AREA BV-52 WEIR, WALKWAY, AND PIPELINE REPLACEMENT
BREVARD COUNTY, FLORIDA

SUNSHINE STATE ONE CALL OF FLORIDA
SUNSHINE 811 - ALWAYS CALL 811 BEFORE YOU DIG
1-800-638-4097

NO	ZONE	REVISIONS / SUBMISSIONS	DATE

PROJECT NO	C2017-029
DATE	AUG 2018
DESIGNED	RJD
DRAWN	AF
CHECKED	RMD
REVIEWED	KAK
SCALE	AS SHOWN

DRAWING TITLE
ALUMINUM WALKWAY AND FOUNDATION DETAILS

S-5

SHEET 9 OF 15

ANTON FLEWELLING 8/8/2018 11:39:16 AM, X:\sys\Projects\c2017-029_BV52\Construction\Weir Details 2.dwg

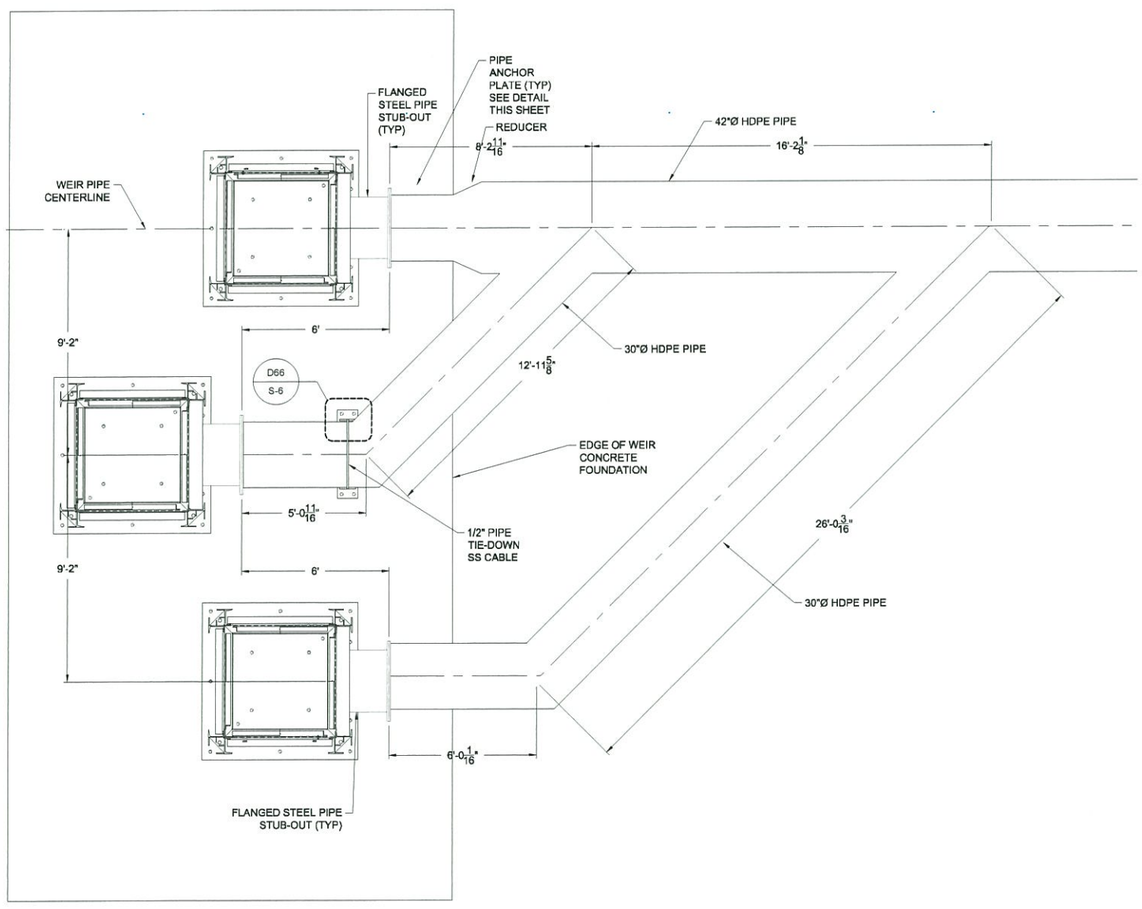

HDPE WEIR PIPE LAYOUT

22x34: 1" = 3'
11x17: 1" = 6'

0 3' 6'

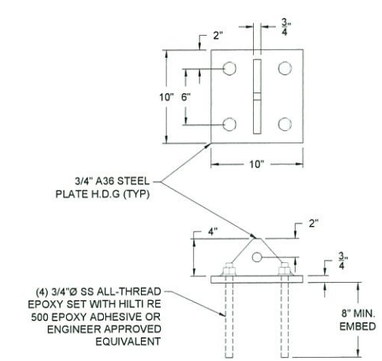

D66 S-6

PIPE ANCHOR PLATE

22X34: 1 1/2" = 1'
11X17: 3/4" = 1'

0 1/2' 1'

TAYLOR ENGINEERING INC.
10151 DEERWOOD PARK BLVD
BLDG 300, SUITE 300
JACKSONVILLE, FLORIDA 32256
(904)-731-7040
1221 AIRPORT ROAD
SUITE 210
DESTIN FL 32541
(850)-460-7040
CERTIFICATE OF AUTHORIZATION # 8176

SEAL

KEITH A. KNIGHT
LICENSE No. 58084
STATE OF FLORIDA
PROFESSIONAL ENGINEER

KEITH A. KNIGHT P.E.# 58084

PROJECT TITLE

DREDGED MATERIAL MANAGEMENT AREA BV-52 WEIR, WALKWAY, AND PIPELINE REPLACEMENT

BREVARD COUNTY, FLORIDA

SUNSHINE STATE ONE CALL OF FLORIDA
SUNSHINE 811 - ALWAYS CALL 811 BEFORE YOU DIG
1-800-638-4097

NO	ZONE	REVISIONS / SUBMISSIONS	DATE

PROJECT NO	C2017-029
DATE	AUG 2018
DESIGNED	RJD
DRAWN	AF
CHECKED	RMD
REVIEWED	KAK
SCALE	AS SHOWN

DRAWING TITLE

WEIR FOUNDATION DETAILS

S-6

SHEET 10 OF 15

ANTON FLEVELLING, 8/8/2018 11:39:56 AM, X:\cpy\Projects\C2017-029_BV52\Construction\Weir Details 3.dwg

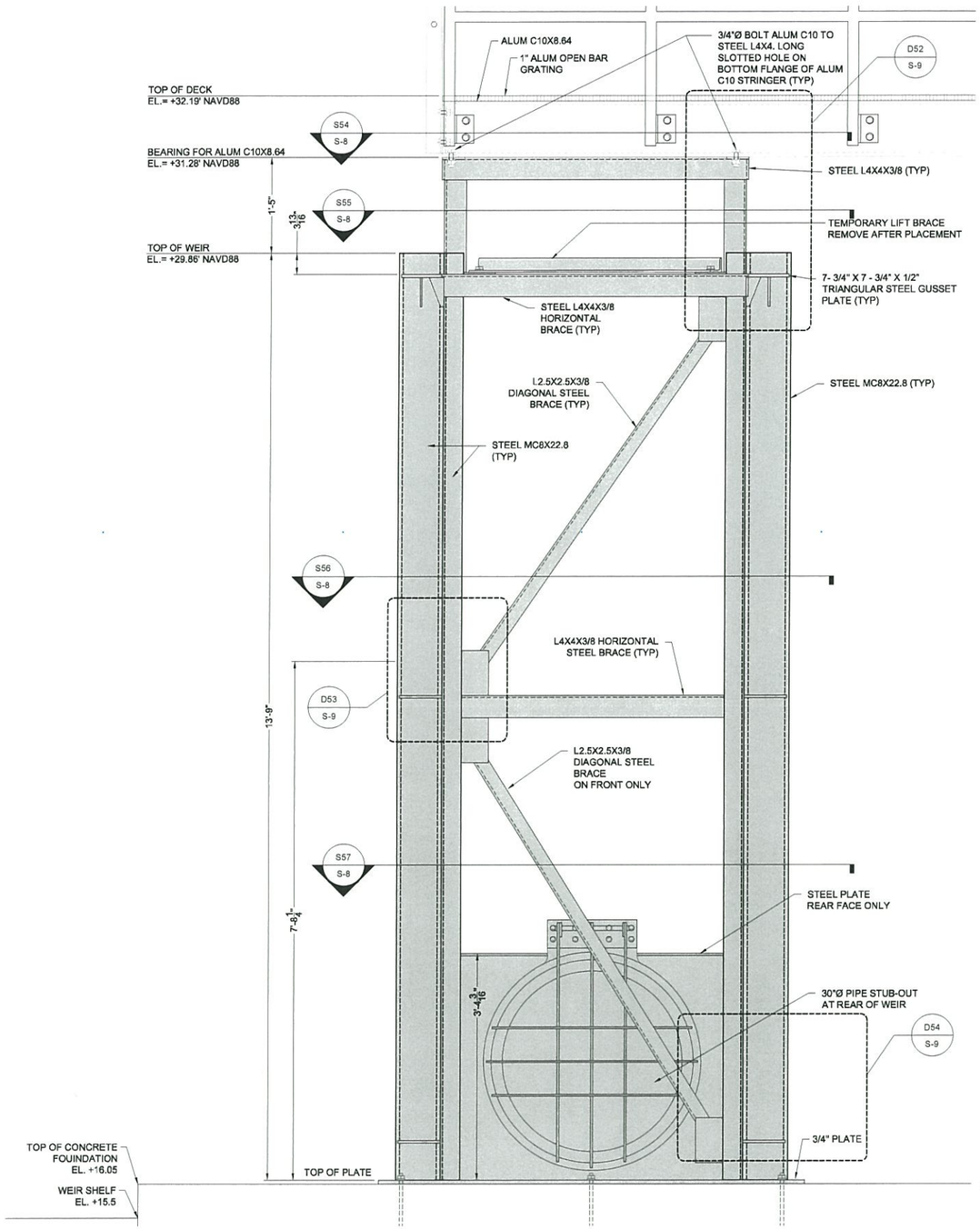

E20 / S-2 **WEIR FRONT TYPICAL ELEVATION**

22X34: 1" = 1'
11X17: 1/2" = 1'

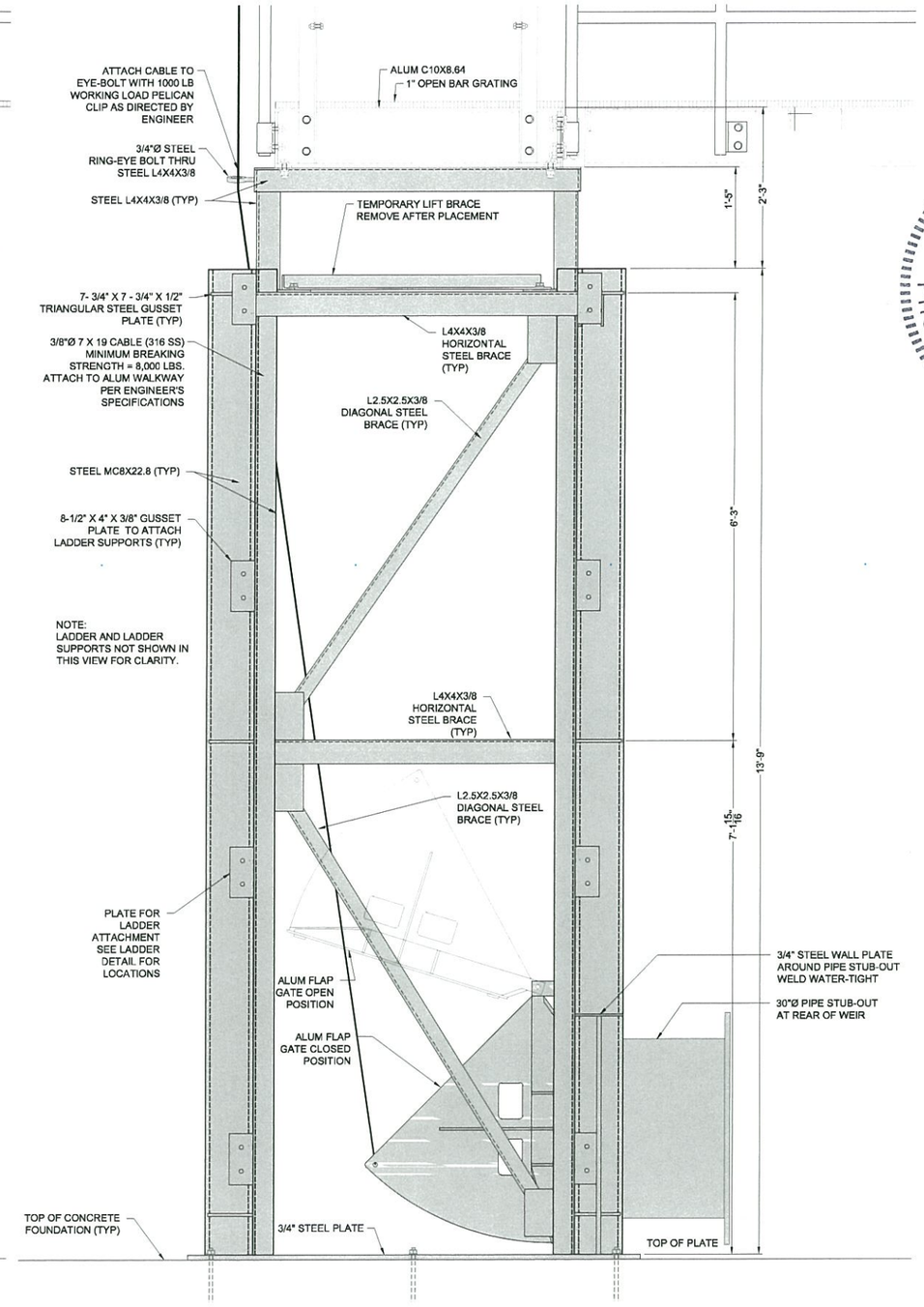

E21 / S-2 **WEIR SIDE TYPICAL ELEVATION**

22X34: 1" = 1'
11X17: 1/2" = 1'

TAYLOR ENGINEERING INC.
10151 DEERWOOD PARK BLVD
BLDG 300, SUITE 300
JACKSONVILLE, FLORIDA 32256
(904)-731-7040
1221 AIRPORT ROAD
SUITE 210
DESTIN, FL 32541
(850)-837-7040
CERTIFICATE OF AUTHORIZATION # 8768

SEAL

KEITH A. KNIGHT
LICENSE No 58084
5-8-18
STATE OF FLORIDA
PROFESSIONAL ENGINEER

KEITH A. KNIGHT PE # 58084

PROJECT TITLE

DREDGED MATERIAL MANAGEMENT AREA BV-52 WEIR, WALKWAY, AND PIPELINE REPLACEMENT
BREVARD COUNTY, FLORIDA

SUNSHINE STATE ONE CALL OF FLORIDA
SUNSHINE 811 - ALWAYS CALL 811 BEFORE YOU DIG
1-800-638-4097

NO	ZONE	REVISIONS / SUBMISSIONS	DATE

PROJECT NO	C2017-029
DATE	AUG 2018
DESIGNED	RJD
DRAWN	AF
CHECKED	RMD
REVIEWED	KAK
SCALE	AS SHOWN

DRAWING TITLE

STEEL WEIR ELEVATIONS

S-7

SHEET 11 OF 15

ANTON FLEVELLING, 8/8/2018 11:40:11 AM, X:\sys\Projects\c2017-029_BV52\Construction\Weir Details 4.dwg

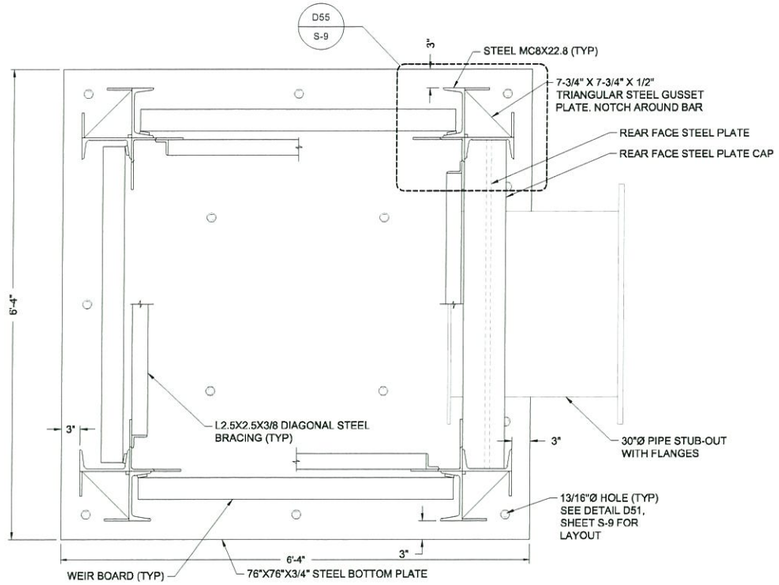

S57 / S-7 **LOWER WEIR SECTION**
22X34: 1" = 1'
11X17: 1/2" = 1'
0 1' 2'

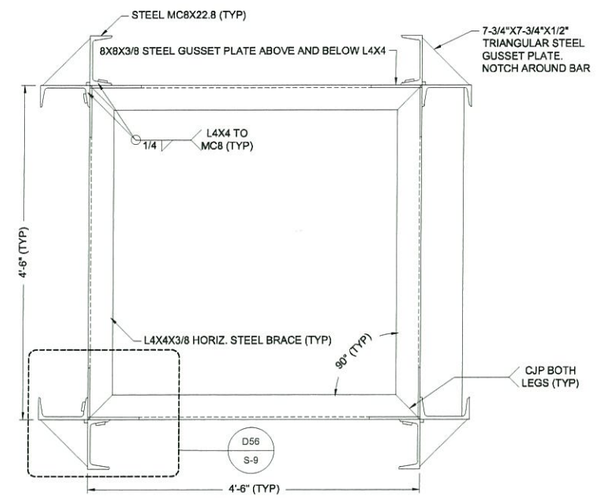

S56 / S-7 **MIDDLE WEIR SECTION**
22X34: 1" = 1'
11X17: 1/2" = 1'
0 1' 2'

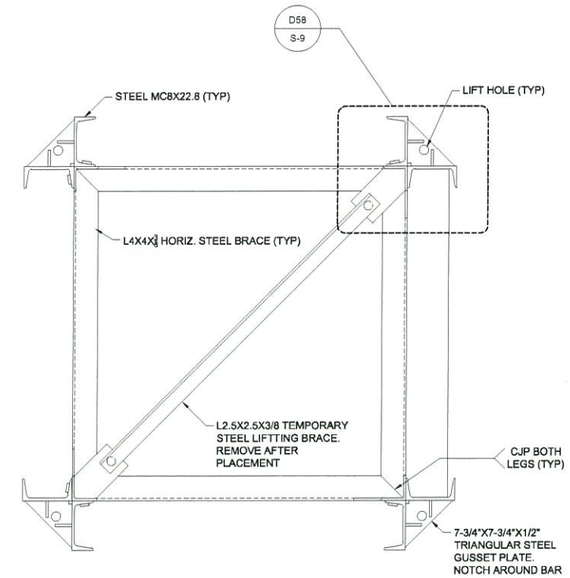

S55 / S-7 **UPPER WEIR SECTION**
22X34: 1" = 1'
11X17: 1/2" = 1'
0 1' 2'

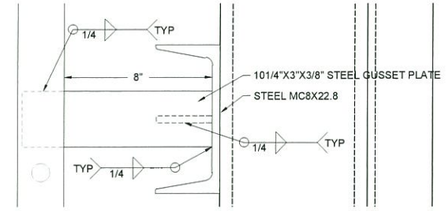

D62 / S-11 **TYPICAL LADDER SUPPORT DETAIL**
22X34: 3" = 1'
11X17: 1 1/2" = 1'
0 3' 6'

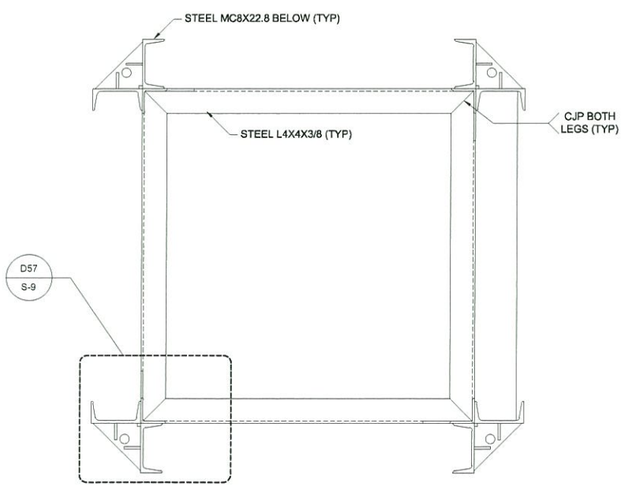

S54 / S-7 **TOP WEIR SECTION**
22X34: 1" = 1'
11X17: 1/2" = 1'
0 1' 2'

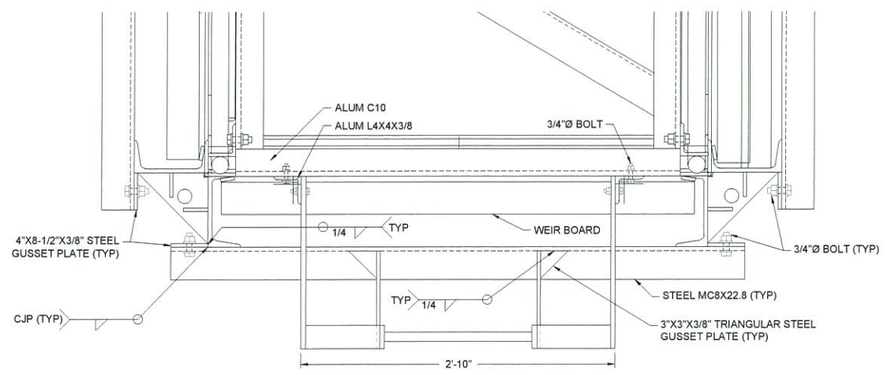

S58 / S-11 **WEIR LADDER TYPICAL PLAN**
22X34: 1 1/2" = 1'
11X17: 3/4" = 1'
0 1/2' 1'

TAYLOR ENGINEERING INC.
10151 DEERWOOD PARK BLVD
BLDG 300, SUITE 300
JACKSONVILLE, FLORIDA 32256
(904)-731-7040
1221 AIRPORT ROAD
SUITE 210
DESTIN, FL 32541
(850)-460-7040
CERTIFICATE OF AUTHORIZATION # 4815

SEAL

KEITH A. KNIGHT LICENSE No 58084 STATE OF FLORIDA PROFESSIONAL ENGINEER

KEITH A. KNIGHT, P.E. # 58084

PROJECT TITLE

DREDGED MATERIAL MANAGEMENT AREA BV-52 WEIR, WALKWAY, AND PIPELINE REPLACEMENT
BREVARD COUNTY, FLORIDA

SUNSHINE STATE ONE CALL OF FLORIDA
SUNSHINE 811 - ALWAYS CALL 811 BEFORE YOU DIG
1-800-638-4097

NO	ZONE	REVISIONS / SUBMISSIONS	DATE

PROJECT NO	C2017-029
DATE	AUG 2018
DESIGNED	RJD
DRAWN	AF
CHECKED	RMD
REVIEWED	KAK
SCALE	AS SHOWN

DRAWING TITLE

STEEL WEIR DETAILS

S-8

SHEET 12 OF 15

ANTON FLEWELLING, 8/8/2018 11:40:37 AM, X:\sys\Projects\2017-029_BV52\Construction\Weir Details 5.dwg

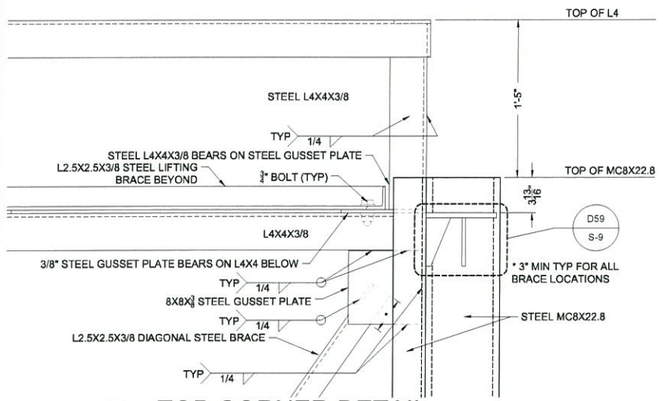

D52 S-7 TOP CORNER DETAIL
22X34: 1 1/2" = 1'
11X17: 3/4" = 1'
0 1/2' 1'

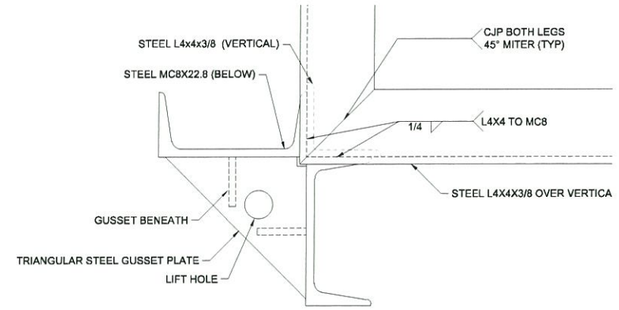

D57 S-8 TOP CORNER PLAN DETAIL
22X34: 3" = 1'
11X17: 1 1/2" = 1'
0 3' 6'

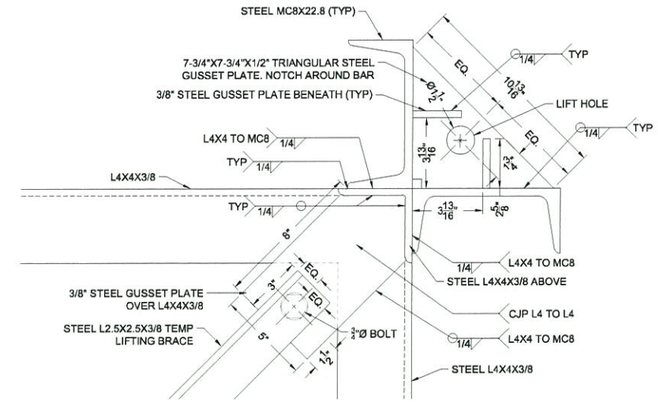

D58 S-8 CORNER DETAIL AT LIFT HOLE
22X34: 3" = 1'
11X17: 1 1/2" = 1'
0 3' 6'

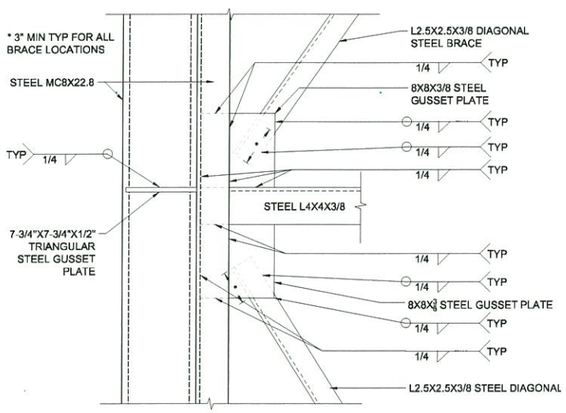

D53 S-7 MID-SECTION DETAIL
22X34: 1 1/2" = 1'
11X17: 3/4" = 1'
0 1/2' 1'

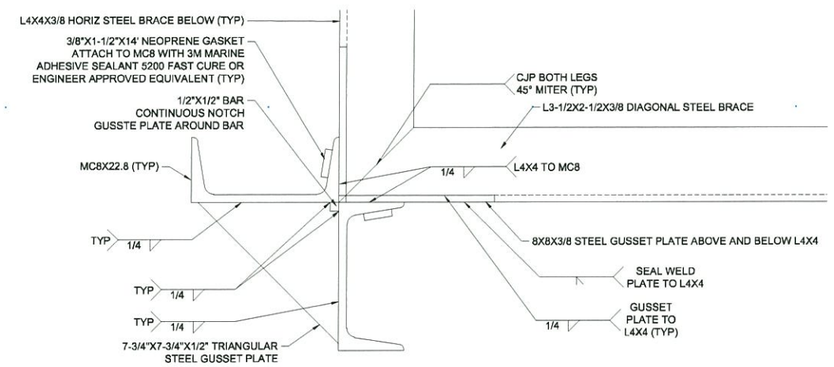

D56 S-8 MID-SECTION PLAN DETAIL
22X34: 3" = 1'
11X17: 1 1/2" = 1'
0 3' 6'

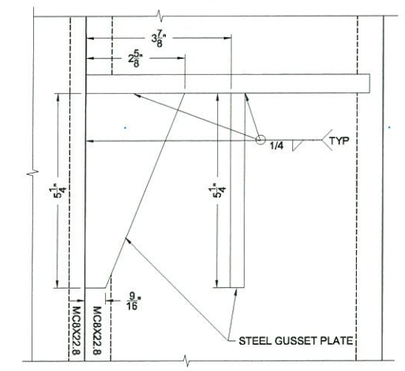

D59 S-9 GUSSET PLATE DETAIL
22X34: 6" = 1'
11X17: 3" = 1'
0 2' 3'

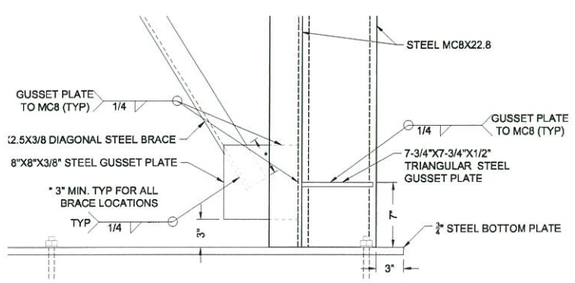

D54 S-7 BOTTOM CORNER DETAIL
22X34: 1 1/2" = 1'
11X17: 3/4" = 1'
0 1/2' 1'

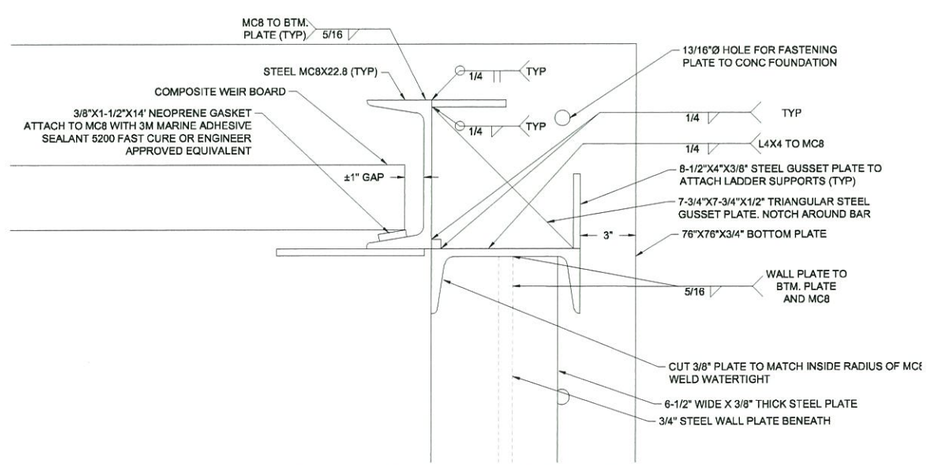

D55 S-8 BOTTOM CORNER PLAN DETAIL
22X34: 3" = 1'
11X17: 1 1/2" = 1'
0 3' 6'

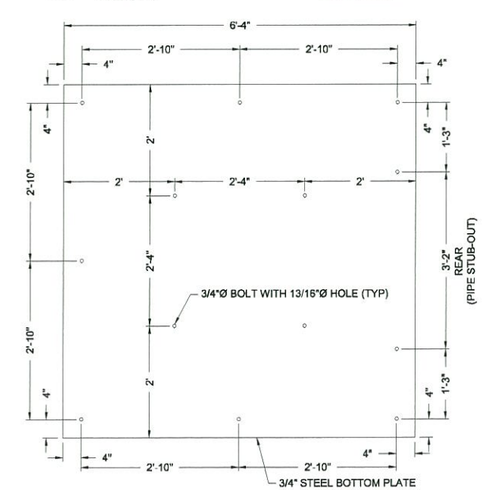

D51 S-5 WEIR PLATE & BOLT PLAN
22X34: 3/4" = 1'
11X17: 3/8" = 1'
0 1' 2'

TAYLOR ENGINEERING INC.
10151 DEERWOOD PARK BLVD
BLDG 300, SUITE 300
JACKSONVILLE, FLORIDA 32256
(904)-731-7040
1221 AIRPORT ROAD
SUITE 210
DESTIN, FL 32541
(850) 460-7040
CERTIFICATE OF AUTHORIZATION #8615

SEAL

KEVIN A. KNIGHT No 58084 STATE OF FLORIDA PROFESSIONAL ENGINEER

KEVIN A. KNIGHT P.E. # 58084

PROJECT TITLE

DREDGED MATERIAL MANAGEMENT AREA BV-52 WEIR, WALKWAY, AND PIPELINE REPLACEMENT
BREVARD COUNTY, FLORIDA

SUNSHINE STATE ONE CALL OF FLORIDA
SUNSHINE 811 - ALWAYS CALL 811 BEFORE YOU DIG
1-800-638-4097

NO	ZONE	REVISIONS / SUBMISSIONS	DATE

PROJECT NO	C2017-029
DATE	AUG 2018
DESIGNED	RJD
DRAWN	AF
CHECKED	RMD
REVIEWED	KAK
SCALE	AS SHOWN

DRAWING TITLE

STEEL WEIR DETAILS

S-9

SHEET 13 OF 15

ANTON FLEVELLING, 8/8/2018 11:41:02 AM, X:\sys\Projects\C2017-029_BV52\Construction\Weir Details 6.dwg

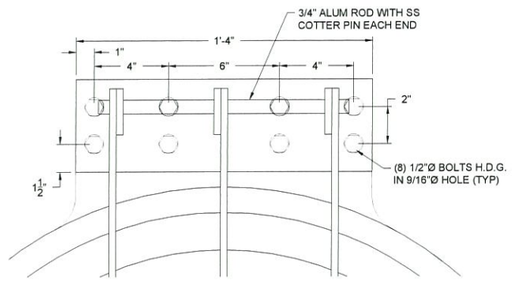

D61 / S-10 FLAP GATE HINGE MOUNT DETAIL

22X34: 3" = 1'
11X17: 1 1/2" = 1'

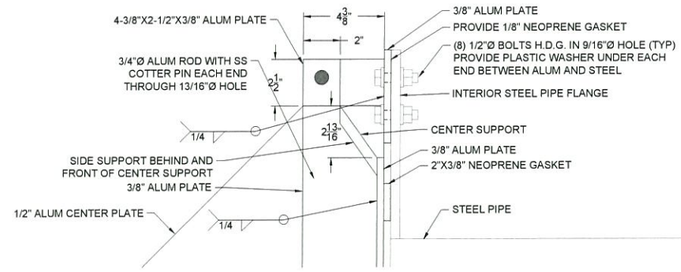

D60 / S-10 FLAP GATE HINGE MOUNT DETAIL SECTION

22X34: 3" = 1'
11X17: 1 1/2" = 1'

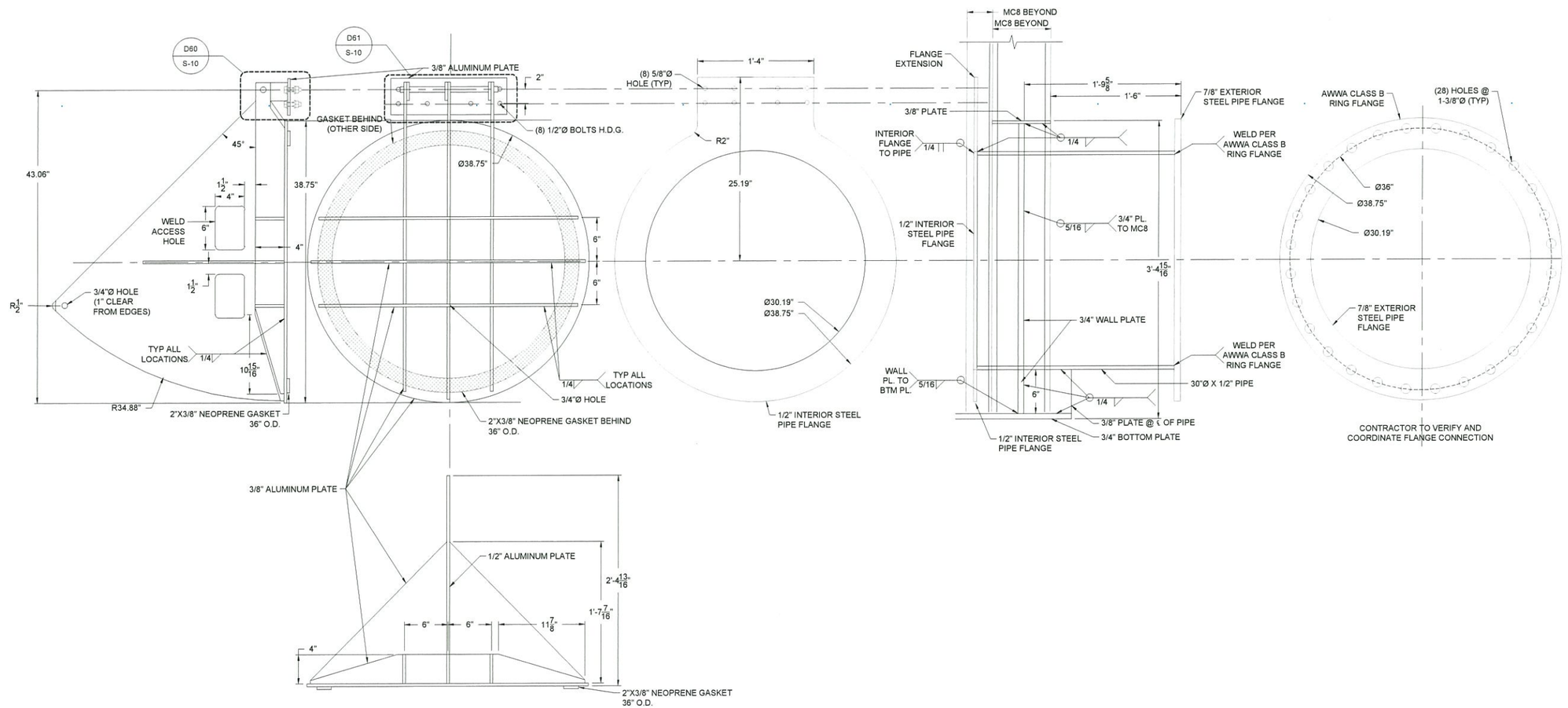

FLANGE AND FLAP GATE DETAILS

22X34: 1 1/2" = 1'
11X17: 3/4" = 1'

TAYLOR ENGINEERING INC.
10151 DEERWOOD PARK BLVD
BLDG 300, SUITE 300
JACKSONVILLE, FLORIDA 32256
(904)-731-7040
1221 AIRPORT ROAD
SUITE 2-D
DESTIN, FL 32541
(850)-460-7040
CERTIFICATE OF AUTHORIZATION # 8191

SEAL

LICENSED PROFESSIONAL ENGINEER STATE OF FLORIDA No. 58084

8-8-18

KEITH A. KNIGHT, P.E. # 58084

PROJECT TITLE

DREDGED MATERIAL MANAGEMENT AREA BV-52 WEIR, WALKWAY, AND PIPELINE REPLACEMENT
BREVARD COUNTY, FLORIDA

SUNSHINE STATE ONE CALL OF FLORIDA
SUNSHINE 811 - ALWAYS CALL 811 BEFORE YOU DIG
1-800-638-4097

NO	ZONE	REVISIONS / SUBMISSIONS	DATE

PROJECT NO	C2017-029
DATE	AUG 2018
DESIGNED	RJD
DRAWN	AF
CHECKED	RMD
REVIEWED	KAK
SCALE	AS SHOWN

DRAWING TITLE

STEEL WEIR AND ALUMINUM FLAP GATE DETAILS

S-10

SHEET 14 OF 15

ANTON FLEWELLING, 8/8/2018 11:41:12 AM, X:\sys\Projects\C2017-029_BV52\Construction\Weir Details 7.dwg

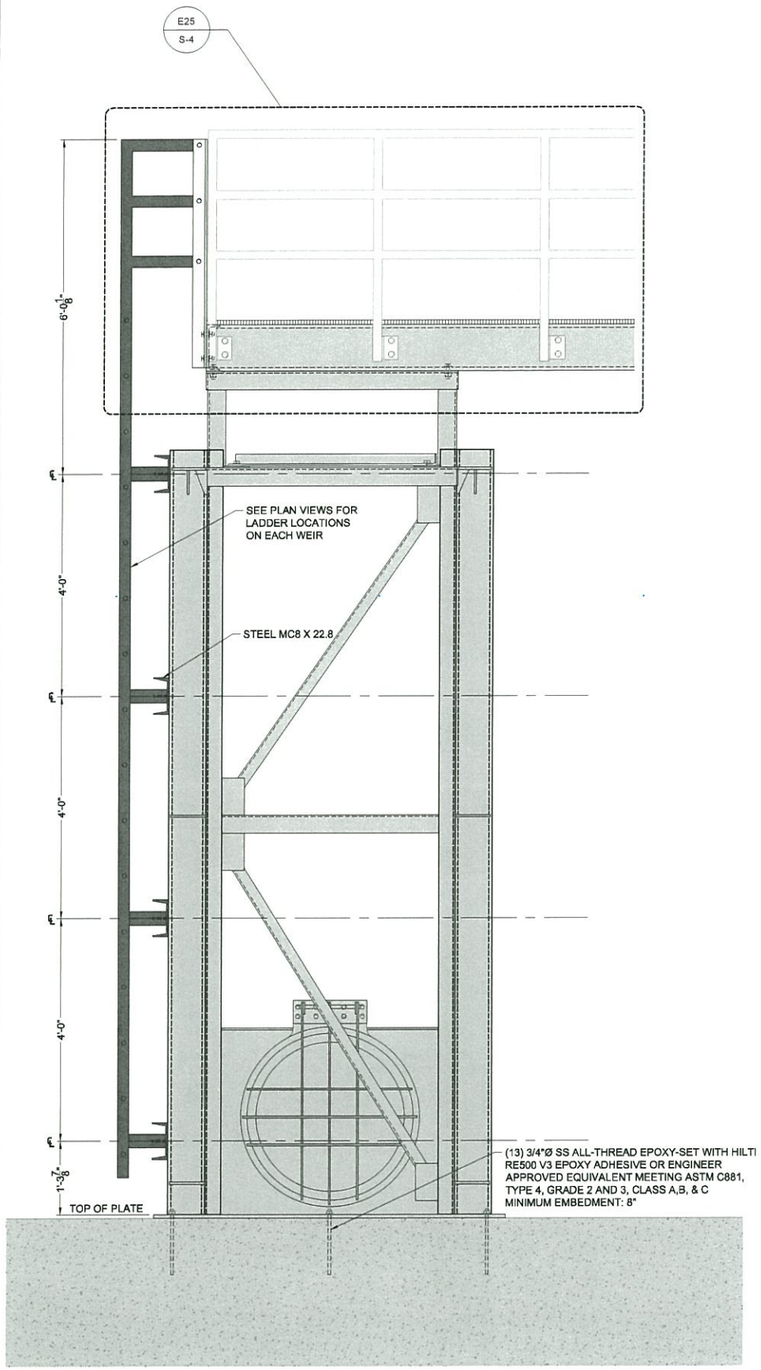

E22 S-2 WEIR LADDER FRONT ELEVATION

22X34: 3/4" = 1'
11X17: 3/8" = 1'

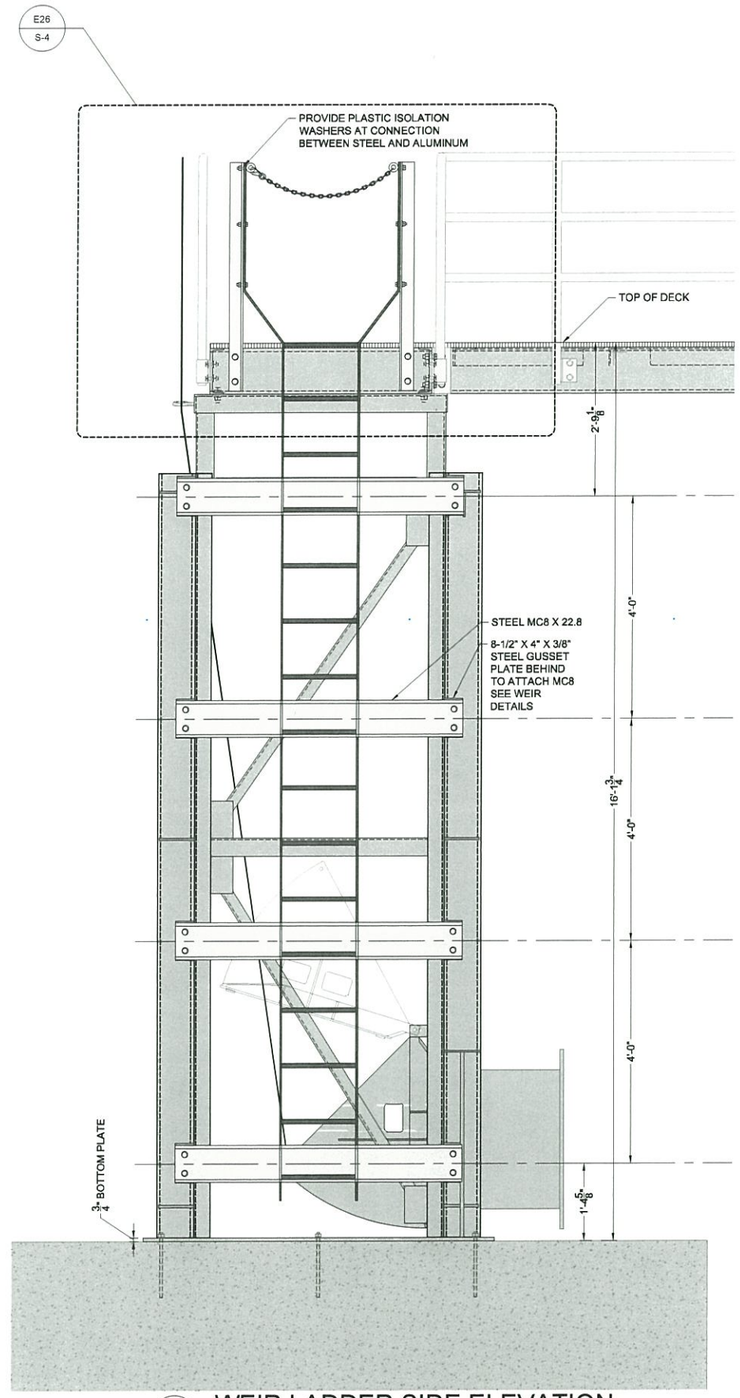

E23 S-2 WEIR LADDER SIDE ELEVATION

22X34: 3/4" = 1'
11X17: 3/8" = 1'

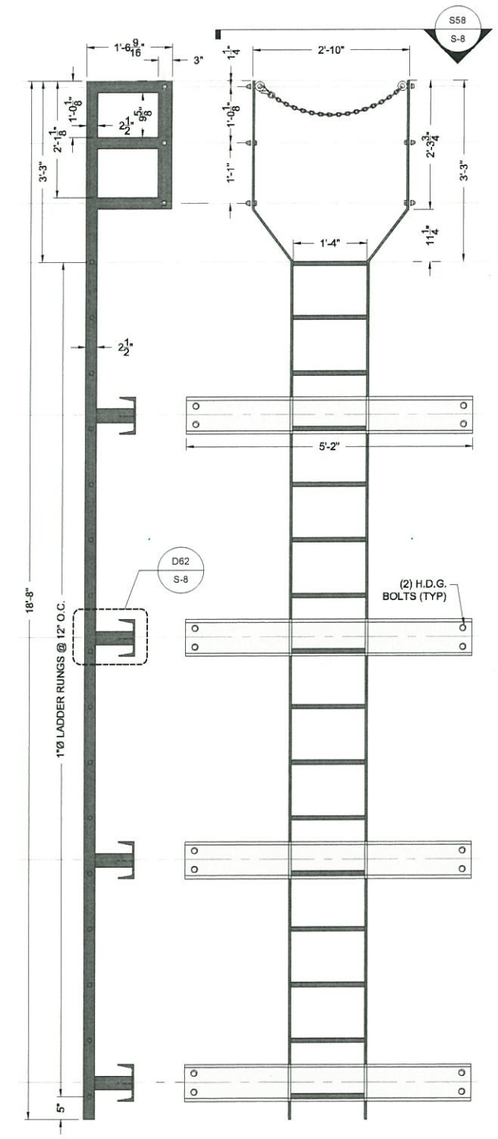

WEIR LADDER TYPICAL FRONT AND SIDE VIEW

22X34: 3/4" = 1'
11X17: 3/8" = 1'

TAYLOR ENGINEERING INC.
10151 DEERWOOD PARK BLVD
BLDG 300, SUITE 300
JACKSONVILLE, FLORIDA 32256
(904)-731-7040
1221 ARBOR ROAD
SUITE 210
DESTIN, FL 32541
(850)-460-7040
CERTIFICATE OF AUTHORIZATION #00000548

SEAL

LICENSED K. KNIGHT No 58084 8-8-18 STATE OF FLORIDA PROFESSIONAL ENGINEER

KEITH A. KNIGHT P.E. # 58084

PROJECT TITLE

DREDGED MATERIAL MANAGEMENT AREA BV-52 WEIR, WALKWAY, AND PIPELINE REPLACEMENT
BREVARD COUNTY, FLORIDA

SUNSHINE STATE ONE CALL OF FLORIDA
SUNSHINE 811 - ALWAYS CALL 811 BEFORE YOU DIG
1-800-638-4097

NO	ZONE	REVISIONS / SUBMISSIONS	DATE

PROJECT NO	C2017-029
DATE	AUG 2018
DESIGNED	RJD
DRAWN	AF
CHECKED	RMD
REVIEWED	KAK
SCALE	AS SHOWN

DRAWING TITLE

STEEL WEIR LADDER DETAILS

S-11

SHEET 15 OF 15

ANTON FLEWELLING, 8/8/2018 11:41:31 AM, X:\cpy\Projects\2017-029_BV52\Construction\Weir Details 8.dwg

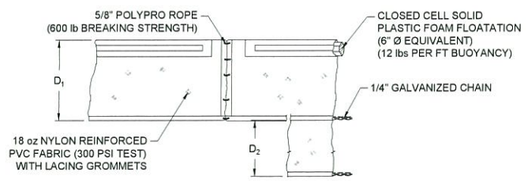

FLOATING TURBIDITY BARRIER - TYPE 1

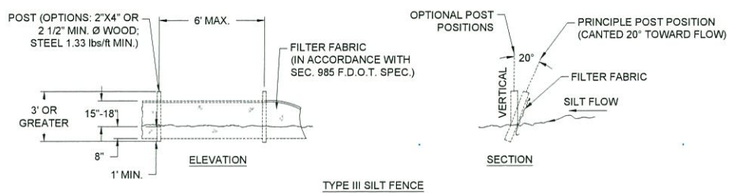

TYPE III SILT FENCE

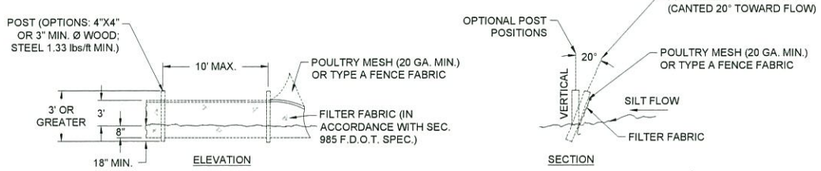

TYPE IV SILT FENCE

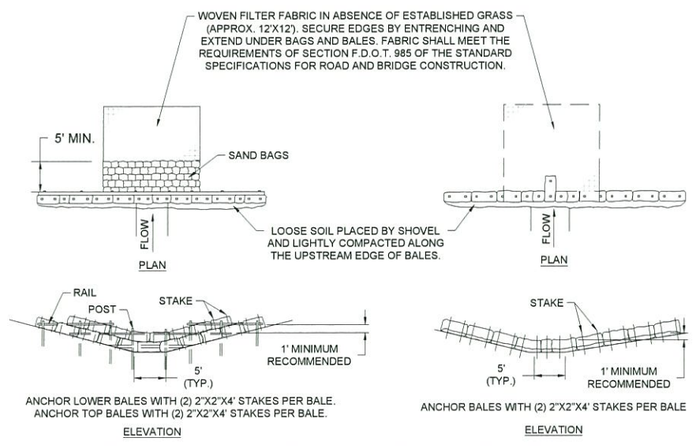

APPLICATION AND SPACING OF TYPES I & TYPES II HAY BALE BARRIERS SALL BE IN ACCORDANCE WITH SHEET 1 OF 3, F.D.O.T. INDEX NO. 102

TYPE II

TYPE I

TYPICAL STRAW BALE DETAIL

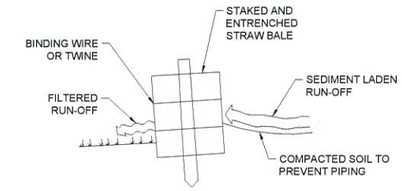

CROSS SECTION OF A PROPERLY INSTALLED STRAW BALE

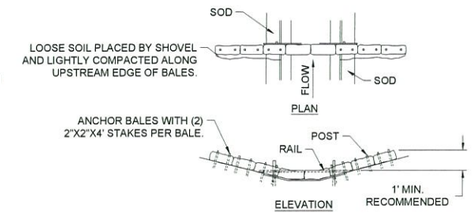

SPACING: BALE BARRIERS FOR PAVED DITCHES SHOULD BE SPACED IN ACCORDANCE WITH CHART I, SHEET 1 OF 3, INDEX NO. 102 OF THE F.D.O.T. ROADWAY AND TRAFFIC DESIGN STANDARDS.

STRAW BALE BARRIER FOR PAVED DITCH

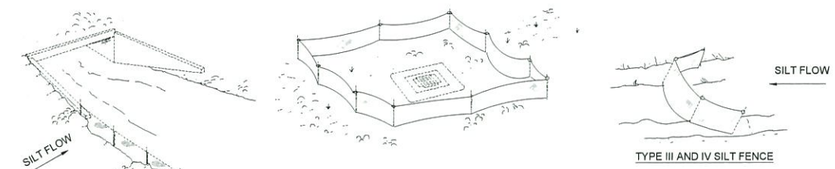

TYPE III OR TYPE IV SILT FENCE PROTECTION AROUND DITCH BOTTOM INLETS.

TYPE III AND IV SILT FENCE

DITCH INSTALLATION AND SPACING FOR TYPE III & TYPE IV FENCE TO BE IN ACCORDANCE WITH SHEET 1 OF 3, OF THE F.D.O.T. INDEX NO. 102

TYPE III OR TYPE IV SILT FENCE

DO NOT DEPLOY IN A MANNER THAT SILT FENCES WILL ACT AS A DAM ACROSS PERMANENT FLOWING WATERCOURSES. SILT FENCES ARE TO BE USED AT UPLAND LOCATIONS AND TURBIDITY BARRIERS USED AT PERMANENT BODIES OF WATER.

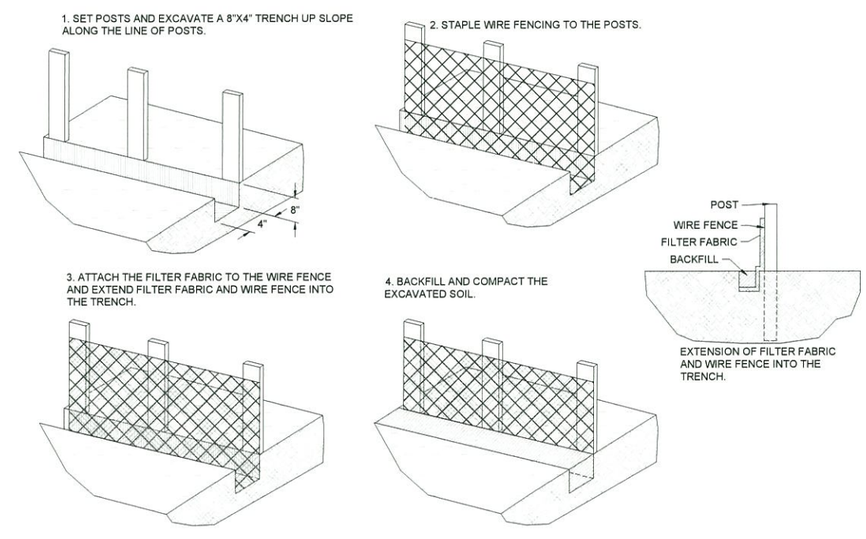

SILT FENCE INSTALLATION DETAILS

TAYLOR ENGINEERING INC.
10151 DEERWOOD PARK BLVD
BLDG 300, SUITE 300
JACKSONVILLE, FLORIDA 32256
(904)-731-7040
1221 AIRPORT ROAD
SUITE 210
DESTIN, FL 32541
(850) 460-7040
CERTIFICATE OF AUTHORIZATION # 8191

SEAL

KEITH A. KNIGHT LICENSE No 58084 8-8-18 STATE OF FLORIDA PROFESSIONAL ENGINEER

KEITH A. KNIGHT P.E. # 58084

PROJECT TITLE

DREDGED MATERIAL MANAGEMENT AREA BV-52 WEIR, WALKWAY, AND PIPELINE REPLACEMENT
COUNTY, FLORIDA

SUNSHINE STATE ONE CALL OF FLORIDA
SUNSHINE 811 - ALWAYS CALL 811
BEFORE YOU DIG
1-800-638-4097

NO	ZONE	REVISIONS / SUBMISSIONS	DATE
2			
2			
2			
1			

PROJECT NO	C2017-029
DATE	AUG 2018
DESIGNED	DSGNBY
DRAWN	AF
CHECKED	CHECKBY
REVIEWED	REVBY
SCALE	AS SHOWN

DRAWING TITLE

EROSION CONTROL DETAILS

X-1

SHEET XX OF XX

ANTON FLEWELLING, 8/8/2018 11:41:36 AM, X:\sys\Projects\2017-029_BV52\Construction\2017-029-M-Erosion.dwg